EBARA

Japanese Technology since 1912

EVMS - Vertical Multistage Pumps

Data Book 50Hz

EVMS
1-3-5-10-15-20-32-45-64-90

VERTICAL MULTISTAGE PUMPS

		Page
1. SPECIFICATIONS ①		
1.1	TYPICAL APPLICATIONS	1
1.2	PERFORMANCE RANGE	2
2. EVMS(.) 1-3-5-10-15-20-32-45-64-90		
2.1	PRODUCT FEATURES	3
2.2	PRODUCT SPECIFICATIONS	4
2.3	SHAFT SEAL	6
2.4	TYPE KEY and NAMEPLATE	8
2.5	PERFORMANCE RANGE	10
2.6	CURVE SPECIFICATIONS	11
2.7	SELECTION CHART	12
2.8	EVMS(L)1	16
	EVMSG1	22
2.9	EVMS(L)3	28
	EVMSG3	34
2.10	EVMS(L)5	40
	EVMSG5	46
2.11	EVMS(L)10	52
	EVMSG10	58
2.12	EVMS(L)15	64
	EVMSG15	70
2.13	EVMS(L)20	76
	EVMSG20	82
2.14	EVMS(L)32	88
	EVMSG32	96
2.15	EVMS(L)45	104
	EVMSG45	112
2.16	EVMS(L)64	120
	EVMSG64	128
2.17	EVMS(L)90	136
	EVMSG90	144
3. PACKING		
3.1	PACKING DRAWING	152
3.2	PACKING DATA	154
4. MOTOR DATA		
4.1	GENERAL and NOISE DATA	158
4.2	TECHNICAL MOTOR DATA	159

① click INDEX to jump CORRESPONDING SECTION
② click ☰ to go back to INDEX

EBARA Pumps Europe S.p.A. reserves the right to make changes without prior notice.

VERTICAL MULTISTAGE PUMPS

TYPICAL APPLICATIONS

INDUSTRY	BUILDING SERVICE	WATER SUPPLY
• **Water treatment** reverse osmosis ultra-filtration water purification micro-filtration softening. ionizing and demineralising systems swimming pools separators • **Boiler feeding** steam systems condensate systems • **Wash and clean** vehicle washing systems industrial part washing laundry systems supply of liquids with acids and bases supply of chemical liquids • **Chilling** handling of refrigerants for cooling thermal control systems industrial cooling laser cooling • **Machine tooling** cooling lubricant supply for tooling machines • **Pressure boosting** pressure boosting for industrial use • **Food & Beverage** food washing systems bottle wash systems • **Pharmaceutical industries** • **Marine applications** freshwater. deckwash. high fog and fire fighting on ships	• **Pressure boosting** pressure boosting for buildings pressure boosting for high rise buildings/hotels • **Sprinkler systems** • **Fire fighting systems** jockey pump • **District heating** • **Heat exchangers / fan heaters** • **Air conditioning systems** • **Heating systems**	• **Water treatment** water treatment plants filtration water treatment plants transfer • **Pressure boosting** transfer from water treatment plants (mains) • **Irrigation** golf course / sport fields irrigation • **Agriculture** sprinkler irrigation drip irrigation

EBARA Pumps Europe S.p.A. reserves the right to make changes without prior notice.

PERFORMANCE RANGE
EVMS(.)1-3-5-10-15-20-32-45-64-90

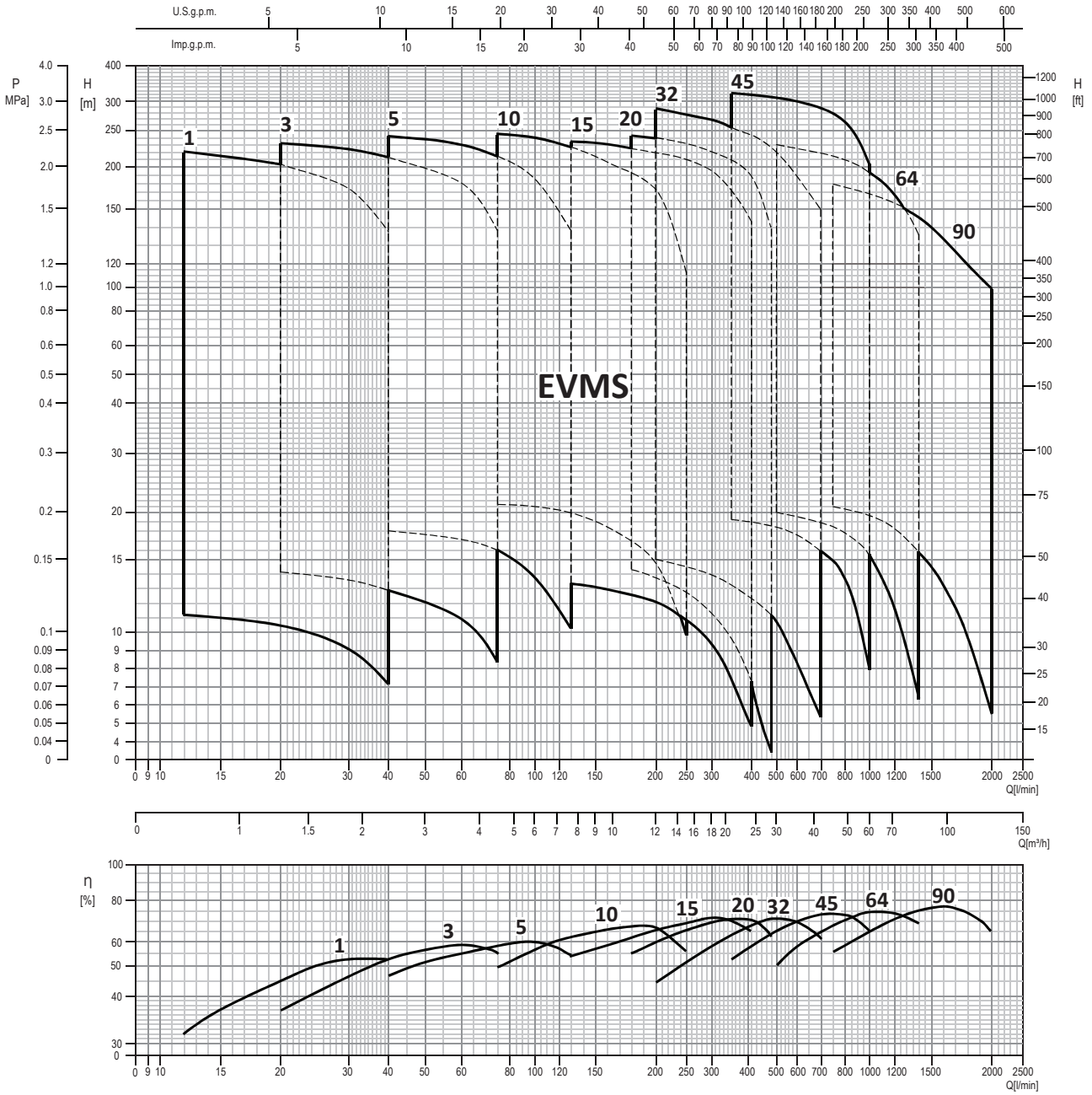

EBARA Pumps Europe S.p.A. reserves the right to make changes without prior notice.

PRODUCT FEATURES

[General]

1. **Pump Type**
   The **EVMS** is Non-self-priming, vertical multistage in line, centrifugal pumps.

2. **Model range**
   The EVMS comes in **1,3,5,10,15,20,32,45,64 and 90 m³/h** flow sizes for the majority market needs.

3. **Maximum operating pressure**
   The EVMS can be operated **at 16, 25, 30 bar or 35 bar as maximum.**

4. **Operating liquid temperature range**
   The EVMS can be operated **from - 30°C to + 140°C** as the maximum.
   (please contact EBARA in case of -30°C to -15°C, or 120-140°C)

5. **Material options**
   AISI 304, AISI 316L and Cast iron versions are available.

6. **Motor**
   The EVMS can be coupled with **the commercial motors** that are acquired in the markets.
   The EVMS is provide as the electric pumps with IE3 motors for the over 0.75 kW.
   PTC sensor pre-installed for motors of 1.5 kW and above.
   Unlosable screw and sealing from 0.75 kW to 45 kW are standard for terminal box fixing.

7. **Certifications**

	Drinking water approval					**Atmospheres explosibles approval**
	DM174/2004	ACS	DVGW *	WRAS **	PZH	ATEX 2014/34/UE
Mechanical seal	SiC/Carbon_ EPDM	SiC/Carbon_ EPDM	All variations with EPDM on page 6-7	SiC/Carbon_ EPDM	All variations with EPDM on page 6-7	All variations on page 6-7
EVMSG	●	-	-	-	●	●
EVMS	●	●	●	●	●	●
EVMSL	●	●	●	●	●	●

Note: * DVGW W270 is certified for elastomers. Reg. Nr. DW-5253CR0217
KTW is certified for organic components.
** only for EVMS(.)1-20

● Standard

8. **Conform to the provisions of the European directives** CE EuP/ErP

[Main Product Features]

1. **Innovative hydraulic solutions**
   - The **Commercial motors** can be fitted to all of the pump models without any modifications thanks to low pump axial thrust load.
   - The low axial thrust load impellers can ensure **long life of the motor bearings**.
   - **High pump efficiency** classified in MEI > 0.7 for all models.

2. **Energy saving**
   - The **high efficiency IE3 motors** starting from 0.75 kW complied with the EuP 2005/32/EC and ErP 2009/125/EC directives.
   - **The VFD (Variable frequency drive)** and **the commercial sensor** can be directly mounted on EVMS to **maintain physical constant operations** such as pumping pressure depending on the conditions of use.

3. **Piping connection options**
   - The various pipe connections are available depending on the application requirements **Oval flange / Round flange / Loose flange / Victaulic® connection / Clamp connection**.
   - The external dimensions can be adjusted to the replacement of the existing pump in the wide majority.

4. **Shaft seal solutions**
   - Silicon carbide inclusions with graphite can be used as **dry lubricant to reduce friction**.
   - It's conforming to EN12756 (ex DIN 24960)

5. **Easy maintenance**
   - **The cartridge mechanical seal** enables **the plug in replacement** of the shaft seal without disassembling the motor bracket.
   - **The spacer coupling** allows easy maintenance without having to remove heavy motors over 5.5 kW

6. **Smart plug solutions**
   Air ventilation plug / Water filling & sensor plug / Commercial sensor fitting / Measurements for suction and discharge pressure / drain.

EBARA Pumps Europe S.p.A. reserves the right to make changes without prior notice.

PRODUCT SPECIFICATIONS
EVMS(.)1-3-5-10-15-20

PUMP																				
Version			**EVMSG**						**EVMS**						**EVMSL**					
Operating range	Nominal flow rate (m³/h)		1	3	5	10	15	20	1	3	5	10	15	20	1	3	5	10	15	20
	Maximum working pressure		1.6 / 2.5 MPa (16 / 25 bar)																	
	Liquid temperature range		-30ºC to 140ºC (please contact EBARA in case of -30°C to -15°C, or 120-140°C)																	
Key Components Material	Impeller		EN 1.4301 (AISI 304)												EN 1.4404 (AISI 316L)					
	Intermediate casing		EN 1.4301 (AISI 304)												EN 1.4404 (AISI 316L)					
	Liner ring		EN 1.4301 (AISI 304) + PPS												EN 1.4404 (AISI 316L) + PPS					
	Bottom casing		Cast Iron						EN 1.4301 (AISI 304)						EN 1.4404 (AISI 316L)					
	Casing cover		EN 1.4301 (AISI 304)												EN 1.4404 (AISI 316L)					
	Shaft	EN 1.4301 (AISI 304)	EVMSG / EVMS 1-3-10 , EVMSG / EVMS 5-15-20 (depend on models)																	
		EN 1.4404 (AISI 316L)	EVMSL 1-3-10 , EVMSL 5-15-20 (depend on models)																	
		EN 1.4462 (AISI 329A)	EVMSG / EVMS / EVMSL 5-15-20 (depend on models)																	
	Shaft sleeve bearing		Tungsten carbide																	
	Shaft Seal		See the shaft seal options																	
	O-ring	EPDM	●	●	●	●	●	●	●	●	●	●	●	●	●	●	●	●	●	●
		FPM	●	●	●	●	●	●	●	●	●	●	●	●	●	●	●	●	●	●
	Outer casing		EN 1.4301 (AISI 304)												EN 1.4404 (AISI 316L)					
	Motor Bracket		Cast Iron																	
	Tie rod		EN 1.4057 (AISI 431)																	
	Coupling	up to 4.0 kW	Die cast aluminium																	
		from 5.5 kW	Cast Iron																	
	Base		Cast Iron						Die cast aluminium											
Pipe connection	Oval flange	up to 16 bar	●	●	●	●	●	●	●	●	●	●	●	●	●	●	●	●	●	●
	Round flange (DIN)	up to 16 bar	●	●	●	●	●	●	●	●	●	●	●	●	●	●	●	●	●	●
		from 16 bar to 25 bar	●	●	●	●	●	●	●	●	●	●	●	●	●	●	●	●	●	●
	Loose round flange (DIN)	up to 16 bar							●	●	●	●	●	●	●	●	●	●	●	●
		from 16 bar to 25 bar							●	●	●	●	●	●	●	●	●	●	●	●
	Victaulic®	up to 16/25 bar							●	●	●	●	●	●	●	●	●	●	●	●
	Clamp	up to 16/25 bar							●	●	●	●	●	●	●	●	●	●	●	●

● Available

MOTOR			
Power Source	Frequency	50 Hz	
	Phase	Single Phase	Three Phase
	Power rating	0.37 ÷ 2.2 kW / 0.5 ÷ 3.0 HP	0.37 ÷ 18.5 kW / 0.5 ÷ 25 HP
	Voltage	230 ± 10% V	230/400 ± 10% V (up to 4.0 kW) 400/690 ± 10% V (above 5.5 kW)
Type	Type	IC411 - TEFC	
	Efficiency Level	from 0.37 kW up to 2.2 kW	- : from 0.37 kW up to 0.55 kW IE3 : above 0.75 kW
	No° of poles	2	
	Protection degree	IP55 : up to 11 kW IP56 : above 15 kW	
	Insulation Class	F (temperature rise class B)	
Others	Thermal Protection	-	PTC sensor pre-installed for motors of 1.5 kW and above
	Casing Material	Aluminium	
	Flange mount (IEC motor)	IM B14 : up to 4.0 kW IM B5 : above 5.5 kW	
	Terminal Box fixing	-	Unlosable screw and sealing from 0.75 kW to 18.5 kW

EBARA Pumps Europe S.p.A. reserves the right to make changes without prior notice.

PRODUCT SPECIFICATIONS
EVMS(.)32-45-64-90

PUMP														
Version			EVMSG				EVMS				EVMSL			
Operating range	Nominal flow rate (m³/h)		32	45	64	90	32	45	64	90	32	45	64	90
	Maximum working pressure		1.6 / 2.5 / 3.0 / 3.5 MPa (16 / 25 / 30 / 35 bar)											
	Liquid temperature range		-30ºC to 140ºC (please contact EBARA in case of -30°C to -15°C, or 120-140°C)											
Key Components Material *	Impeller		EN 1.4301 (AISI 304)								EN 1.4404 (AISI 316L)			
	Intermediate casing		EN 1.4301 (AISI 304)								EN 1.4404 (AISI 316L)			
	Liner ring		EN 1.4301 (AISI 304) + PPS								EN 1.4404 (AISI 316L) + PPS			
	Bottom casing		Cast Iron EN GJL-250 EN 1561 (for EVMSG32 and EVMSG45-90 up to 16 bar) Cast Iron EN GJS 400-15 EN 1563 (for EVMSG45-90 above 25 bar)				EN 1.4308 (ASTM CF8)				EN 1.4408 (ASTM CF8M)			
	Casing cover		EN 1.4301 (AISI 304)								EN 1.4404 (AISI 316L)			
	Shaft	EN 1.4301 (AISI 304)	EVMSG / EVMS 32-45-64-90 (depend on models)											
		EN 1.4404 (AISI 316L)	EVMSL 32-45-64 (depend on models)											
		EN 1.4462 (AISI 329A)	EVMSL 45-64-90 (depend on models)											
	Shaft sleeve bearing		Tungsten carbide											
	Shaft Seal		See the shaft seal options											
	O-ring	EPDM	●	●	●	●	●	●	●	●	●	●	●	●
		FPM	●	●	●	●	●	●	●	●	●	●	●	●
	Outer casing		EN 1.4301 (AISI 304)								EN 1.4404 (AISI 316L)			
	Motor Bracket		Cast Iron EN GJS 400-15 EN 1563											
	Tie rod		EN 1.4057 (AISI 431)											
	Coupling	up to 4.0 kW	Die cast Aluminium EN AB-AISI11 Cu2 (Fe)											
		from 5.5 kW to 30 kW	Cast Iron EN GJL250 EN 1561											
		above 37 kW	Carbon Steel											
	Base		Cast Iron EN GJL200 EN 1561											
Pipe connection	Round flange (DIN)		●	●	●	●								
	Louse round flange (DIN)						●	●	●	●	●	●	●	●

● Available

MOTOR		
Power Source	Frequency	50 Hz
	Phase	Three Phase
	Power rating	1.5 ÷ 45 kW / 2.0 ÷ 60 HP
	Voltage	230/400 ± 10% V (up to 4.0 kW) 400/690 ± 10% V (above 5.5 kW)
Type	Type	IC411 - TEFC
	Efficiency Level	IE3
	No° of poles	2
	Protection degree	IP55 : up to 11 kW IP56 : above 15 kW
	Insulation Class	F (temperature rise class B)
Others	Thermal Protection	PTC
	Casing Material	Aluminium : up to 30 KW Cast Iron : above 37 KW
	Flange mount (IEC motor)	IM B14 : up to 4.0 kW IM B5 : above 5.5 kW
	Terminal Box fixing	Unlosable screw and sealing from 1.5 kW to 45 kW

EBARA Pumps Europe S.p.A. reserves the right to make changes without prior notice.

SHAFT SEAL
EVMS(.)1-3-5-10-15-20

1. Shaft Seal

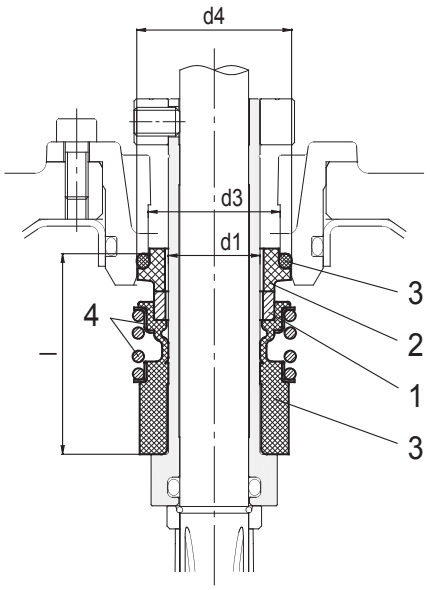

up to 16 bar
Cartridge Unbalanced type

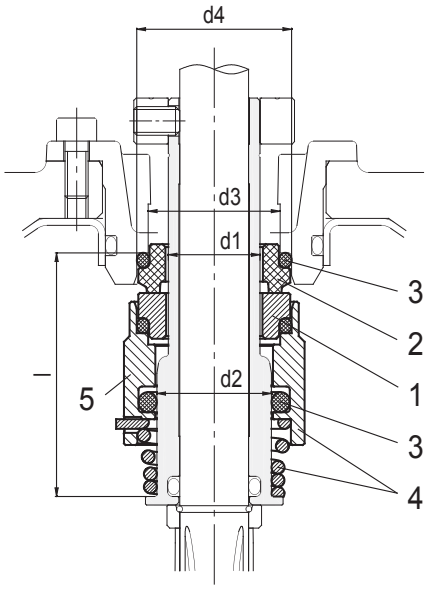

up to 25 bar
Cartridge Balanced type

2. Type of Shaft Seal and Dimensions [mm]

Type key	Availability	Max operating pressure	Max operating temperature	Shaft seal type		Shaft seal material								
				Cartridge		1		2		3		4	5	
				Type	Code	Rotating part	Code	Stationary part	Code	Elastomers	Code	Compression spring	Collar	Code
Q1BEG	●	16 bar	- 30°C to + 120°C	Unbalanced	(-)	SiC	(Q1)	Carbon	(B)	EPDM	(E)	AISI 316		(G)
BQ1VG	●	16 bar	- 30°C to + 80°C	Unbalanced	(-)	Carbon	(B)	SiC	(Q1)	FPM	(V)	AISI 316		(G)
HQ1BEG	●	25 bar	- 30°C to + 140°C	Balanced	(H)	SiC	(Q1)	Carbon	(B)	EPDM	(E)	AISI 316		(G)
HQ1BVG	●	25 bar	- 30°C to + 80°C	Balanced	(H)	SiC	(Q1)	Carbon	(B)	FPM	(V)	AISI 316		(G)
HQgQ1EG	●	25 bar	- 30°C to + 140°C	Balanced	(H)	SiC with graphite	(Qg)	SiC	(Q1)	EPDM	(E)	AISI 316		(G)
HQgQ1VG	●	25 bar	- 30°C to + 80°C	Balanced	(H)	SiC with graphite	(Qg)	SiC	(Q1)	FPM	(V)	AISI 316		(G)

● Available

Pump model	Shaft seal type		Max operating pressure	d1 [mm]	d2 [mm]	d3 [mm]	d4 [mm]	l [mm]
EVMS 1/3/5	Cartridge	Unbalanced	16 bar	16	-	23	27	35
		Balanced	25 bar		20			42.5
EVMS 10/15/20	Cartridge	Unbalanced	16 bar	20	-	29	35	37.5
		Balanced	25 bar		24			45

EBARA Pumps Europe S.p.A. reserves the right to make changes without prior notice.

SHAFT SEAL
EVMS(.)32-45-64-90

1. Shaft Seal

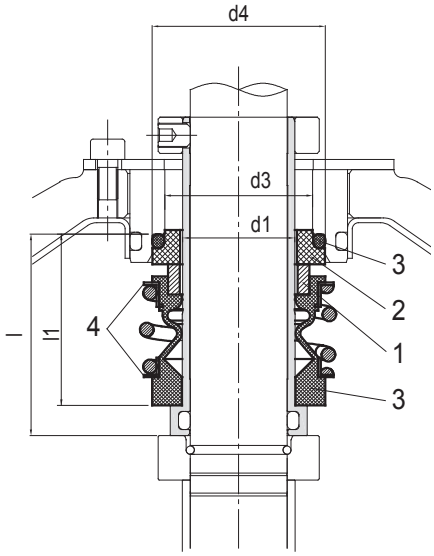

up to 16 bar
Cartridge Unbalanced type

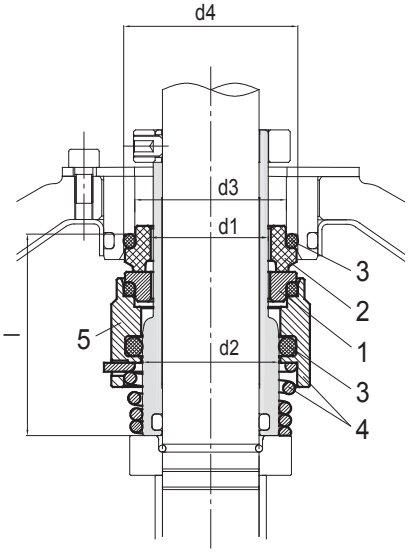

up to 25 bar
Cartridge Balanced type

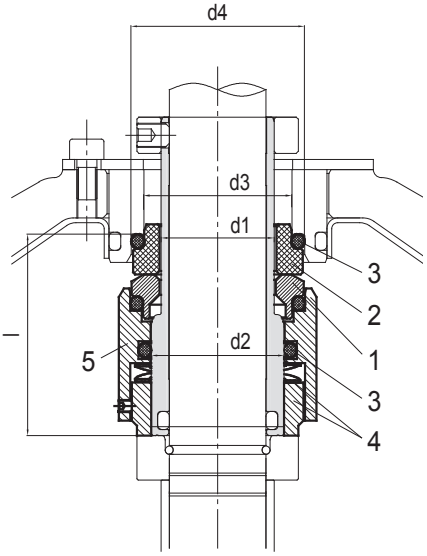

up to 35 bar
Cartridge Balanced type

2. Type of Shaft Seal and Dimensions [mm]

Type key	Availability	Max operating pressure	Max operating temperature	Shaft seal type		Shaft seal material								
				Cartridge		1		2		3		4	5	
				Type	Code	Rotating part	Code	Stationary part	Code	Elastomers	Code	Compression spring	Collar	Code
BQ1EG	●	16 bar	- 30°C to + 120°C	Unbalanced	(-)	Carbon	(B)	SiC	Q1	EPDM	(E)	AISI 316		(G)
BQ1VG	●	16 bar	- 30°C to + 80°C	Unbalanced	(-)	Carbon	(B)	SiC	Q1	FPM	(V)	AISI 316		(G)
HQ1BEG	●	25/35 bar	- 30°C to + 140°C	Balanced	(H)	SiC	(Q1)	Carbon	(B)	EPDM	(E)	AISI 316		(G)
HQ1BVG	●	25/35 bar	- 30°C to + 80°C	Balanced	(H)	SiC	(Q1)	Carbon	(B)	FPM	(V)	AISI 316		(G)
HQgQ1EG	●	25/35 bar	- 30°C to + 140°C	Balanced	(H)	SiC with graphite	(Qg)	SiC	(Q1)	EPDM	(E)	AISI 316		(G)
HQgQ1VG	●	25/35 bar	- 30°C to + 80°C	Balanced	(H)	SiC with graphite	(Qg)	SiC	(Q1)	FPM	(V)	AISI 316		(G)

● Available

Pump model	Shaft seal type		Max operating pressure	d1 [mm]	d2 [mm]	d3 [mm]	d4 [mm]	l [mm]	l1 [mm]
EVMS 32/45/64/90	Cartridge	Unbalanced	16 bar	28	-	37	43	50	42.5
		Balanced	25 bar		33				-
		Balanced	35 bar						

EBARA Pumps Europe S.p.A. reserves the right to make changes without prior notice.

TYPE KEY
EVMS(.)1-3-5-10-15-20

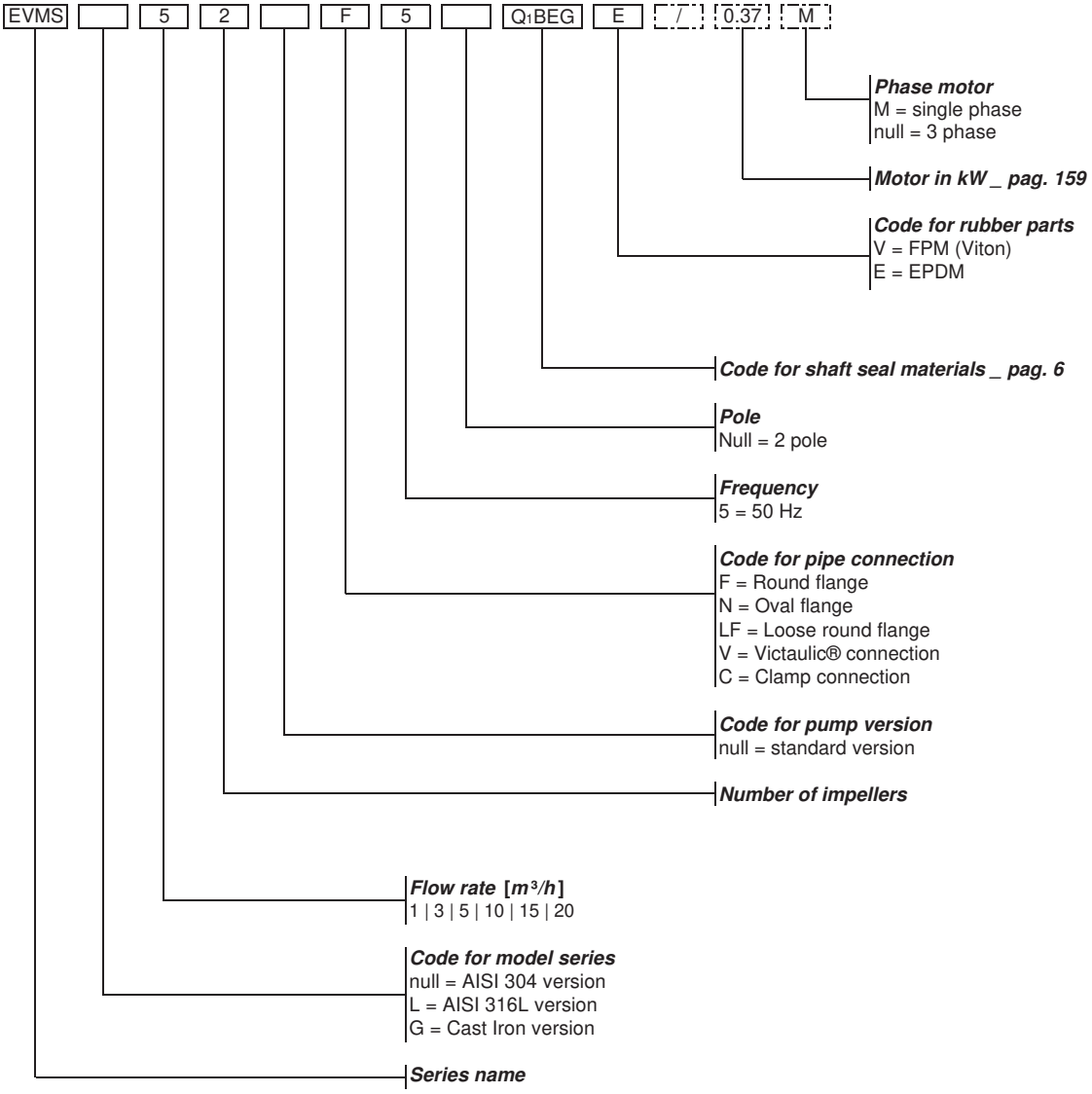

Example for **pump without motor**:
EVMS5 2F5Q1BEG E

Example for **pump with motor**:
EVMS5 2F5Q1BEG E/0.37M

NAMEPLATE

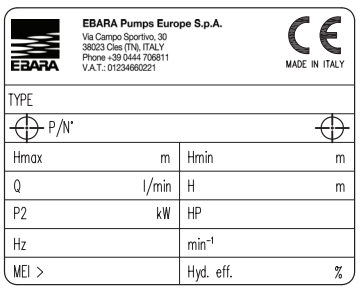

"TYPE"	Pump model
"P/N°"	Pump item number
"Hmax"	Maximum head
"Hmin"	Minimum head
"Q"	Indicates upper and lower flow rate limits
"H"	Indicates head limits corresponding to minimum and maximum flow rate
"P2"	Rated power of the motor (output at shaft)
"HP"	Rated power of the motor expressed in HP (Horse Power)
"Hz"	Frequency
"min-1"	Speed of rotation
"MEI"	Index of the pump's quality in relation to its efficiency
"Hyd. Eff."	Hydraulic efficiency of the pump

EBARA Pumps Europe S.p.A. reserves the right to make changes without prior notice.

TYPE KEY
EVMS(.)32-45-64-90

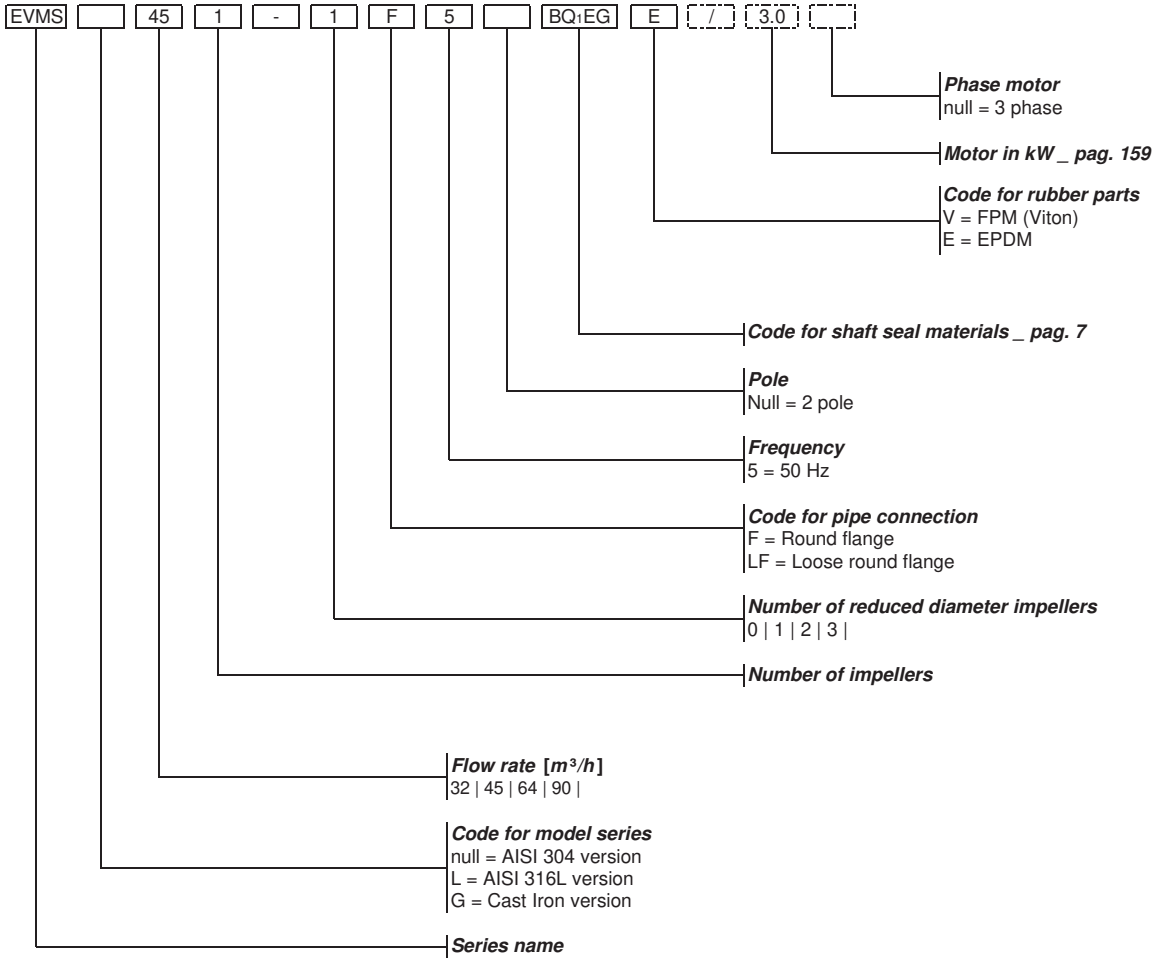

Example for **pump without motor**:
EVMS45 1-1F5BQ1EG E

Example for **pump with motor**:
EVMS45 1-1F5BQ1EG E/3.0

NAMEPLATE

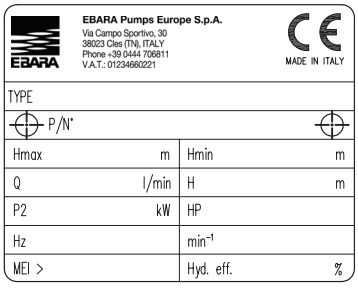

"TYPE"	Pump model
"P/N°"	Pump item number
"Hmax"	Maximum head
"Hmin"	Minimum head
"Q"	Indicates upper and lower flow rate limits
"H"	Indicates head limits corresponding to minimum and maximum flow rate
"P2"	Rated power of the motor (output at shaft)
"HP"	Rated power of the motor expressed in HP (Horse Power)
"Hz"	Frequency
"min-1"	Speed of rotation
"MEI"	Index of the pump's quality in relation to its efficiency
"Hyd. Eff."	Hydraulic efficiency of the pump

EBARA Pumps Europe S.p.A. reserves the right to make changes without prior notice.

PERFORMANCE RANGE
EVMS(.)1-3-5-10-15-20-32-45-64-90

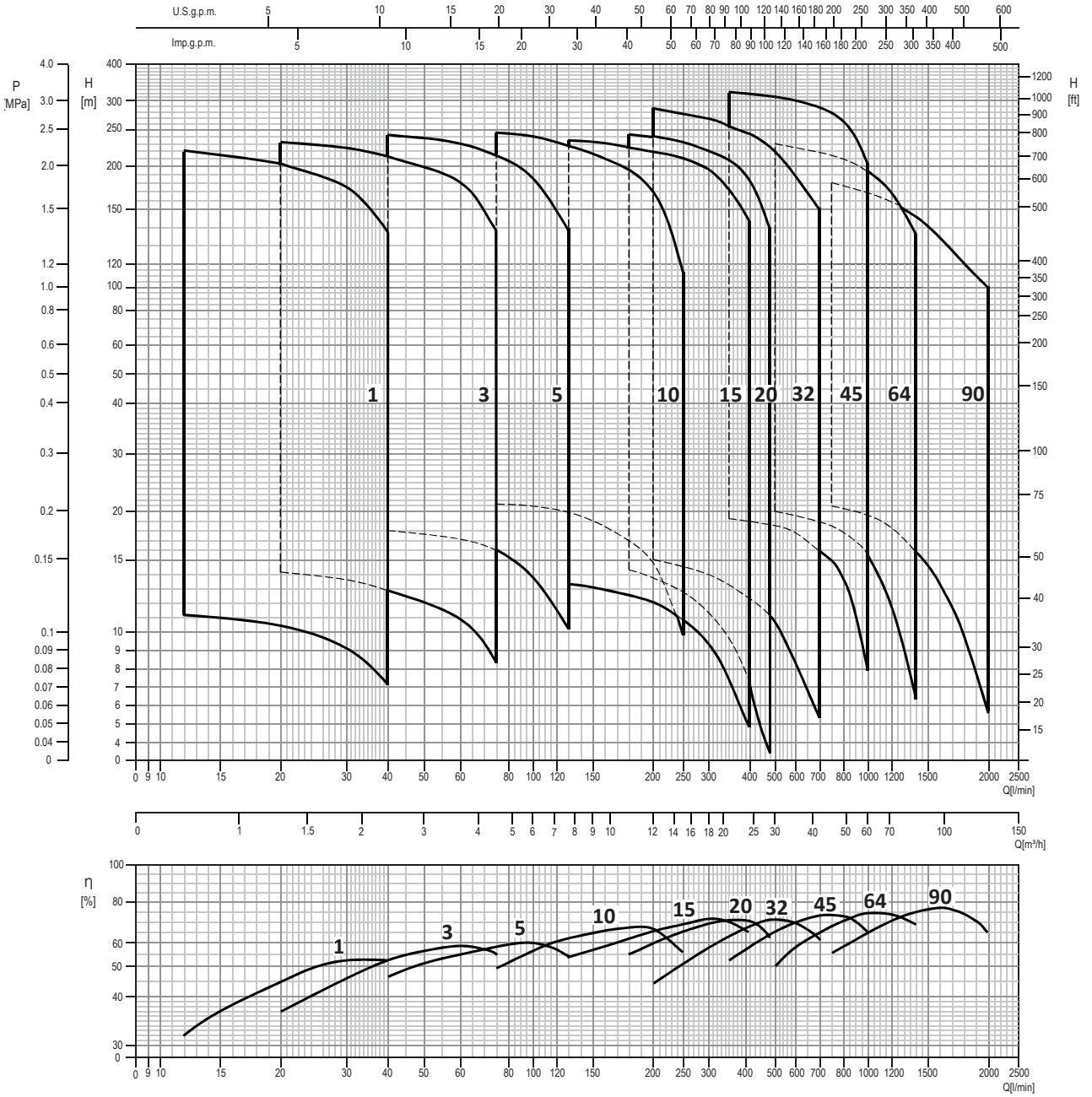

EBARA Pumps Europe S.p.A. reserves the right to make changes without prior notice.

CURVE SPECIFICATIONS

The specifications below qualify the curves shown on the following pages.

Tolerances according to ISO 9906:2012 - Grade 3B.
Performance curves are defined with the following rotation speed (nominal rotation speed of the motor):
- up to 15 kW: 2900 rpm
- from 18.5 kW up to 30 kW: 2950 rpm
- 37 kW and 45 kW: 2975 rpm

Measurements were carried out with clean water at 20°C of temperature and with a kinematic viscosity of ν = 1 mm2/s (1 cSt).
The NPSH curve is an average curve obtained in the same conditions of performance curves.
During the pump selection. consider to get a safety margin of at least 0.5 m.
The continuous curves indicate the recommended working range. The dotted curve is only a guide.
In order to avoid the risk of over-heating. the pumps should not be used at a flow rate below 10% of best efficiency point.

Symbols explanation:

Q	-	volume flow rate
H	-	total head
P_2	-	pump power input (shaft power)
η	-	pump efficiency
NPSH	-	net positive suction head required by the pump
MEI	-	minimum efficiency index
$\varnothing D_2$	-	P_2 with full diameter
$\varnothing D_2$*	-	P_2 with reduced diameter

The minimum efficiency index (MEI) is a measure of the quality of a pump size in respect to its mean efficiency. The minimum efficiency index is based on the hydraulic efficiency and on the head at the best efficiency point.

The efficiency of a pump with trimmed impeller is usually lower than that of a pump with the full impeller diameter. The trimming of the impeller will adapt the pump to a fixed duty point. leading to a reduced energy consumption. The minimum efficiency index (MEI) is based on the full impeller diameter.

The operation of these water pumps with variable duty points may be more efficient and economical when controlled. for example. by the use of a variable speed drive that matches the pump duty to the system.

Information on benchmark efficiency is available at: www.europump.org (Ecodesign section)

Information on benchmark efficiency graph for MEI = 0.7 for the pump are available at:
www.europump.org/efficiencycharts (refer to "Multistage Vertical 2900 rpm")

Minimum efficiency index (MEI)

Pump type	MEI
EVMS(.)1	> 0.70
EVMS(.)3	> 0.70
EVMS(.)5	> 0.70
EVMS(.)10	> 0.70
EVMS(.)15	> 0.70
EVMS(.)20	> 0.70
EVMS(.)32	> 0.70
EVMS(.)45	> 0.70
EVMS(.)64	> 0.70
EVMS(.)90	> 0.70

EBARA Pumps Europe S.p.A. reserves the right to make changes without prior notice.

SELECTION CHART
EVMS(.)1-3-5

	Pump Type		Motor			Maximum working pressure [MPa]	Q=Capacity								
							l/min 0	12	20	30	40	60	75	100	130
			kW	HP	Size		m³/h 0	0.72	1.2	1.8	2.4	3.6	4.5	6	7.8
	Single phase	Three phase					H=Total manometric head in metres								
	EVMS(.)1 2/0.37M	EVMS(.)1 2/0.37	0.37	0.5	71	1.6	11.9	11.2	10.4	9.1	7.1	-	-	-	-
	EVMS(.)1 3/0.37M	EVMS(.)1 3/0.37	0.37	0.5	71	1.6	17.9	16.8	15.6	13.6	10.6	-	-	-	-
	EVMS(.)1 4/0.37M	EVMS(.)1 4/0.37	0.37	0.5	71	1.6	23.8	22.4	20.8	18.2	14.2	-	-	-	-
	EVMS(.)1 5/0.37M	EVMS(.)1 5/0.37	0.37	0.5	71	1.6	30	28	26	22.7	17.7	-	-	-	-
	EVMS(.)1 6/0.37M	EVMS(.)1 6/0.37	0.37	0.5	71	1.6	35.8	33.6	31.2	27.3	21.2	-	-	-	-
	EVMS(.)1 7/0.37M	EVMS(.)1 7/0.37	0.37	0.5	71	1.6	41.5	39.2	36.4	31.8	24.8	-	-	-	-
	EVMS(.)1 8/0.37M	EVMS(.)1 8/0.37	0.37	0.5	71	1.6	47.5	44.5	41.5	36.4	28.3	-	-	-	-
	EVMS(.)1 9/0.55M	EVMS(.)1 9/0.55	0.55	0.75	71	1.6	53.5	50.5	47	41	31.8	-	-	-	-
	EVMS(.)1 10/0.55M	EVMS(.)1 10/0.55	0.55	0.75	71	1.6	59.6	56	52	45.5	35.4	-	-	-	-
	EVMS(.)1 11/0.55M	EVMS(.)1 11/0.55	0.55	0.75	71	1.6	65.5	61.5	57	50	38.9	-	-	-	-
	EVMS(.)1 12/0.55M	EVMS(.)1 12/0.55	0.55	0.75	71	1.6	71.5	67	62.5	54.5	42.5	-	-	-	-
	EVMS(.)1 13/0.55M	EVMS(.)1 13/0.55	0.55	0.75	71	1.6	77.5	73	67.5	59	46	-	-	-	-
1	EVMS(.)1 14/0.75M	EVMS(.)1 14/0.75	0.75	1	80	1.6	83.5	78.5	73	63.5	49.5	-	-	-	-
	EVMS(.)1 16/0.75M	EVMS(.)1 16/0.75	0.75	1	80	1.6	95.5	89.5	83	72.5	56.5	-	-	-	-
	EVMS(.)1 18/1.1M	EVMS(.)1 18/1.1	1.1	1.5	80	1.6	107	101	93.5	82	63.5	-	-	-	-
	EVMS(.)1 20/1.1M	EVMS(.)1 20/1.1	1.1	1.5	80	1.6	119	112	104	91	71	-	-	-	-
	EVMS(.)1 22/1.1M	EVMS(.)1 22/1.1	1.1	1.5	80	1.6	131	123	114	100	78	-	-	-	-
	EVMS(.)1 24/1.1M	EVMS(.)1 24/1.1	1.1	1.5	80	1.6	143	135	125	109	85	-	-	-	-
	EVMS(.)1 26/1.1M	EVMS(.)1 26/1.1	1.1	1.5	80	1.6	155	146	135	118	92	-	-	-	-
	EVMS(.)1 27/1.5M	EVMS(.)1 27/1.5	1.5	2	90	2.5	161	151	140	123	95.5	-	-	-	-
	EVMS(.)1 29/1.5M	EVMS(.)1 29/1.5	1.5	2	90	2.5	173	163	151	132	103	-	-	-	-
	EVMS(.)1 32/1.5M	EVMS(.)1 32/1.5	1.5	2	90	2.5	191	179	166	145	113	-	-	-	-
	EVMS(.)1 34/1.5M	EVMS(.)1 34/1.5	1.5	2	90	2.5	203	191	177	155	120	-	-	-	-
	EVMS(.)1 37/2.2M	EVMS(.)1 37/2.2	2.2	3	90	2.5	221	207	192	168	131	-	-	-	-
	EVMS(.)1 39/2.2M	EVMS(.)1 39/2.2	2.2	3	90	2.5	232	219	203	177	138	-	-	-	-
	EVMS(.)3 2/0.37M	EVMS(.)3 2/0.37	0.37	0.5	71	1.6	14.7	-	14.1	13.6	12.9	10.9	8.3	-	-
	EVMS(.)3 3/0.37M	EVMS(.)3 3/0.37	0.37	0.5	71	1.6	22.1	-	21.1	20.4	19.4	16.4	12.5	-	-
	EVMS(.)3 4/0.37M	EVMS(.)3 4/0.37	0.37	0.5	71	1.6	29.5	-	28.2	27.1	25.8	21.9	16.7	-	-
	EVMS(.)3 5/0.55M	EVMS(.)3 5/0.55	0.55	0.75	71	1.6	36.9	-	35.2	33.9	32.3	27.4	20.9	-	-
	EVMS(.)3 6/0.55M	EVMS(.)3 6/0.55	0.55	0.75	71	1.6	44.2	-	42.5	40.5	38.8	32.8	25	-	-
	EVMS(.)3 7/0.75M	EVMS(.)3 7/0.75	0.75	1	80	1.6	51.5	-	49.5	47.5	45	38.3	29.2	-	-
	EVMS(.)3 8/0.75M	EVMS(.)3 8/0.75	0.75	1	80	1.6	59	-	56.5	54.5	51.5	44	33.4	-	-
	EVMS(.)3 9/1.1M	EVMS(.)3 9/1.1	1.1	1.5	80	1.6	66.5	-	63.5	61	58	49	37.6	-	-
	EVMS(.)3 10/1.1M	EVMS(.)3 10/1.1	1.1	1.5	80	1.6	73.5	-	70.5	68	64.5	54.5	41.5	-	-
	EVMS(.)3 11/1.1M	EVMS(.)3 11/1.1	1.1	1.5	80	1.6	81	-	77.5	74.5	71	60	46	-	-
	EVMS(.)3 12/1.1M	EVMS(.)3 12/1.1	1.1	1.5	80	1.6	88.5	-	84.5	81.5	77.5	65.5	50	-	-
	EVMS(.)3 13/1.5M	EVMS(.)3 13/1.5	1.5	2	90	1.6	96	-	91.5	88	84	71	54.5	-	-
3	EVMS(.)3 14/1.5M	EVMS(.)3 14/1.5	1.5	2	90	1.6	103	-	98.5	95	90.5	76.5	58.5	-	-
	EVMS(.)3 15/1.5M	EVMS(.)3 15/1.5	1.5	2	90	1.6	111	-	106	102	97	82	62.5	-	-
	EVMS(.)3 16/1.5M	EVMS(.)3 16/1.5	1.5	2	90	1.6	118	-	113	109	103	87.5	67	-	-
	EVMS(.)3 17/2.2M	EVMS(.)3 17/2.2	2.2	3	90	1.6	125	-	120	115	110	93	71	-	-
	EVMS(.)3 19/2.2M	EVMS(.)3 19/2.2	2.2	3	90	1.6	140	-	134	129	123	104	79.5	-	-
	EVMS(.)3 21/2.2M	EVMS(.)3 21/2.2	2.2	3	90	1.6	155	-	148	142	136	115	87.5	-	-
	EVMS(.)3 23/2.2M	EVMS(.)3 23/2.2	2.2	3	90	2.5	170	-	162	156	149	126	96	-	-
	EVMS(.)3 24/2.2M	EVMS(.)3 24/2.2	2.2	3	90	2.5	177	-	169	163	155	131	100	-	-
	-	EVMS(.)3 25/3.0	3.0	4	100	2.5	184	-	176	170	161	137	104	-	-
	-	EVMS(.)3 27/3.0	3.0	4	100	2.5	199	-	190	183	174	148	113	-	-
	-	EVMS(.)3 29/3.0	3.0	4	100	2.5	214	-	204	197	187	159	121	-	-
	-	EVMS(.)3 31/3.0	3.0	4	100	2.5	229	-	218	210	200	170	129	-	-
	-	EVMS(.)3 33/3.0	3.0	4	100	2.5	243	-	232	224	213	181	138	-	-
	EVMS(.)5 2/0.37M	EVMS(.)5 2/0.37	0.37	0.5	71	1.6	19	-	-	-	18	17.1	16	13.8	10.2
	EVMS(.)5 3/0.55M	EVMS(.)5 3/0.55	0.55	0.75	71	1.6	28.4	-	-	-	26.9	25.6	23.9	20.7	15.3
	EVMS(.)5 4/0.75M	EVMS(.)5 4/0.75	0.75	1	80	1.6	37.9	-	-	-	35.9	34.1	31.9	27.6	20.4
	EVMS(.)5 5/1.1M	EVMS(.)5 5/1.1	1.1	1.5	80	1.6	47.5	-	-	-	45	42.5	39.9	34.5	25.5
	EVMS(.)5 6/1.5M	EVMS(.)5 6/1.5	1.5	2	90	1.6	57	-	-	-	54	51	48	41.5	30.6
	EVMS(.)5 7/1.5M	EVMS(.)5 7/1.5	1.5	2	90	1.6	66.5	-	-	-	63	59.5	56	48.5	35.7
	EVMS(.)5 8/2.2M	EVMS(.)5 8/2.2	2.2	3	90	1.6	76	-	-	-	72	68	64	55	41
	EVMS(.)5 9/2.2M	EVMS(.)5 9/2.2	2.2	3	90	1.6	85.5	-	-	-	81	77	72	62	46
	EVMS(.)5 10/2.2M	EVMS(.)5 10/2.2	2.2	3	90	1.6	95	-	-	-	90	85.5	80	69	51
5	EVMS(.)5 11/2.2M	EVMS(.)5 11/2.2	2.2	3	90	1.6	104	-	-	-	98.5	94	87.5	76	56
	-	EVMS(.)5 12/3.0	3.0	4	100	1.6	114	-	-	-	108	102	95.5	83	61
	-	EVMS(.)5 13/3.0	3.0	4	100	1.6	123	-	-	-	117	111	104	89.5	66.5
	-	EVMS(.)5 14/3.0	3.0	4	100	1.6	133	-	-	-	126	119	112	96.5	71.5
	-	EVMS(.)5 15/3.0	3.0	4	100	1.6	142	-	-	-	135	128	120	104	76.5
	-	EVMS(.)5 17/4.0	4.0	5.5	112	1.6	161	-	-	-	153	145	136	117	86.5
	-	EVMS(.)5 19/4.0	4.0	5.5	112	2.5	180	-	-	-	171	162	152	131	97
	-	EVMS(.)5 20/4.0	4.0	5.5	112	2.5	190	-	-	-	179	171	160	138	102
	-	EVMS(.)5 23/5.5	5.5	7.5	132	2.5	218	-	-	-	206	196	183	159	117
	-	EVMS(.)5 25/5.5	5.5	7.5	132	2.5	237	-	-	-	224	213	199	173	127
	-	EVMS(.)5 27/5.5	5.5	7.5	132	2.5	256	-	-	-	242	230	215	186	138

1.6 MPa=16 bar; 2.5 MPa=25 bar

EBARA Pumps Europe S.p.A. reserves the right to make changes without prior notice.

SELECTION CHART
EVMS(.)10-15-20

	Pump Type		Motor			Maximum working pressure [MPa]	Q=Capacity												
							l/min	0	75	100	130	150	180	200	250	300	350	400	450	480
			kW	HP	Size		m³/h	0	4.5	6	7.8	9	10.8	12	15	18	21	24	27	28.8
	Single phase	Three phase					H=Total manometric head in metres													
10	EVMS(.)10 2/0.75M	EVMS(.)10 2/0.75	0.75	1	80	1.6	21.8	21.2	20.8	19.7	18.7	16.6	14.9	9.8	-	-	-	-	-
	EVMS(.)10 3/1.5M	EVMS(.)10 3/1.5	1.5	2	90	1.6	32.7	31.8	31.2	29.6	28.0	24.9	22.4	14.7	-	-	-	-	-
	EVMS(.)10 4/2.2M	EVMS(.)10 4/2.2	2.2	3	90	1.6	43.6	42.4	41.7	39.5	37.3	33.2	29.8	19.6	-	-	-	-	-
	EVMS(.)10 5/2.2M	EVMS(.)10 5/2.2	2.2	3	90	1.6	54.5	53	52	49.3	46.7	41.5	37.3	24.6	-	-	-	-	-
	EVMS(.)10 6/2.2M	EVMS(.)10 6/2.2	2.2	3	90	1.6	65.5	63.5	62.5	59	56	50	45	29.5	-	-	-	-	-
	-	EVMS(.)10 7/3.0	3.0	4	100	1.6	76.5	74	73	69	65.5	58	52	34.4	-	-	-	-	-
	-	EVMS(.)10 8/3.0	3.0	4	100	1.6	87.0	84.5	83.5	79	74.5	66.5	59.5	39.3	-	-	-	-	-
	-	EVMS(.)10 9/4.0	4.0	5.5	112	1.6	98	95.5	93.5	89	84	74.5	67	44	-	-	-	-	-
	-	EVMS(.)10 10/4.0	4.0	5.5	112	1.6	109	106	104	98.5	93.5	83	74.5	49	-	-	-	-	-
	-	EVMS(.)10 11/4.0	4.0	5.5	112	1.6	120	116	115	109	103	91.5	82	54	-	-	-	-	-
	-	EVMS(.)10 12/5.5	5.5	7.5	132	1.6	131	127	125	118	112	99.5	89.5	59	-	-	-	-	-
	-	EVMS(.)10 14/5.5	5.5	7.5	132	1.6	153	148	146	138	131	116	104	68.5	-	-	-	-	-
	-	EVMS(.)10 15/5.5	5.5	7.5	132	1.6	163	159	156	148	140	124	112	73.5	-	-	-	-	-
	-	EVMS(.)10 16/7.5	7.5	10	132	2.5	174	169	167	158	149	133	119	78.5	-	-	-	-	-
	-	EVMS(.)10 18/7.5	7.5	10	132	2.5	196	191	187	178	168	149	134	88.5	-	-	-	-	-
	-	EVMS(.)10 19/7.5	7.5	10	132	2.5	207	201	198	188	177	158	142	93.5	-	-	-	-	-
	-	EVMS(.)10 21/7.5	7.5	10	132	2.5	229	222	219	207	196	174	157	103	-	-	-	-	-
	-	EVMS(.)10 22/11	11	15	160	2.5	240	233	229	217	205	183	164	108	-	-	-	-	-
	-	EVMS(.)10 23/11	11	15	160	2.5	251	244	240	227	215	191	172	113	-	-	-	-	-
15	EVMS(.)15 1/1.1M	EVMS(.)15 1/1.1	1.1	1.5	80	1.6	14.9	-	-	13.3	13	12.4	12.1	10.8	9.5	7.5	4.8	-	-
	EVMS(.)15 2/2.2M	EVMS(.)15 2/2.2	2.2	3	90	1.6	29.5	-	-	27.5	27.1	26	26.1	24.9	23.1	20.4	16.8	-	-
	-	EVMS(.)15 3/3.0	3.0	4	100	1.6	44.5	-	-	41.5	40.5	39.7	39.1	37.3	34.7	30.6	25.2	-	-
	-	EVMS(.)15 4/4.0	4.0	5.5	112	1.6	59	-	-	55	54.5	53	52	50	46.5	41	33.6	-	-
	-	EVMS(.)15 5/5.5	5.5	7.5	132	1.6	73.5	-	-	69	68	66	65	62	58	51	42	-	-
	-	EVMS(.)15 6/5.5	5.5	7.5	132	1.6	88.5	-	-	82.5	81.5	79.5	78	74.5	69.5	61	50.5	-	-
	-	EVMS(.)15 7/7.5	7.5	10	132	1.6	103	-	-	96.5	95.0	92.5	91	87	81	71.5	58.5	-	-
	-	EVMS(.)15 8/7.5	7.5	10	132	1.6	118	-	-	110	109	106	104	99.5	92.5	81.5	67	-	-
	-	EVMS(.)15 9/11	11	15	160	1.6	133	-	-	124	122	119	117	112	104	92	75.5	-	-
	-	EVMS(.)15 10/11	11	15	160	1.6	147	-	-	138	136	132	130	124	116	102	84	-	-
	-	EVMS(.)15 11/11	11	15	160	1.6	162	-	-	151	149	146	143	137	127	112	92.5	-	-
	-	EVMS(.)15 12/11	11	15	160	2.5	177	-	-	165	163	159	156	149	139	122	101	-	-
	-	EVMS(.)15 13/11	11	15	160	2.5	191	-	-	179	176	172	169	162	150	133	109	-	-
	-	EVMS(.)15 15/15	15	20	160	2.5	221	-	-	206	203	199	195	187	174	153	126	-	-
	-	EVMS(.)15 17/15	15	20	160	2.5	250	-	-	234	231	225	221	211	197	173	143	-	-
20	EVMS(.)20 1/1.5M	EVMS(.)20 1/1.5	1.5	2	90	1.6	17.2	-	-	-	-	14.3	13.9	12.8	11.3	9.6	7.3	4.3	2.4
	-	EVMS(.)20 2/3.0	3.0	4	100	1.6	33.7	-	-	-	-	30.4	29.9	28.9	27.7	26.2	23.6	19.9	17.4
	-	EVMS(.)20 3/4.0	4.0	5.5	112	1.6	50.5	-	-	-	-	46	45	43.4	41.6	39.2	35.5	29.9	26.2
	-	EVMS(.)20 4/5.5	5.5	7.5	132	1.6	67.4	-	-	-	-	61	60	58	55.4	52.3	47.3	39.8	34.9
	-	EVMS(.)20 5/7.5	7.5	10	132	1.6	84.2	-	-	-	-	76.0	75	72.3	69.3	65.4	59	49.8	43.6
	-	EVMS(.)20 6/7.5	7.5	10	132	1.6	101	-	-	-	-	91.2	90	87	83.1	78.5	71	59.7	52.3
	-	EVMS(.)20 7/11	11	15	160	1.6	118	-	-	-	-	106	105	101	97	91.5	82.7	70	61.1
	-	EVMS(.)20 8/11	11	15	160	1.6	135	-	-	-	-	122	120	116	111	105	95	80	70
	-	EVMS(.)20 9/11	11	15	160	1.6	152	-	-	-	-	137	135	130	125	118	106	89.6	79
	-	EVMS(.)20 10/11	11	15	160	2.5	168	-	-	-	-	152	150	145	139	131	118	100	87
	-	EVMS(.)20 11/15	15	20	160	2.5	185	-	-	-	-	167	165	159	152	144	130	110	96
	-	EVMS(.)20 12/15	15	20	160	2.5	202	-	-	-	-	182	179	173	166	157	142	119	105
	-	EVMS(.)20 13/15	15	20	160	2.5	219	-	-	-	-	198	194	188	180	170	154	129	113
	-	EVMS(.)20 14/18.5	18.5	25	160	2.5	244	-	-	-	-	221	217	210	202	191	175	149	130
	-	EVMS(.)20 15/18.5	18.5	25	160	2.5	262	-	-	-	-	237	232	225	216	205	186	159	141
	-	EVMS(.)20 16/18.5	18.5	25	160	2.5	279	-	-	-	-	252	248	240	231	218	199	170	150

1.6 MPa=16 bar; 2.5 MPa=25 bar

EBARA Pumps Europe S.p.A. reserves the right to make changes without prior notice.

SELECTION CHART
EVMS(.)32-45

	Pump Type	Motor			Maximum working	Q=Capacity								
		kW	HP	Size	pressure	l/min 0	200	350	500	600	700	800	900	1000
						m³/h 0	12	21	30	36	42	48	54	60
	Three phase				(MPa)	H=Total manometric head in metres								
32	EVMS(.)32 1-1/1.5	1.5	2	90	1.6	17.1	15	12.7	10.8	8.3	5.3	-	-	-
	EVMS(.)32 1-0/2.2	2.2	3	90	1.6	20.2	18.8	16.0	13.2	11	7.9	-	-	-
	EVMS(.)32 2-2/3.0	3.0	4	100	1.6	34.5	31	28.5	23.5	19.2	13.4	-	-	-
	EVMS(.)32 2-0/4.0	4.0	5.5	112	1.6	43	40	34.8	28.5	23.8	17.9	-	-	-
	EVMS(.)32 3-2/5.5	5.5	7.5	132	1.6	57	52	46	37.8	31.4	23.3	-	-	-
	EVMS(.)32 3-0/5.5	5.5	7.5	132	1.6	63	59	52	43	36.4	28.2	-	-	-
	EVMS(.)32 4-2/7.5	7.5	10	132	1.6	76.5	71	62	52.5	44	33.3	-	-	-
	EVMS(.)32 4-0/7.5	7.5	10	132	1.6	83.5	79	70	58	49.5	38.7	-	-	-
	EVMS(.)32 5-2/11	11	15	160	1.6	100	92.5	80	66.5	55.5	41.5	-	-	-
	EVMS(.)32 5-0/11	11	15	160	1.6	105	99	87	72.5	62	48	-	-	-
	EVMS(.)32 6-2/11	11	15	160	1.6	119	111	98	81	68	51.5	-	-	-
	EVMS(.)32 6-0/11	11	15	160	1.6	127	121	104	86.5	74	57.5	-	-	-
	EVMS(.)32 7-2/15	15	20	160	1.6	139	130	115	95.5	80.5	62	-	-	-
	EVMS(.)32 7-0/15	15	20	160	1.6	146	138	122	101	86	67	-	-	-
	EVMS(.)32 8-2/15	15	20	160	2.5	160	150	132	110	93.5	72.5	-	-	-
	EVMS(.)32 8-0/15	15	20	160	2.5	167	159	140	117	99.5	79.5	-	-	-
	EVMS(.)32 9-2/15	15	20	160	2.5	182	171	151	127	108	83.5	-	-	-
	EVMS(.)32 9-1/15	15	20	160	2.5	187	178	157	132	115	90	-	-	-
	EVMS(.)32 10-2/18.5	18.5	25	160	2.5	210	198	176	147	126	100	-	-	-
	EVMS(.)32 10-0/18.5	18.5	25	160	2.5	216	206	180	151	130	104	-	-	-
	EVMS(.)32 11-2/18.5	18.5	25	160	2.5	233	219	194	163	139	112	-	-	-
	EVMS(.)32 11-1/18.5	18.5	25	160	2.5	239	228	201	169	145	116	-	-	-
	EVMS(.)32 12-2/22	22	30	180	3.0	253	238	210	178	153	121	-	-	-
	EVMS(.)32 12-0/22	22	30	180	3.0	255	243	215	182	155	126	-	-	-
	EVMS(.)32 13-2/22	22	30	180	3.0	272	257	229	195	167	136	-	-	-
	EVMS(.)32 13-0/22	22	30	180	3.0	278	264	235	200	171	139	-	-	-
	EVMS(.)32 14-2/30	30	40	200	3.0	290	276	247	212	182	144	-	-	-
	EVMS(.)32 14-0/30	30	40	200	3.0	300	285	253	218	186	152	-	-	-
45	EVMS(.)45 1-1/3.0	3.0	4	100	1.6	25.1	-	19.2	18.3	17.5	15.9	13.9	11	7.9
	EVMS(.)45 1-0/4.0	4.0	5.5	112	1.6	28.4	-	24.7	23.2	22.1	20.4	18.6	16.7	14.3
	EVMS(.)45 2-2/5.5	5.5	7.5	132	1.6	48.5	-	38.5	36.8	35.1	31.7	27.7	22.6	16.3
	EVMS(.)45 2-0/7.5	7.5	10	132	1.6	54	-	49	46.5	44.5	41.5	38.1	33.6	28.7
	EVMS(.)45 3-2/11	11	15	160	1.6	77	-	63	60	57	52	46.5	39.4	30.8
	EVMS(.)45 3-0/11	11	15	160	1.6	81	-	73	69.5	67	63	57.5	50.5	44
	EVMS(.)45 4-2/15	15	20	160	1.6	102	-	87.5	83	79.5	73.5	66	56	45
	EVMS(.)45 4-0/15	15	20	160	1.6	105	-	97.5	92	89.5	83.5	76.5	68.5	58
	EVMS(.)45 5-2/18.5	18.5	25	160	1.6	130	-	116	110	106	99.5	90	79	65
	EVMS(.)45 5-0/18.5	18.5	25	160	1.6	134	-	125	119	116	109	101	90.5	78.5
	EVMS(.)45 6-2/22	22	30	180	2.5	158	-	140	133	130	122	111	98	81.5
	EVMS(.)45 6-0/22	22	30	180	2.5	162	-	151	143	139	132	121	109	94
	EVMS(.)45 7-2/30	30	40	200	2.5	181	-	165	157	153	144	131	116	98.5
	EVMS(.)45 7-0/30	30	40	200	2.5	186	-	175	167	162	154	142	127	110
	EVMS(.)45 8-2/30	30	40	200	2.5	209	-	192	183	178	169	154	137	117
	EVMS(.)45 8-0/30	30	40	200	2.5	212	-	200	191	187	177	163	147	127
	EVMS(.)45 9-2/30	30	40	200	2.5	233	-	214	205	200	189	173	153	129
	EVMS(.)45 9-0/37	37	50	200	2.5	243	-	229	218	214	203	188	170	147
	EVMS(.)45 10-2/37	37	50	200	3.5	269	-	246	233	227	213	196	174	147
	EVMS(.)45 10-0/37	37	50	200	3.5	269	-	253	243	236	225	208	188	163
	EVMS(.)45 11-2/45	45	60	225	3.5	298	-	272	258	250	236	217	193	164
	EVMS(.)45 11-0/45	45	60	225	3.5	296	-	279	267	260	248	229	207	179
	EVMS(.)45 12-2/45	45	60	225	3.5	326	-	297	282	275	259	238	213	181
	EVMS(.)45 12-0/45	45	60	225	3.5	323	-	304	292	284	270	250	225	196
	EVMS(.)45 13-2/45	45	60	225	3.5	342	-	320	307	300	286	264	234	203

1.6 MPa=16 bar; 2.5 MPa=25 bar; 3.0 MPa=30 bar; 3.5 MPa=35 bar

EBARA Pumps Europe S.p.A. reserves the right to make changes without prior notice.

SELECTION CHART
EVMS(.)64-90

	Pump Type	Motor kW	Motor HP	Size	Maximum working pressure (MPa)	Q=Capacity l/min 0	500	600	750	1000	1200	1230	1330	1400	1600	1800	2000
						m³/h 0	30	36	45	60	72	74	80	84	96	108	120
	Three phase					H=Total manometric head in metres											
64	EVMS(.)64 1-1/4.0	4.0	5.5	112	1.6	23	20	19.4	18.6	15.5	11.6	10.8	8,0	6.3	-	-	-
	EVMS(.)64 1-0/5.5	5.5	7.5	132	1.6	30	27	26.5	26	22.4	19.4	18.8	16.7	15.4	-	-	-
	EVMS(.)64 2-2/7.5	7.5	10	132	1.6	47	42	40.5	38.3	31.8	24.5	23.2	18.4	14.3	-	-	-
	EVMS(.)64 2-1/11	11	15	160	1.6	53	49	47	45	38	31.4	30.4	26.4	22.4	-	-	-
	EVMS(.)64 2-0/15	15	20	160	1.6	60	55	53.5	52.5	46.5	40.5	39.7	36.5	32.7	-	-	-
	EVMS(.)64 3-2/15	15	20	160	1.6	73	69	67	63.5	54	43.5	42	35.1	29.3	-	-	-
	EVMS(.)64 3-1/15	15	20	160	1.6	79	76	74	71.5	62	52	50.5	45	38.9	-	-	-
	EVMS(.)64 3-0/18.5	18.5	25	160	1.6	88	84.5	83.5	81.5	74	65	63.5	59	54	-	-	-
	EVMS(.)64 4-2/18.5	18.5	25	160	1.6	108	102	99	93.5	82.5	69.5	67.5	60	52.5	-	-	-
	EVMS(.)64 4-1/22	22	30	180	1.6	115	110	107	103	90.5	77	75.5	68.5	61.5	-	-	-
	EVMS(.)64 4-0/22	22	30	180	1.6	120	115	112	109	98	86.5	84.5	76.5	-	-	-	-
	EVMS(.)64 4-0/30	30	40	200	1.6	120	115	112	109	98	86.5	84.5	76.5	72	-	-	-
	EVMS(.)64 5-2/30	30	40	200	1.6	137	129	126	121	106	90	87.5	77.5	69	-	-	-
	EVMS(.)64 5-1/30	30	40	200	1.6	150	137	133	128	113	98	95.5	87	78	-	-	-
	EVMS(.)64 5-0/30	30	40	200	1.6	157	145	142	136	122	108	105	97	90	-	-	-
	EVMS(.)64 6-2/30	30	40	200	2.5	170	160	155	148	129	110	107	95.5	84.5	-	-	-
	EVMS(.)64 6-1/37	37	50	200	2.5	190	173	168	158	141	122	119	109	100	-	-	-
	EVMS(.)64 6-0/37	37	50	200	2.5	197	177	172	165	150	131	128	116	108	-	-	-
	EVMS(.)64 7-2/37	37	50	200	2.5	207	189	185	177	158	136	132	118	108	-	-	-
	EVMS(.)64 7-1/37	37	50	200	2.5	220	197	192	184	165	144	141	-	-	-	-	-
	EVMS(.)64 7-1/45	45	60	225	2.5	220	197	192	184	165	144	141	129	118	-	-	-
	EVMS(.)64 7-0/45	45	60	225	2.5	220	207	202	192	175	153	149	135	127	-	-	-
	EVMS(.)64 8-2/45	45	60	225	2.5	229	220	215	205	184	160	155	140	127	-	-	-
	EVMS(.)64 8-1/45	45	60	225	2.5	240	228	223	213	191	166	162	147	136	-	-	-
90	EVMS(.)90 1-1/5.5	5.5	7.5	132	1.6	26.7	-	-	20.9	19.6	18.2	17.9	16.8	15.9	12.7	9.2	5.4
	EVMS(.)90 1-0/7.5	7.5	10	132	1.6	35.8	-	-	28.1	25.1	22.9	22.6	21.6	20.9	18.4	14.8	11
	EVMS(.)90 2-2/11	11	15	160	1.6	53.5	-	-	42	39.2	36.3	35.7	33.5	31.7	25.5	18.3	10.7
	EVMS(.)90 2-0/15	15	20	160	1.6	69	-	-	56.5	51	47	46.5	44.5	43.5	38.6	32.2	25.4
	EVMS(.)90 3-2/18.5	18.5	25	160	1.6	86.5	-	-	70	65.5	61	60	57	54.5	46	36	25.5
	EVMS(.)90 3-0/22	22	30	180	1.6	103	-	-	88	81.5	76	75	72	70	63.5	54.5	45
	EVMS(.)90 4-2/30	30	40	200	1.6	124	-	-	102	95	88	87	83	79.5	68.5	55.5	41.5
	EVMS(.)90 4-0/30	30	40	200	1.6	138	-	-	117	108	101	100	96.5	93.5	84.5	73	60
	EVMS(.)90 5-2/37	37	50	200	2.5	161	-	-	133	124	116	114	109	105	92.5	76	58.5
	EVMS(.)90 5-0/37	37	50	200	2.5	171	-	-	149	139	130	129	124	121	110	96.5	82
	EVMS(.)90 6-2/45	45	60	225	2.5	193	-	-	163	152	142	141	135	130	115	96.5	77.5
	EVMS(.)90 6-0/45	45	60	225	2.5	205	-	-	179	167	156	155	149	145	132	115	98.5

1.6 MPa=16 bar; 2.5 MPa=25 bar

EBARA Pumps Europe S.p.A. reserves the right to make changes without prior notice.

PERFORMANCE CURVE
EVMS(L)1

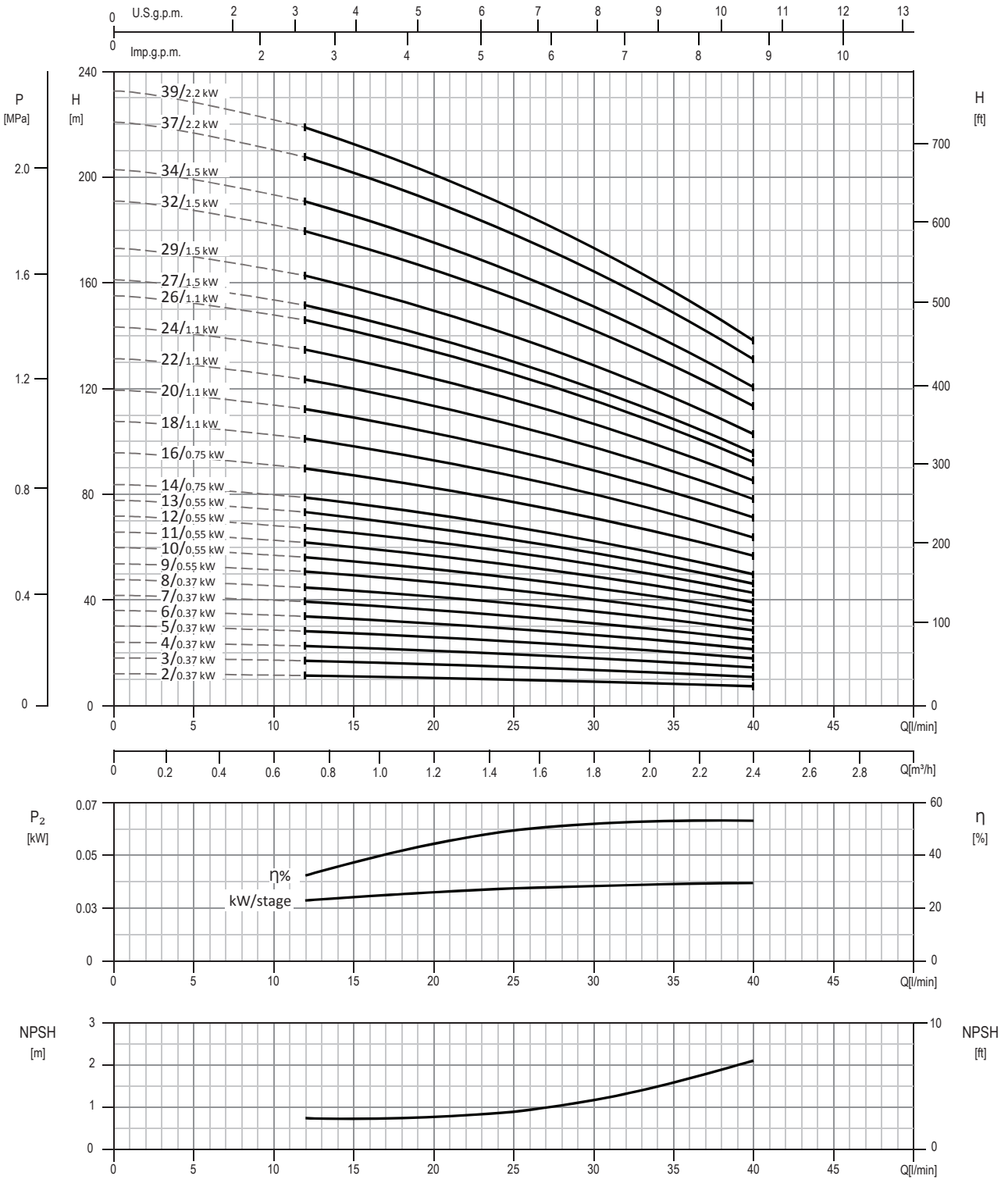

Test standard: ISO 9906:2012 - Grade 3B

EBARA Pumps Europe S.p.A. reserves the right to make changes without prior notice.

TECHNICAL DATA
EVMS(L)1

Dimensional sketch

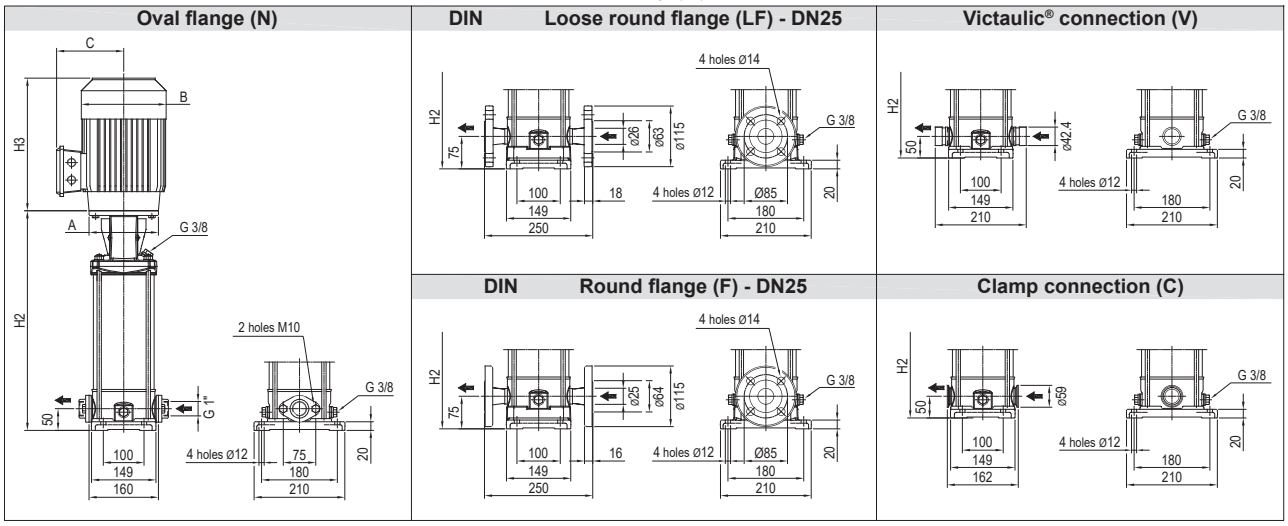

Dimensions [mm] and Weights [Kg]

Pump Type	Pmax [MPa]	Motor kW	Size	A Ø	1~ B	1~ C	3~ B	3~ C	Oval flange (N) H2	Oval flange (N) H2+H3 1 ~	Oval flange (N) H2+H3 3 ~	Oval flange (N) Weight Pump	Oval flange (N) Weight Pump + Motor 1 ~	Oval flange (N) Weight Pump + Motor 3 ~	Loose round flange (LF) Round flange (F) H2	Loose round flange (LF) Round flange (F) H2+H3 1 ~	Loose round flange (LF) Round flange (F) H2+H3 3 ~	Loose round flange (LF) Round flange (F) Weight Pump	Loose round flange (LF) Round flange (F) Weight Pump + Motor 1 ~	Loose round flange (LF) Round flange (F) Weight Pump + Motor 3 ~	Victaulic® connection (V) Clamp connection (C) H2	Victaulic® connection (V) Clamp connection (C) H2+H3 1 ~	Victaulic® connection (V) Clamp connection (C) H2+H3 3 ~	Victaulic® connection (V) Clamp connection (C) Weight Pump	Victaulic® connection (V) Clamp connection (C) Weight Pump + Motor 1 ~	Victaulic® connection (V) Clamp connection (C) Weight Pump + Motor 3 ~
EVMS(L)1 2/0.37	1.6	0.37	71	105	141	119	141	119	250	452	452	9.7	16.2	16.2	275	477	477	10.4	16.9	16.9	250	452	452	9.7	16.2	16.2
EVMS(L)1 3/0.37	1.6	0.37	71	105	141	119	141	119	271	473	473	10.2	16.7	16.7	296	498	498	10.9	17.4	17.4	271	473	473	10.2	16.7	16.7
EVMS(L)1 4/0.37	1.6	0.37	71	105	141	119	141	119	292	494	494	10.6	17.1	17.1	317	519	519	11.3	17.8	17.8	292	494	494	10.6	17.1	17.1
EVMS(L)1 5/0.37	1.6	0.37	71	105	141	119	141	119	313	515	515	11.1	17.6	17.6	338	540	540	11.8	18.3	18.3	313	515	515	11.1	17.6	17.6
EVMS(L)1 6/0.37	1.6	0.37	71	105	141	119	141	119	334	536	536	11.5	18.0	18.0	359	561	561	12.2	18.7	18.7	334	536	536	11.5	18.0	18.0
EVMS(L)1 7/0.37	1.6	0.37	71	105	141	119	141	119	355	557	557	11.9	18.4	18.4	380	582	582	12.6	19.1	19.1	355	557	557	11.9	18.4	18.4
EVMS(L)1 8/0.37	1.6	0.37	71	105	141	119	141	119	376	578	578	12.4	18.9	18.9	401	603	603	13.1	19.6	19.6	376	578	578	12.4	18.9	18.9
EVMS(L)1 9/0.55	1.6	0.55	71	105	141	119	141	119	397	599	599	12.8	19.8	19.8	422	624	624	13.5	20.5	20.5	397	599	599	12.8	19.8	19.8
EVMS(L)1 10/0.55	1.6	0.55	71	105	141	119	141	119	418	620	620	13.2	20.2	20.2	443	645	645	13.9	20.9	20.9	418	620	620	13.2	20.2	20.2
EVMS(L)1 11/0.55	1.6	0.55	71	105	141	119	141	119	439	641	641	13.7	20.7	20.7	464	666	666	14.4	21.4	21.4	439	641	641	13.7	20.7	20.7
EVMS(L)1 12/0.55	1.6	0.55	71	105	141	119	141	119	460	662	662	14.4	21.4	21.4	485	687	687	15.1	22.1	22.1	460	662	662	14.4	21.4	21.4
EVMS(L)1 13/0.55	1.6	0.55	71	105	141	119	141	119	481	683	683	15	22.0	22.0	506	708	708	15.7	22.7	22.7	481	683	683	15	22.0	22.0
EVMS(L)1 14/0.75	1.6	0.75	80	120	160	142	141	102	512	741	745	15.7	25.7	24.2	537	766	770	16.4	26.4	24.9	512	741	745	15.7	25.7	24.2
EVMS(L)1 16/0.75	1.6	0.75	80	120	160	142	141	102	554	783	787	16.7	26.7	25.2	579	808	812	17.4	27.4	25.9	554	783	787	16.7	26.7	25.2
EVMS(L)1 18/1.1	1.6	1.1	80	120	160	142	141	102	596	825	840	17.8	28.8	27.8	621	850	865	18.5	29.5	28.5	596	825	840	17.8	28.8	27.8
EVMS(L)1 20/1.1	1.6	1.1	80	120	160	142	141	102	638	867	882	18.8	29.8	28.8	663	892	907	19.5	30.5	29.5	638	867	882	18.8	29.8	28.8
EVMS(L)1 22/1.1	1.6	1.1	80	120	160	142	141	102	680	909	924	20	31.0	30.0	705	934	949	20.7	31.7	30.7	680	909	924	20	31.0	30.0
EVMS(L)1 24/1.1	1.6	1.1	80	120	160	142	141	102	722	951	966	21	32.0	31.0	747	976	991	21.7	32.7	31.7	722	951	966	21	32.0	31.0
EVMS(L)1 26/1.1	1.6	1.1	80	120	160	142	141	102	764	993	1008	22	33.0	32.0	789	1018	1033	22.7	33.7	32.7	764	993	1008	22	33.0	32.0
EVMS(L)1 27/1.5	2.5	1.5	90	140	172	140	160	119	-	-	-	-	-	-	820	1098	1111	23.1	40.9	36.6	795	1073	1086	22.4	40.2	35.9
EVMS(L)1 29/1.5	2.5	1.5	90	140	172	140	160	119	-	-	-	-	-	-	862	1140	1153	24.1	41.9	37.6	837	1115	1128	23.4	41.2	36.9
EVMS(L)1 32/1.5	2.5	1.5	90	140	172	140	160	119	-	-	-	-	-	-	925	1203	1216	25.4	43.2	38.9	900	1178	1191	24.7	42.5	38.2
EVMS(L)1 34/1.5	2.5	1.5	90	140	172	140	160	119	-	-	-	-	-	-	967	1245	1258	26.3	44.1	39.8	942	1220	1233	25.6	43.4	39.1
EVMS(L)1 37/2.2	2.5	2.2	90	140	172	140	160	119	-	-	-	-	-	-	1030	1308	1321	27.7	47.2	42.7	1005	1283	1296	27	46.5	42.0
EVMS(L)1 39/2.2	2.5	2.2	90	140	172	140	160	119	-	-	-	-	-	-	1072	1350	1363	28.7	48.2	43.7	1047	1325	1338	28	47.5	43.0

1.6 MPa=16 bar; 2.5 MPa=25 bar

- not available model

EBARA Pumps Europe S.p.A. reserves the right to make changes without prior notice.

SECTIONAL VIEW
EVMS(L)1

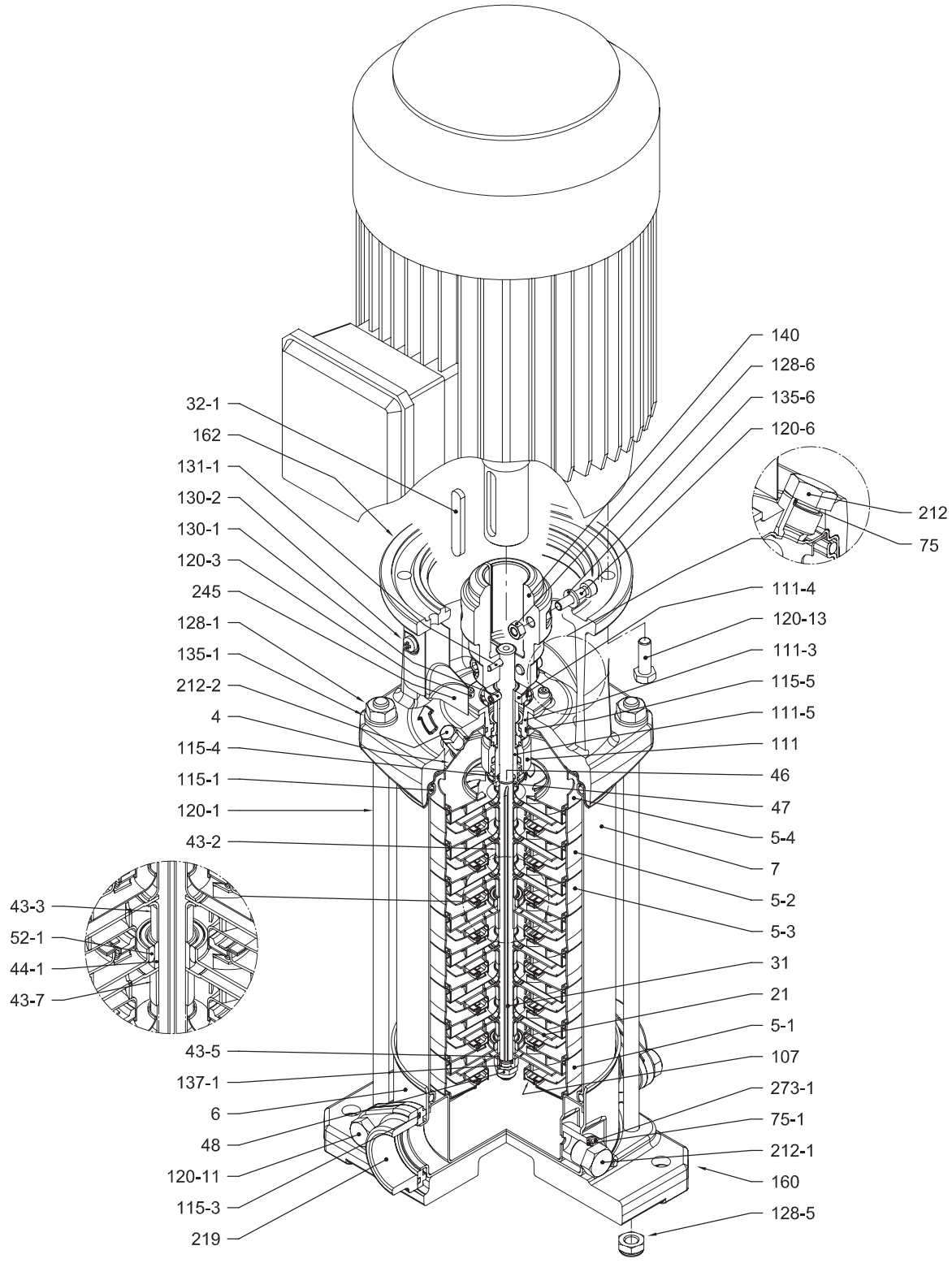

with Oval flange (N)

EBARA Pumps Europe S.p.A. reserves the right to make changes without prior notice.

PIPE CONNECTION
EVMS(L)1

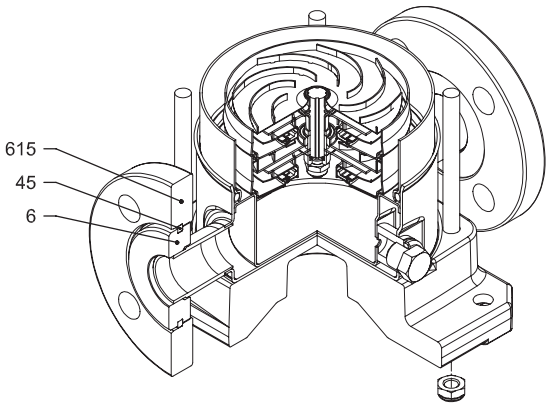

with Loose round flange (LF)

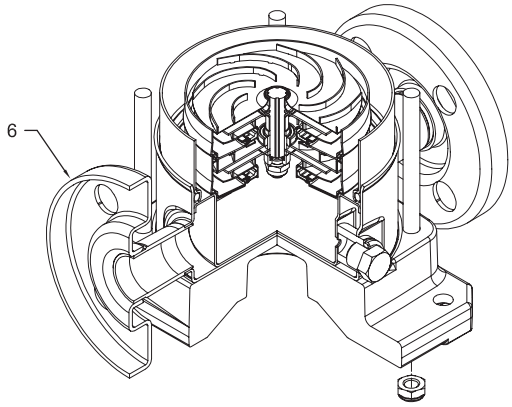

with Round flange (F)

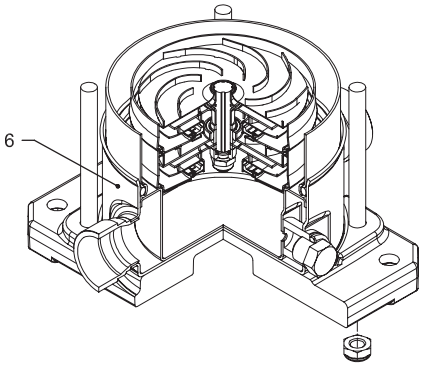

with Victaulic® connection (V)

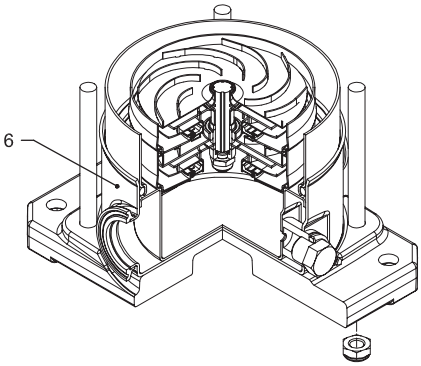

with Clamp connection (C)

EBARA Pumps Europe S.p.A. reserves the right to make changes without prior notice.

SECTIONAL TABLE
EVMS(L)1

N°	PART NAME		MATERIAL		DIMENSIONS	STANDARD
			EVMS	EVMSL		
4	Casing cover		EN 1.4301 (AISI 304)	EN 1.4404 (AISI 316L)		
5-1	Suction casing		EN 1.4301 (AISI 304)	EN 1.4404 (AISI 316L)		
5-2	Intermediate casing		EN 1.4301 (AISI 304)	EN 1.4404 (AISI 316L)		
5-3	Intermediate casing with bearing		EN 1.4301 (AISI 304)	EN 1.4404 (AISI 316L)		
5-4	Discharge casing		EN 1.4301 (AISI 304)	EN 1.4404 (AISI 316L)		
6	Bottom casing		EN 1.4301 (AISI 304)	EN 1.4404 (AISI 316L)		
7	Outer casing		EN 1.4301 (AISI 304)	EN 1.4404 (AISI 316L)		
21	Impeller		EN 1.4301 (AISI 304)	EN 1.4404 (AISI 316L)		
31	Shaft		EN 1.4301 (AISI 304)	EN 1.4404 (AISI 316L)		
32-1	Adjuster key		EN 1.4301 (AISI 304)			
43-2	Shaft sleeve (intermediate)		EN 1.4301 (AISI 304)	EN 1.4404 (AISI 316L)		
43-3	Shaft sleeve (bearing)		EN 1.4301 (AISI 304)	EN 1.4404 (AISI 316L)		
43-5	Shaft sleeve (last stage)		EN 1.4301 (AISI 304)	EN 1.4404 (AISI 316L)		
43-7	Spacer		EN 1.4301 (AISI 304)	EN 1.4404 (AISI 316L)		
44-1	Shaft sleeve bearing		Tungsten carbide			
45	Flange holder		EN 1.4301 (AISI 304)			
46	Ring (mechanical seal)		EN 1.4404 (AISI 316L)			
47	Ring holder		EN 1.4301 (AISI 304)	EN 1.4404 (AISI 316L)		
48	Impeller nut		EN 1.4301 (AISI 304) with inox insert	EN 1.4401 (AISI 316) with inox insert	M8	
52-1	Sleeve bearing		Tungsten carbide			
75	O-Ring (priming plug)		EPDM / FPM		Ø12.37x2.62	OR 3050
75-1	O-Ring (drainage plug)		EPDM / FPM			
107	Liner ring		EN 1.4301 (AISI 304) + PPS	EN 1.4404 (AISI 316L) + PPS		
111	Mechanical seal		see pages 6-7			
111-3	Mechanical seal seat		EN 1.4308 (ASTM CF8)	EN 1.4408 (ASTM CF8M)		
111-4	Seal holder		EN 1.4301 (AISI 304)			
111-5	Mechanical seal cartridge sleeve		EN 1.4301 (AISI 304)	EN 1.4404 (AISI 316L)		
115-1	O-Ring (outer casing)		EPDM / FPM		Ø129.54x5.34	OR 6945
115-3	O-Ring		EPDM / FPM			
115-4	O-Ring (cartridge sleeve)		EPDM / FPM		Ø11.91x2.62	OR 4093
115-5	O-Ring (seal flange)		EPDM / FPM		Ø32.99x2.62	OR 4175
120-1	Tie-rod		EN 1.4057 (AISI 431)		M10	
120-3	Screw (seal flange)		A2-70		M4x10	ISO 4762
120-6	Screw (pump coupling)		Galvanized steel		M6x25	ISO 4762
120-11	Screw (counterflange)		A2-70			
120-13	Screw for motor	MEC 71-80	Galvanized steel 8.8 strength class ISO 898/1		M6x20	ISO 4017
		MEC 90			M8x20	ISO 4017
128-1	Nut (tie rod)		A2-70		M10	ISO 4032
128-5	Nut (tie rod)		A2-70		M10	UNI 7474
128-6	Nut (aluminium coupling)	MEC 71-80-90-100-112	Galvanized steel		M6	ISO 4032
130-1	Set screw		EN 1.4301 (AISI 304)		M5x8	ISO 4026
130-2	Screw for coupling guard		A2-70		M5x6	UNI 7687
131-1	Pin for shaft		Carbon Steel		Ø4x32	ISO 2338
135-1	Washer (tie rod)		EN 1.4301 (AISI 304)		Ø10.5x21x2	ISO 7089
135-6	Washer (aluminium coupling)	up to 4.0 kW	Carbon Steel		Ø6	
137-1	Impeller spacer		EN 1.4301 (AISI 304)	EN 1.4404 (AISI 316L)		
140	Coupling	up to 4.0 kW	Die cast Aluminium EN AB-AISI11Cu2 (Fe)			
160	Base		Die cast Aluminium EN AB-AISI11Cu2 (Fe)			
162	Motor bracket		Cast iron EN-GJL-250			
212	Priming plug		EN 1.4301 (AISI 304)	EN 1.4404 (AISI 316L)	G 3/8	
212-1	Drainage plug		EN 1.4301 (AISI 304)	EN 1.4404 (AISI 316L)	G 3/8	
212-2	Venting plug		EN 1.4404 (AISI 316L)			
219	Counter flange	flange type: N	EN 1.4308 (ASTM CF8)	EN 1.4408 (ASTM CF8M)		
		flange type: LF-F-V-C	EN 1.4301 (AISI 304)	EN 1.4404 (AISI 316L)		
245	Coupling guard		EN 1.4301 (AISI 304)			
273-1	Washer (drainage plug)		EN 1.4301 (AISI 304)	EN 1.4404 (AISI 316L)		
615	Flange		Nodular Cast Iron			

EBARA Pumps Europe S.p.A. reserves the right to make changes without prior notice.

QUANTITY FOR MODEL EVMS(L)1

Pump Type	N°																													
	4	5-1	5-2	5-3	5-4	6	7	21	31	32-1	43-2	43-3	43-5	43-7	44-1	45**	46	47	48	52-1	75	75-1	107	111	111-3	111-4	111-5	115-1	115-3*	115-4	115-5
EVMS(L)1 2/0.37	1	1	/	1	1	1	1	2	1	1	1	1	/	/	1	4	2	1	1	1	1	2	2	1	1	1	1	2	2	1	1
EVMS(L)1 3/0.37	1	1	1	1	1	1	1	3	1	1	3	1	/	/	1	4	2	1	1	1	1	2	3	1	1	1	1	2	2	1	1
EVMS(L)1 4/0.37	1	1	2	1	1	1	1	4	1	1	5	1	/	/	1	4	2	1	1	1	1	2	4	1	1	1	1	2	2	1	1
EVMS(L)1 5/0.37	1	1	3	1	1	1	1	5	1	1	7	1	1	/	1	4	2	1	1	1	1	2	5	1	1	1	1	2	2	1	1
EVMS(L)1 6/0.37	1	1	4	1	1	1	1	6	1	1	9	1	/	/	1	4	2	1	1	1	1	2	6	1	1	1	1	2	2	1	1
EVMS(L)1 7/0.37	1	1	5	1	1	1	1	7	1	1	11	1	/	/	1	4	2	1	1	1	1	2	7	1	1	1	1	2	2	1	1
EVMS(L)1 8/0.37	1	1	6	1	1	1	1	8	1	1	13	1	/	/	1	4	2	1	1	1	1	2	8	1	1	1	1	2	2	1	1
EVMS(L)1 9/0.55	1	1	7	1	1	1	1	9	1	1	15	1	1	/	1	4	2	1	1	1	1	2	9	1	1	1	1	2	2	1	1
EVMS(L)1 10/0.55	1	1	8	1	1	1	1	10	1	1	17	1	/	/	1	4	2	1	1	1	1	2	10	1	1	1	1	2	2	1	1
EVMS(L)1 11/0.55	1	1	9	1	1	1	1	11	1	1	19	1	/	/	1	4	2	1	1	1	1	2	11	1	1	1	1	2	2	1	1
EVMS(L)1 12/0.55	1	1	10	1	1	1	1	12	1	1	21	1	/	/	1	4	2	1	1	1	1	2	12	1	1	1	1	2	2	1	1
EVMS(L)1 13/0.55	1	1	10	2	1	1	1	13	1	1	20	2	1	1	2	4	2	1	1	2	1	2	13	1	1	1	1	2	2	1	1
EVMS(L)1 14/0.75	1	1	11	2	1	1	1	14	1	1	22	2	/	1	2	4	2	1	1	2	1	2	14	1	1	1	1	2	2	1	1
EVMS(L)1 16/0.75	1	1	13	2	1	1	1	16	1	1	26	2	/	1	2	4	2	1	1	2	1	2	16	1	1	1	1	2	2	1	1
EVMS(L)1 18/1.1	1	1	15	2	1	1	1	18	1	1	30	2	/	1	2	4	2	1	1	2	1	2	18	1	1	1	1	2	2	1	1
EVMS(L)1 20/1.1	1	1	17	2	1	1	1	20	1	1	34	2	/	1	2	4	2	1	1	2	1	2	20	1	1	1	1	2	2	1	1
EVMS(L)1 22/1.1	1	1	19	2	1	1	1	22	1	1	38	2	/	1	2	4	2	1	1	2	1	2	22	1	1	1	1	2	2	1	1
EVMS(L)1 24/1.1	1	1	21	2	1	1	1	24	1	1	42	2	/	1	2	4	2	1	1	2	1	2	24	1	1	1	1	2	2	1	1
EVMS(L)1 26/1.1	1	1	23	2	1	1	1	26	1	1	46	2	/	1	2	4	2	1	1	2	1	2	26	1	1	1	1	2	2	1	1
EVMS(L)1 27/1.5	1	1	24	2	1	1	1	27	1	1	48	2	/	1	2	4	2	1	1	2	1	2	27	1	1	1	1	2	/	1	1
EVMS(L)1 29/1.5	1	1	26	2	1	1	1	29	1	1	52	2	/	1	2	4	2	1	1	2	1	2	29	1	1	1	1	2	/	1	1
EVMS(L)1 32/1.5	1	1	29	2	1	1	1	32	1	1	58	2	/	1	2	4	2	1	1	2	1	2	32	1	1	1	1	2	/	1	1
EVMS(L)1 34/1.5	1	1	31	2	1	1	1	34	1	1	62	2	/	1	2	4	2	1	1	2	1	2	34	1	1	1	1	2	/	1	1
EVMS(L)1 37/2.2	1	1	34	2	1	1	1	37	1	1	68	2	/	1	2	4	2	1	1	2	1	2	37	1	1	1	1	2	/	1	1
EVMS(L)1 39/2.2	1	1	36	2	1	1	1	39	1	1	72	2	/	1	2	4	2	1	1	2	1	2	39	1	1	1	1	2	/	1	1

Pump Type	N°																								
	120-1	120-3	120-6	120-11*	120-13	128-1	128-5	128-6	130-1	130-2	131-1	135-1	135-6	137-1	140	160	162	212	212-1	212-2	219*	245	273-1	615**
EVMS(L)1 2/0.37	4	4	4	4	4	4	4	4	3	4	1	4	4	1	2	1	1	1	2	1	2	2	2	2
EVMS(L)1 3/0.37	4	4	4	4	4	4	4	4	3	4	1	4	4	1	2	1	1	1	2	1	2	2	2	2
EVMS(L)1 4/0.37	4	4	4	4	4	4	4	4	3	4	1	4	4	1	2	1	1	1	2	1	2	2	2	2
EVMS(L)1 5/0.37	4	4	4	4	4	4	4	4	3	4	1	4	4	1	2	1	1	1	2	1	2	2	2	2
EVMS(L)1 6/0.37	4	4	4	4	4	4	4	4	3	4	1	4	4	1	2	1	1	1	2	1	2	2	2	2
EVMS(L)1 7/0.37	4	4	4	4	4	4	4	4	3	4	1	4	4	1	2	1	1	1	2	1	2	2	2	2
EVMS(L)1 8/0.37	4	4	4	4	4	4	4	4	3	4	1	4	4	1	2	1	1	1	2	1	2	2	2	2
EVMS(L)1 9/0.55	4	4	4	4	4	4	4	4	3	4	1	4	4	1	2	1	1	1	2	1	2	2	2	2
EVMS(L)1 10/0.55	4	4	4	4	4	4	4	4	3	4	1	4	4	1	2	1	1	1	2	1	2	2	2	2
EVMS(L)1 11/0.55	4	4	4	4	4	4	4	4	3	4	1	4	4	1	2	1	1	1	2	1	2	2	2	2
EVMS(L)1 12/0.55	4	4	4	4	4	4	4	4	3	4	1	4	4	1	2	1	1	1	2	1	2	2	2	2
EVMS(L)1 13/0.55	4	4	4	4	4	4	4	4	3	4	1	4	4	1	2	1	1	1	2	1	2	2	2	2
EVMS(L)1 14/0.75	4	4	4	4	4	4	4	4	3	4	1	4	4	1	2	1	1	1	2	1	2	2	2	2
EVMS(L)1 16/0.75	4	4	4	4	4	4	4	4	3	4	1	4	4	1	2	1	1	1	2	1	2	2	2	2
EVMS(L)1 18/1.1	4	4	4	4	4	4	4	4	3	4	1	4	4	1	2	1	1	1	2	1	2	2	2	2
EVMS(L)1 20/1.1	4	4	4	4	4	4	4	4	3	4	1	4	4	1	2	1	1	1	2	1	2	2	2	2
EVMS(L)1 22/1.1	4	4	4	4	4	4	4	4	3	4	1	4	4	1	2	1	1	1	2	1	2	2	2	2
EVMS(L)1 24/1.1	4	4	4	4	4	4	4	4	3	4	1	4	4	1	2	1	1	1	2	1	2	2	2	2
EVMS(L)1 26/1.1	4	4	4	4	4	4	4	4	3	4	1	4	4	1	2	1	1	1	2	1	2	2	2	2
EVMS(L)1 27/1.5	4	4	4	/	4	4	4	4	3	4	1	4	4	1	2	1	1	1	2	1	/	2	2	2
EVMS(L)1 29/1.5	4	4	4	/	4	4	4	4	3	4	1	4	4	1	2	1	1	1	2	1	/	2	2	2
EVMS(L)1 32/1.5	4	4	4	/	4	4	4	4	3	4	1	4	4	1	2	1	1	1	2	1	/	2	2	2
EVMS(L)1 34/1.5	4	4	4	/	4	4	4	4	3	4	1	4	4	1	2	1	1	1	2	1	/	2	2	2
EVMS(L)1 37/2.2	4	4	4	/	4	4	4	4	3	4	1	4	4	1	2	1	1	1	2	1	/	2	2	2
EVMS(L)1 39/2.2	4	4	4	/	4	4	4	4	3	4	1	4	4	1	2	1	1	1	2	1	/	2	2	2

* only for Oval flange (N)
** only for Loose round flange (LF)

EBARA

EBARA Pumps Europe

EBARA Pumps Europe S.p.A. reserves the right to make changes without prior notice.

PERFORMANCE CURVE
EVMSG1

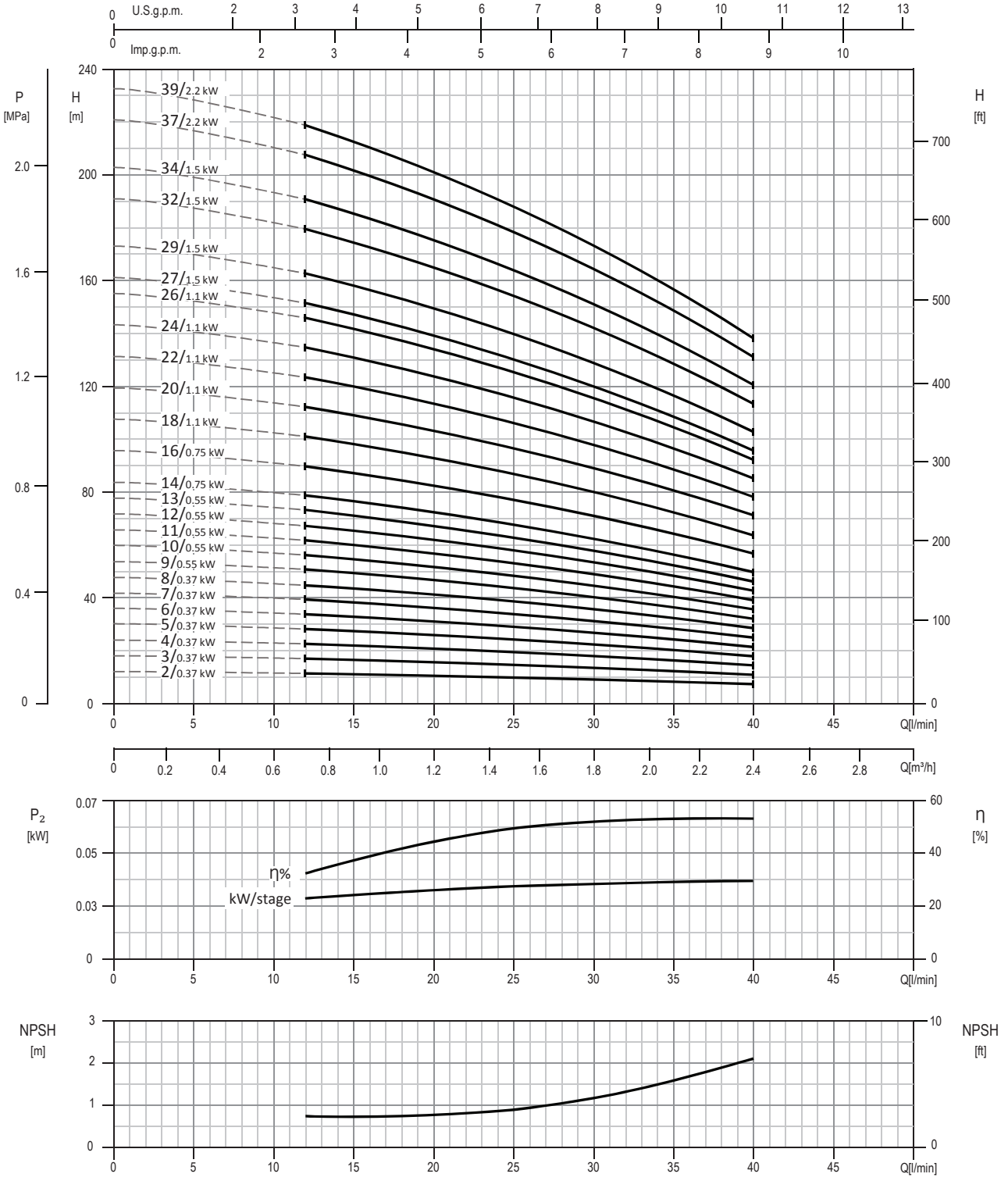

Test standard: ISO 9906:2012 - Grade 3B

EBARA Pumps Europe S.p.A. reserves the right to make changes without prior notice.

TECHNICAL DATA
EVMSG1

Dimensional sketch

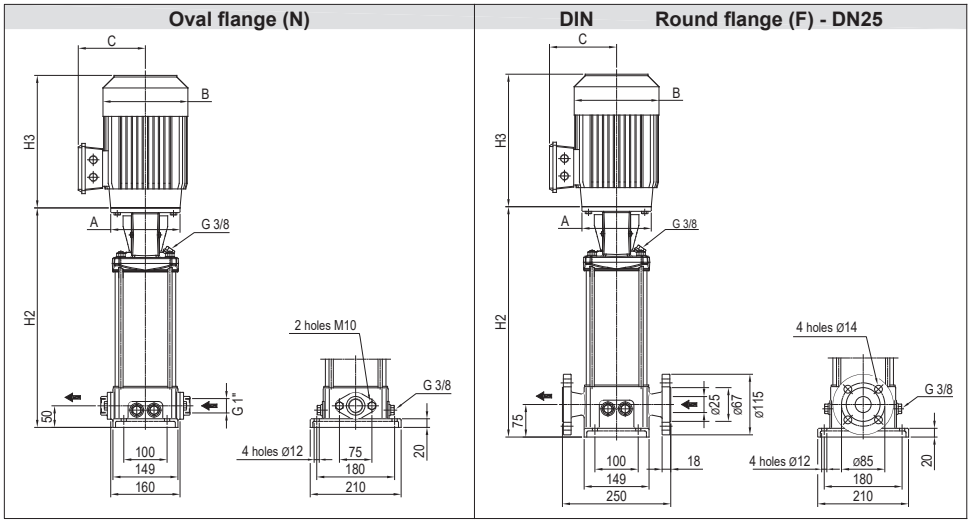

Dimensions [mm] and Weights [Kg]

Pump Type	Pmax [MPa]	Motor kW	Size	A Ø	1~ B	1~ C	3~ B	3~ C	Oval flange (N) H2	H2+H3 1~	H2+H3 3~	Weight Pump	Weight Pump + Motor 1~	Weight Pump + Motor 3~	Round flange (F) H2	H2+H3 1~	H2+H3 3~	Weight Pump	Weight Pump + Motor 1~	Weight Pump + Motor 3~
EVMSG1 2/0.37	1.6	0.37	71	105	141	119	141	119	250	452	452	14	20.5	20.5	275	477	477	17.4	23.9	23.9
EVMSG1 3/0.37	1.6	0.37	71	105	141	119	141	119	271	473	473	14.5	21.0	21.0	296	498	498	17.9	24.4	24.4
EVMSG1 4/0.37	1.6	0.37	71	105	141	119	141	119	292	494	494	14.9	21.4	21.4	317	519	519	18.3	24.8	24.8
EVMSG1 5/0.37	1.6	0.37	71	105	141	119	141	119	313	515	515	15.4	21.9	21.9	338	540	540	18.8	25.3	25.3
EVMSG1 6/0.37	1.6	0.37	71	105	141	119	141	119	334	536	536	15.8	22.3	22.3	359	561	561	19.2	25.7	25.7
EVMSG1 7/0.37	1.6	0.37	71	105	141	119	141	119	355	557	557	16.2	22.7	22.7	380	582	582	19.6	26.1	26.1
EVMSG1 8/0.37	1.6	0.37	71	105	141	119	141	119	376	578	578	16.7	23.2	23.2	401	603	603	20.1	26.6	26.6
EVMSG1 9/0.55	1.6	0.55	71	105	141	119	141	119	397	599	599	17.1	24.1	24.1	422	624	624	20.5	27.5	27.5
EVMSG1 10/0.55	1.6	0.55	71	105	141	119	141	119	418	620	620	17.5	24.5	24.5	443	645	645	20.9	27.9	27.9
EVMSG1 11/0.55	1.6	0.55	71	105	141	119	141	119	439	641	641	18	25.0	25.0	464	666	666	21.4	28.4	28.4
EVMSG1 12/0.55	1.6	0.55	71	105	141	119	141	119	460	662	662	18.7	25.7	25.7	485	687	687	22.1	29.1	29.1
EVMSG1 13/0.55	1.6	0.55	71	105	141	119	141	119	481	683	683	19.3	26.3	26.3	506	708	708	22.7	29.7	29.7
EVMSG1 14/0.75	1.6	0.75	80	120	160	142	141	102	512	741	745	20	30.0	28.5	537	766	770	23.4	33.4	31.9
EVMSG1 16/0.75	1.6	0.75	80	120	160	142	141	102	554	783	787	21	31.0	29.5	579	808	812	24.4	34.4	32.9
EVMSG1 18/1.1	1.6	1.1	80	120	160	142	141	102	596	825	840	22.1	33.1	32.1	621	850	865	25.5	36.5	35.5
EVMSG1 20/1.1	1.6	1.1	80	120	160	142	141	102	638	867	882	23.1	34.1	33.1	663	892	907	26.5	37.5	36.5
EVMSG1 22/1.1	1.6	1.1	80	120	160	142	141	102	680	909	924	24.3	35.3	34.3	705	934	949	27.7	38.7	37.7
EVMSG1 24/1.1	1.6	1.1	80	120	160	142	141	102	722	951	966	25.3	36.3	35.3	747	976	991	28.7	39.7	38.7
EVMSG1 26/1.1	1.6	1.1	80	120	160	142	141	102	764	993	1008	26.3	37.3	36.3	789	1018	1033	29.7	40.7	39.7
EVMSG1 27/1.5	2.5	1.5	90	140	172	140	160	119	-	-	-	-	-	-	820	1098	1111	30.1	47.9	43.6
EVMSG1 29/1.5	2.5	1.5	90	140	172	140	160	119	-	-	-	-	-	-	862	1140	1153	31.1	48.9	44.6
EVMSG1 32/1.5	2.5	1.5	90	140	172	140	160	119	-	-	-	-	-	-	925	1203	1216	32.4	50.2	45.9
EVMSG1 34/1.5	2.5	1.5	90	140	172	140	160	119	-	-	-	-	-	-	967	1245	1258	33.3	51.1	46.8
EVMSG1 37/2.2	2.5	2.2	90	140	172	140	160	119	-	-	-	-	-	-	1030	1308	1321	34.7	54.2	49.7
EVMSG1 39/2.2	2.5	2.2	90	140	172	140	160	119	-	-	-	-	-	-	1072	1350	1363	35.7	55.2	50.7

1.6 MPa=16 bar; 2.5 MPa=25 bar
- not available model

EBARA
EBARA Pumps Europe
EBARA Pumps Europe S.p.A. reserves the right to make changes without prior notice.

SECTIONAL VIEW
EVMSG1

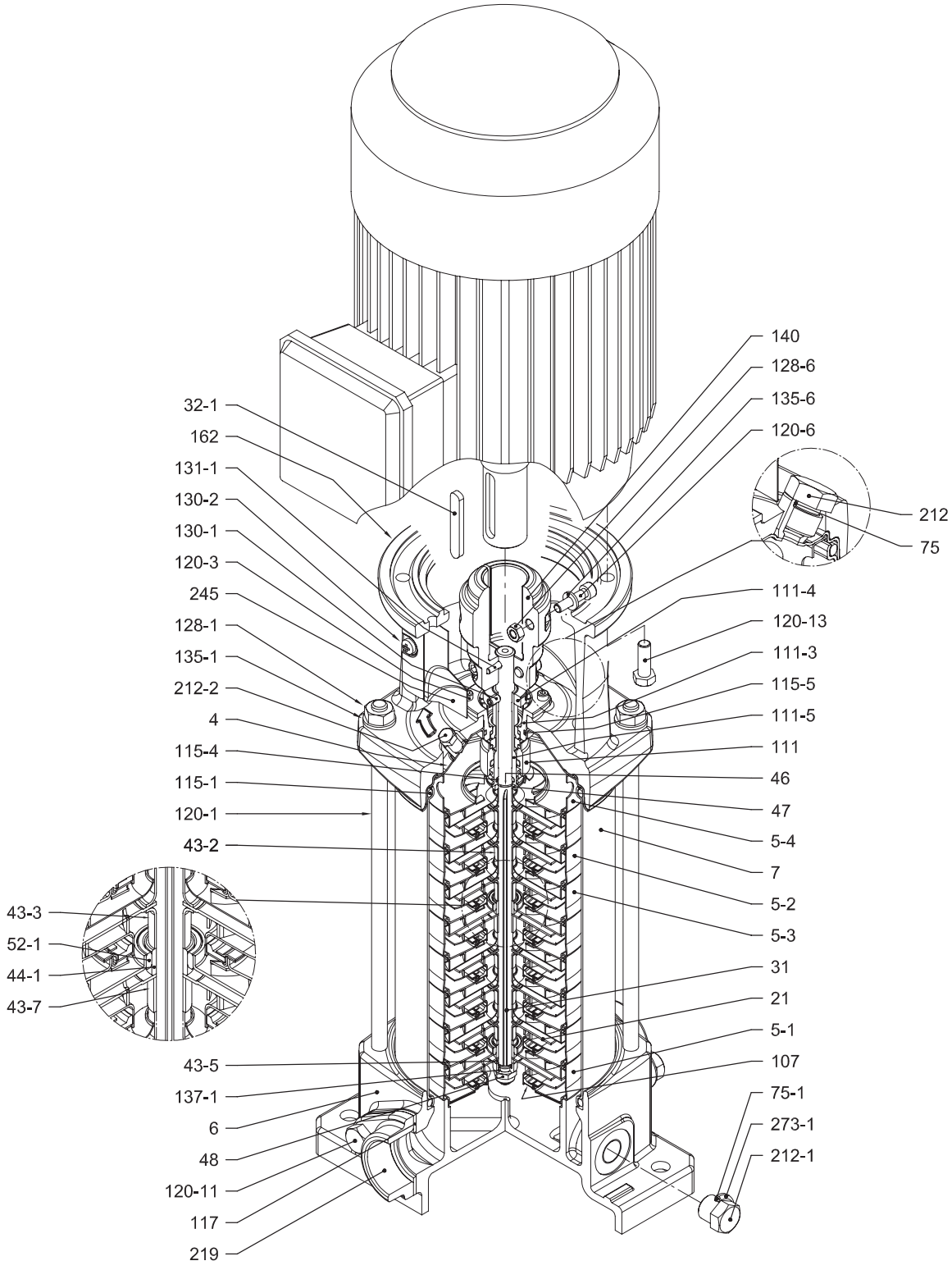

with Oval flange (N)

EBARA Pumps Europe S.p.A. reserves the right to make changes without prior notice.

PIPE CONNECTION
EVMSG1

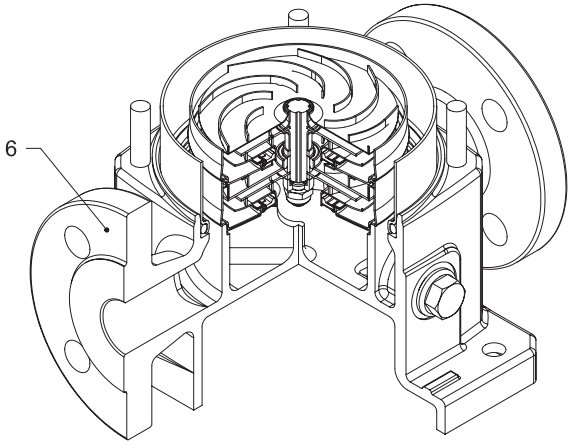

with Round flange (F)

EBARA
EBARA Pumps Europe
EBARA Pumps Europe S.p.A. reserves the right to make changes without prior notice.

SECTIONAL TABLE
EVMSG1

N°	PART NAME		MATERIAL EVMSG	DIMENSIONS	STANDARD
4	Casing cover		EN 1.4301 (AISI 304)		
5-1	Suction casing		EN 1.4301 (AISI 304)		
5-2	Intermediate casing		EN 1.4301 (AISI 304)		
5-3	Intermediate casing with bearing		EN 1.4301 (AISI 304)		
5-4	Discharge casing		EN 1.4301 (AISI 304)		
6	Bottom casing		Cast Iron EN-GJL-250		
7	Outer casing		EN 1.4301 (AISI 304)		
21	Impeller		EN 1.4301 (AISI 304)		
31	Shaft		EN 1.4301 (AISI 304)		
32-1	Adjuster key		EN 1.4301 (AISI 304)		
43-2	Shaft sleeve (intermediate)		EN 1.4301 (AISI 304)		
43-3	Shaft sleeve (bearing)		EN 1.4301 (AISI 304)		
43-5	Shaft sleeve (last stage)		EN 1.4301 (AISI 304)		
43-7	Spacer		EN 1.4301 (AISI 304)		
44-1	Shaft sleeve bearing		Tungsten carbide		
46	Ring (mechanical seal)		EN 1.4404 (AISI 316L)		
47	Ring holder		EN 1.4404 (AISI 316L)		
48	Impeller nut		EN 1.4301 (AISI 304) with inox insert	M8	
52-1	Sleeve bearing		Tungsten carbide		
75	O-Ring (priming plug)		EPDM / FPM	Ø12.37x2.62	OR 3050
75-1	O-Ring (drainage plug)		EPDM / FPM		
107	Liner ring		EN 1.4301 (AISI 304) + PPS		
111	Mechanical seal		see pages 6-7		
111-3	Mechanical seal seat		EN 1.4308 (ASTM CF8)		
111-4	Seal holder		EN 1.4301 (AISI 304)		
111-5	Mechanical seal cartridge sleeve		EN 1.4301 (AISI 304)		
115-1	O-Ring (outer casing)		EPDM / FPM	Ø129.54x5.34	OR 6945
115-4	O-Ring (cartridge sleeve)		EPDM / FPM	Ø11.91x2.62	OR 4093
115-5	O-Ring (seal flange)		EPDM / FPM	Ø32.99x2.62	OR 4175
117	Flange gasket		EPDM / FPM		
120-1	Tie-rod		EN 1.4057 (AISI 431)	M10	
120-3	Screw (seal flange)		A2-70	M4x10	ISO 4762
120-6	Screw (pump coupling)		Galvanized steel	M6x25	ISO 4762
120-11	Screw (counterflange)		A2-70		UNI 7323
120-13	Screw for motor	MEC 71-80	Galvanized steel 8.8 strength class ISO 898/1	M6x20	ISO 4017
		MEC 90		M8x20	ISO 4017
128-1	Nut (tie rod)		A2-70	M10	ISO 4032
128-6	Nut (aluminium coupling)	MEC 71-80-90-100-112	Galvanized steel	M6	ISO 4032
130-1	Set screw		A2-70	M5x8	ISO 4026
130-2	Screw for coupling guard		A2-70	M5x6	UNI 7687
131-1	Pin for shaft		Carbon Steel	Ø4x32	ISO 2338
135-1	Washer (tie rod)		EN 1.4301 (AISI 304)	Ø10.5x21x2	ISO 7089
135-6	Washer (aluminium coupling)	up to 4.0 kW	Carbon Steel	Ø6	
137-1	Impeller spacer		EN 1.4301 (AISI 304)		
140	Coupling	up to 4.0 kW	Die cast Aluminium EN AB-AISI11Cu2 (Fe)		
162	Motor bracket		Cast iron EN-GJL-250		
212	Priming plug		EN 1.4301 (AISI 304)	G 3/8	
212-1	Drainage plug		EN 1.4301 (AISI 304)	G 3/8	
212-2	Venting plug		EN 1.4404 (AISI 316L)		
219	Counter flange	flange type: N	Galvanized steel		
		flange type: F	Cast Iron EN-GJL-250		
245	Coupling guard		EN 1.4301 (AISI 304)		
273-1	Washer (drainage plug)		EN 1.4301 (AISI 304)		

EBARA Pumps Europe S.p.A. reserves the right to make changes without prior notice.

QUANTITY FOR MODEL EVMSG1

Pump Type	N°																											
	4	5-1	5-2	5-3	5-4	6	7	21	31	32-1	43-2	43-3	43-5	43-7	44-1	46	47	48	52-1	75	75-1	107	111	111-3	111-4	111-5	115-1	115-4	115-5
EVMSG1 2/0.37	1	1	/	1	1	1	1	2	1	1	1	1	/	/	1	2	1	1	1	1	4	2	1	1	1	1	2	1	1
EVMSG1 3/0.37	1	1	1	1	1	1	1	3	1	1	3	1	/	/	1	2	1	1	1	1	4	3	1	1	1	1	2	1	1
EVMSG1 4/0.37	1	1	2	1	1	1	1	4	1	1	5	1	/	/	1	2	1	1	1	1	4	4	1	1	1	1	2	1	1
EVMSG1 5/0.37	1	1	3	1	1	1	1	5	1	1	7	1	1	/	1	2	1	1	1	1	4	5	1	1	1	1	2	1	1
EVMSG1 6/0.37	1	1	4	1	1	1	1	6	1	1	9	1	/	/	1	2	1	1	1	1	4	6	1	1	1	1	2	1	1
EVMSG1 7/0.37	1	1	5	1	1	1	1	7	1	1	11	1	/	/	1	2	1	1	1	1	4	7	1	1	1	1	2	1	1
EVMSG1 8/0.37	1	1	6	1	1	1	1	8	1	1	13	1	/	/	1	2	1	1	1	1	4	8	1	1	1	1	2	1	1
EVMSG1 9/0.55	1	1	7	1	1	1	1	9	1	1	15	1	1	/	1	2	1	1	1	1	4	9	1	1	1	1	2	1	1
EVMSG1 10/0.55	1	1	8	1	1	1	1	10	1	1	17	1	/	/	1	2	1	1	1	1	4	10	1	1	1	1	2	1	1
EVMSG1 11/0.55	1	1	9	1	1	1	1	11	1	1	19	1	/	/	1	2	1	1	1	1	4	11	1	1	1	1	2	1	1
EVMSG1 12/0.55	1	1	10	1	1	1	1	12	1	1	21	1	/	/	1	2	1	1	1	1	4	12	1	1	1	1	2	1	1
EVMSG1 13/0.55	1	1	10	2	1	1	1	13	1	1	20	2	1	1	2	2	1	1	2	1	4	13	1	1	1	1	2	1	1
EVMSG1 14/0.75	1	1	11	2	1	1	1	14	1	1	22	2	/	1	2	2	1	1	2	1	4	14	1	1	1	1	2	1	1
EVMSG1 16/0.75	1	1	13	2	1	1	1	16	1	1	26	2	/	1	2	2	1	1	2	1	4	16	1	1	1	1	2	1	1
EVMSG1 18/1.1	1	1	15	2	1	1	1	18	1	1	30	2	/	1	2	2	1	1	2	1	4	18	1	1	1	1	2	1	1
EVMSG1 20/1.1	1	1	17	2	1	1	1	20	1	1	34	2	/	1	2	2	1	1	2	1	4	20	1	1	1	1	2	1	1
EVMSG1 22/1.1	1	1	19	2	1	1	1	22	1	1	38	2	/	1	2	2	1	1	2	1	4	22	1	1	1	1	2	1	1
EVMSG1 24/1.1	1	1	21	2	1	1	1	24	1	1	42	2	/	1	2	2	1	1	2	1	4	24	1	1	1	1	2	1	1
EVMSG1 26/1.1	1	1	23	2	1	1	1	26	1	1	46	2	/	1	2	2	1	1	2	1	4	26	1	1	1	1	2	1	1
EVMSG1 27/1.5	1	1	24	2	1	1	1	27	1	1	48	2	/	1	2	2	1	1	2	1	4	27	1	1	1	1	2	1	1
EVMSG1 29/1.5	1	1	26	2	1	1	1	29	1	1	52	2	/	1	2	2	1	1	2	1	4	29	1	1	1	1	2	1	1
EVMSG1 32/1.5	1	1	29	2	1	1	1	32	1	1	58	2	/	1	2	2	1	1	2	1	4	32	1	1	1	1	2	1	1
EVMSG1 34/1.5	1	1	31	2	1	1	1	34	1	1	62	2	/	1	2	2	1	1	2	1	4	34	1	1	1	1	2	1	1
EVMSG1 37/2.2	1	1	34	2	1	1	1	37	1	1	68	2	/	1	2	2	1	1	2	1	4	37	1	1	1	1	2	1	1
EVMSG1 39/2.2	1	1	36	2	1	1	1	39	1	1	72	2	/	1	2	2	1	1	2	1	4	39	1	1	1	1	2	1	1

Pump Type	N°																					
	117*	120-1	120-3	120-6	120-11*	120-13	128-1	128-6	130-1	130-2	131-1	135-1	135-6	137-1	140	162	212	212-1	212-2	219*	245	273-1
EVMSG1 2/0.37	2	4	4	4	4	4	4	4	3	4	1	4	4	1	2	1	1	4	1	2	2	4
EVMSG1 3/0.37	2	4	4	4	4	4	4	4	3	4	1	4	4	1	2	1	1	4	1	2	2	4
EVMSG1 4/0.37	2	4	4	4	4	4	4	4	3	4	1	4	4	1	2	1	1	4	1	2	2	4
EVMSG1 5/0.37	2	4	4	4	4	4	4	4	3	4	1	4	4	1	2	1	1	4	1	2	2	4
EVMSG1 6/0.37	2	4	4	4	4	4	4	4	3	4	1	4	4	1	2	1	1	4	1	2	2	4
EVMSG1 7/0.37	2	4	4	4	4	4	4	4	3	4	1	4	4	1	2	1	1	4	1	2	2	4
EVMSG1 8/0.37	2	4	4	4	4	4	4	4	3	4	1	4	4	1	2	1	1	4	1	2	2	4
EVMSG1 9/0.55	2	4	4	4	4	4	4	4	3	4	1	4	4	1	2	1	1	4	1	2	2	4
EVMSG1 10/0.55	2	4	4	4	4	4	4	4	3	4	1	4	4	1	2	1	1	4	1	2	2	4
EVMSG1 11/0.55	2	4	4	4	4	4	4	4	3	4	1	4	4	1	2	1	1	4	1	2	2	4
EVMSG1 12/0.55	2	4	4	4	4	4	4	4	3	4	1	4	4	1	2	1	1	4	1	2	2	4
EVMSG1 13/0.55	2	4	4	4	4	4	4	4	3	4	1	4	4	1	2	1	1	4	1	2	2	4
EVMSG1 14/0.75	2	4	4	4	4	4	4	4	3	4	1	4	4	1	2	1	1	4	1	2	2	4
EVMSG1 16/0.75	2	4	4	4	4	4	4	4	3	4	1	4	4	1	2	1	1	4	1	2	2	4
EVMSG1 18/1.1	2	4	4	4	4	4	4	4	3	4	1	4	4	1	2	1	1	4	1	2	2	4
EVMSG1 20/1.1	2	4	4	4	4	4	4	4	3	4	1	4	4	1	2	1	1	4	1	2	2	4
EVMSG1 22/1.1	2	4	4	4	4	4	4	4	3	4	1	4	4	1	2	1	1	4	1	2	2	4
EVMSG1 24/1.1	2	4	4	4	4	4	4	4	3	4	1	4	4	1	2	1	1	4	1	2	2	4
EVMSG1 26/1.1	2	4	4	4	4	4	4	4	3	4	1	4	4	1	2	1	1	4	1	2	2	4
EVMSG1 27/1.5	/	4	4	4	/	4	4	4	3	4	1	4	4	1	2	1	1	4	1	/	2	4
EVMSG1 29/1.5	/	4	4	4	/	4	4	4	3	4	1	4	4	1	2	1	1	4	1	/	2	4
EVMSG1 32/1.5	/	4	4	4	/	4	4	4	3	4	1	4	4	1	2	1	1	4	1	/	2	4
EVMSG1 34/1.5	/	4	4	4	/	4	4	4	3	4	1	4	4	1	2	1	1	4	1	/	2	4
EVMSG1 37/2.2	/	4	4	4	/	4	4	4	3	4	1	4	4	1	2	1	1	4	1	/	2	4
EVMSG1 39/2.2	/	4	4	4	/	4	4	4	3	4	1	4	4	1	2	1	1	4	1	/	2	4

* only for Oval flange (N)

EBARA Pumps Europe S.p.A. reserves the right to make changes without prior notice.

PERFORMANCE CURVE
EVMS(L)3

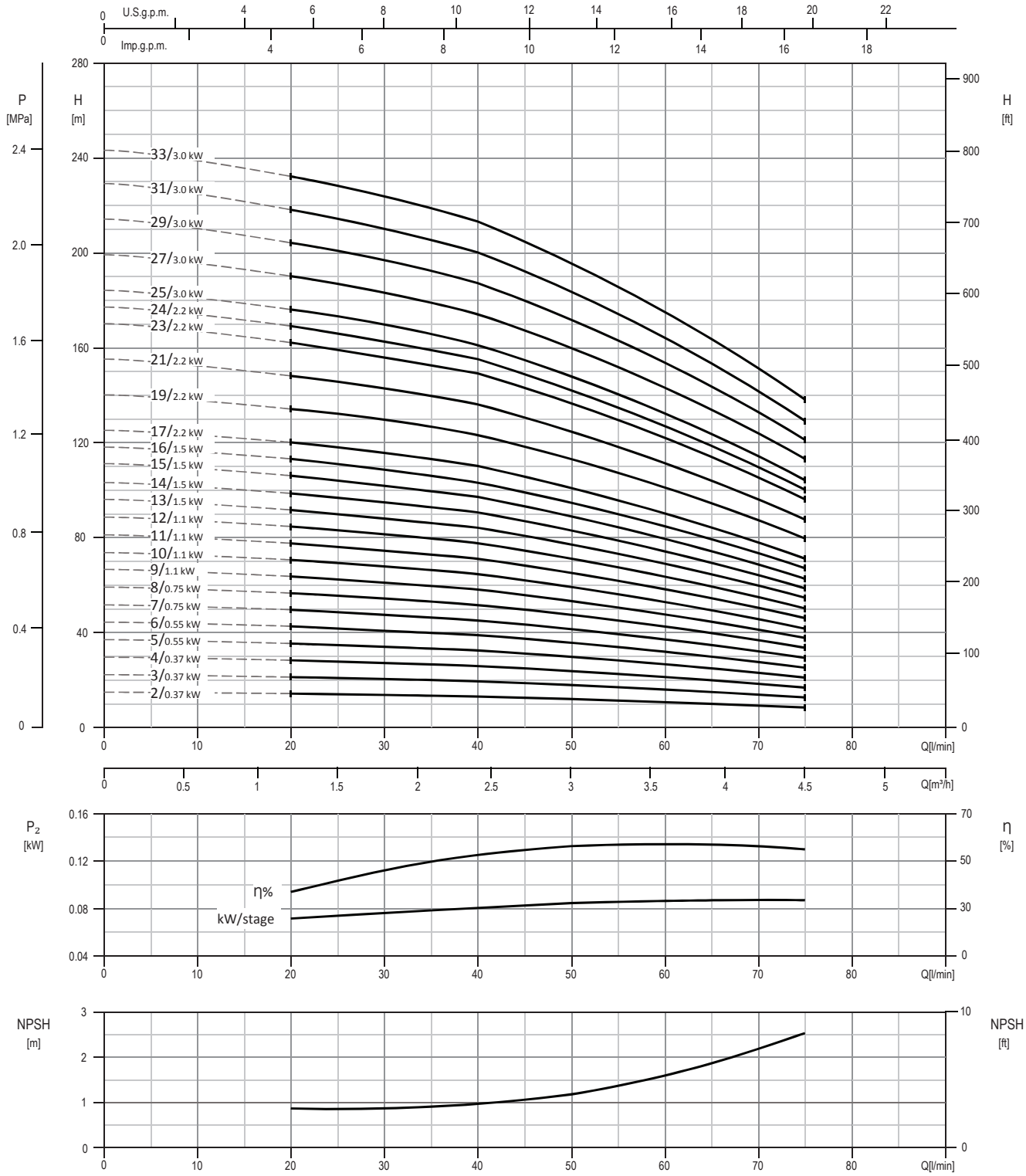

Test standard: ISO 9906:2012 - Grade 3B

EBARA Pumps Europe S.p.A. reserves the right to make changes without prior notice.

TECHNICAL DATA
EVMS(L)3

Dimensional sketch

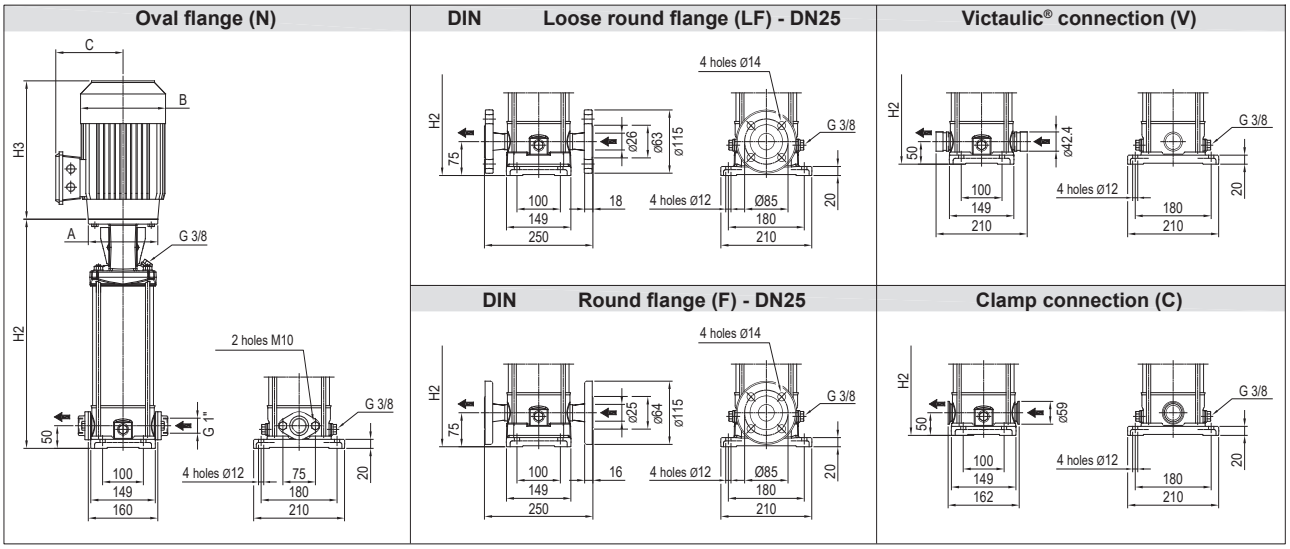

Dimensions [mm] and Weights [Kg]

Pump Type	Pmax [MPa]	Motor kW	Size	A Ø	1~ B	1~ C	3~ B	3~ C	Oval flange (N) H2	H2+H3 1 ~	H2+H3 3 ~	Weight Pump	Weight Pump + Motor 1 ~	Weight Pump + Motor 3 ~	Loose round flange (LF) Round flange (F) H2	H2+H3 1 ~	H2+H3 3 ~	Weight Pump	Weight Pump + Motor 1 ~	Weight Pump + Motor 3 ~	Victaulic® connection (V) Clamp connection (C) H2	H2+H3 1 ~	H2+H3 3 ~	Weight Pump	Weight Pump + Motor 1 ~	Weight Pump + Motor 3 ~
EVMS(L)3 2/0.37	1.6	0.37	71	105	141	119	141	119	250	452	452	9.7	16.2	16.2	275	477	477	10.5	17.0	17.0	250	452	452	9.7	16.2	16.2
EVMS(L)3 3/0.37	1.6	0.37	71	105	141	119	141	119	271	473	473	10.1	16.6	16.6	296	498	498	10.9	17.4	17.4	271	473	473	10.2	16.7	16.7
EVMS(L)3 4/0.37	1.6	0.37	71	105	141	119	141	119	292	494	494	10.6	17.1	17.1	317	519	519	11.3	17.8	17.8	292	494	494	10.6	17.1	17.1
EVMS(L)3 5/0.55	1.6	0.55	71	105	141	119	141	119	313	515	515	11	18.0	18.0	338	540	540	11.8	18.8	18.8	313	515	515	11.1	18.1	18.1
EVMS(L)3 6/0.55	1.6	0.55	71	105	141	119	141	119	334	536	536	11.4	18.4	18.4	359	561	561	12.2	19.2	19.2	334	536	536	11.5	18.5	18.5
EVMS(L)3 7/0.75	1.6	0.75	80	120	160	142	141	102	365	594	598	12.4	22.4	20.9	390	619	623	13.1	23.1	21.6	365	594	598	12.4	22.4	20.9
EVMS(L)3 8/0.75	1.6	0.75	80	120	160	142	141	102	386	615	619	12.8	22.8	21.3	411	640	644	13.6	23.6	22.1	386	615	619	12.9	22.9	21.4
EVMS(L)3 9/1.1	1.6	1.1	80	120	160	142	141	102	407	636	651	13.2	24.2	23.2	432	661	676	14	25.0	24.0	407	636	651	13.3	24.3	23.3
EVMS(L)3 10/1.1	1.6	1.1	80	120	160	142	141	102	428	657	672	13.7	24.7	23.7	453	682	697	14.5	25.5	24.5	428	657	672	13.7	24.7	23.7
EVMS(L)3 11/1.1	1.6	1.1	80	120	160	142	141	102	449	678	693	14.1	25.1	24.1	474	703	718	14.9	25.9	24.9	449	678	693	14.2	25.2	24.2
EVMS(L)3 12/1.1	1.6	1.1	80	120	160	142	141	102	470	699	714	14.6	25.6	24.6	495	724	739	15.4	26.4	25.4	470	699	714	14.6	25.6	24.6
EVMS(L)3 13/1.5	1.6	1.5	90	140	172	140	160	119	501	779	792	15.3	33.1	28.8	526	804	817	16.1	33.9	29.6	501	779	792	15.3	33.1	28.8
EVMS(L)3 14/1.5	1.6	1.5	90	140	172	140	160	119	522	800	813	15.7	33.5	29.2	547	825	838	16.5	34.3	30.0	522	800	813	15.8	33.6	29.3
EVMS(L)3 15/1.5	1.6	1.5	90	140	172	140	160	119	543	821	834	16.2	34.0	29.7	568	846	859	17	34.8	30.5	543	821	834	16.3	34.1	29.8
EVMS(L)3 16/1.5	1.6	1.5	90	140	172	140	160	119	564	842	855	17.3	35.1	30.8	589	867	880	18	35.8	31.5	564	842	855	17.3	35.1	30.8
EVMS(L)3 17/2.2	1.6	2.2	90	140	172	140	160	119	585	863	876	17.7	37.2	32.7	610	888	901	18.5	38.0	33.5	585	863	876	17.7	37.2	32.7
EVMS(L)3 19/2.2	1.6	2.2	90	140	172	140	160	119	627	905	918	18.7	38.2	33.7	652	930	943	19.5	39.0	34.5	627	905	918	18.7	38.2	33.7
EVMS(L)3 21/2.2	1.6	2.2	90	140	172	140	160	119	669	947	960	19.6	39.1	34.6	694	972	985	20.4	39.9	35.4	669	947	960	19.6	39.1	34.6
EVMS(L)3 23/2.2	2.5	2.2	90	140	172	140	160	119	-	-	-	-	-	-	736	1014	1027	21.4	40.9	36.4	711	989	1002	20.6	40.1	35.6
EVMS(L)3 24/2.2	2.5	2.2	90	140	172	140	160	119	-	-	-	-	-	-	757	1035	1048	21.8	41.3	36.8	732	1010	1023	21.1	40.6	36.1
EVMS(L)3 25/3.0	2.5	3.0	100	160	-	-	176	123	-	-	-	-	-	-	788	-	1130	22.4	-	44.4	763	-	1105	21.7	-	43.7
EVMS(L)3 27/3.0	2.5	3.0	100	160	-	-	176	123	-	-	-	-	-	-	830	-	1172	23.4	-	45.4	805	-	1147	22.6	-	44.6
EVMS(L)3 29/3.0	2.5	3.0	100	160	-	-	176	123	-	-	-	-	-	-	872	-	1214	24.3	-	46.3	847	-	1189	23.6	-	45.6
EVMS(L)3 31/3.0	2.5	3.0	100	160	-	-	176	123	-	-	-	-	-	-	914	-	1256	25.3	-	47.3	889	-	1231	24.6	-	46.6
EVMS(L)3 33/3.0	2.5	3.0	100	160	-	-	176	123	-	-	-	-	-	-	956	-	1298	26.1	-	48.1	931	-	1273	25.4	-	47.4

1.6 MPa=16 bar; 2.5 MPa=25 bar
- not available model

EBARA

EBARA Pumps Europe

EBARA Pumps Europe S.p.A. reserves the right to make changes without prior notice.

SECTIONAL VIEW
EVMS(L)3

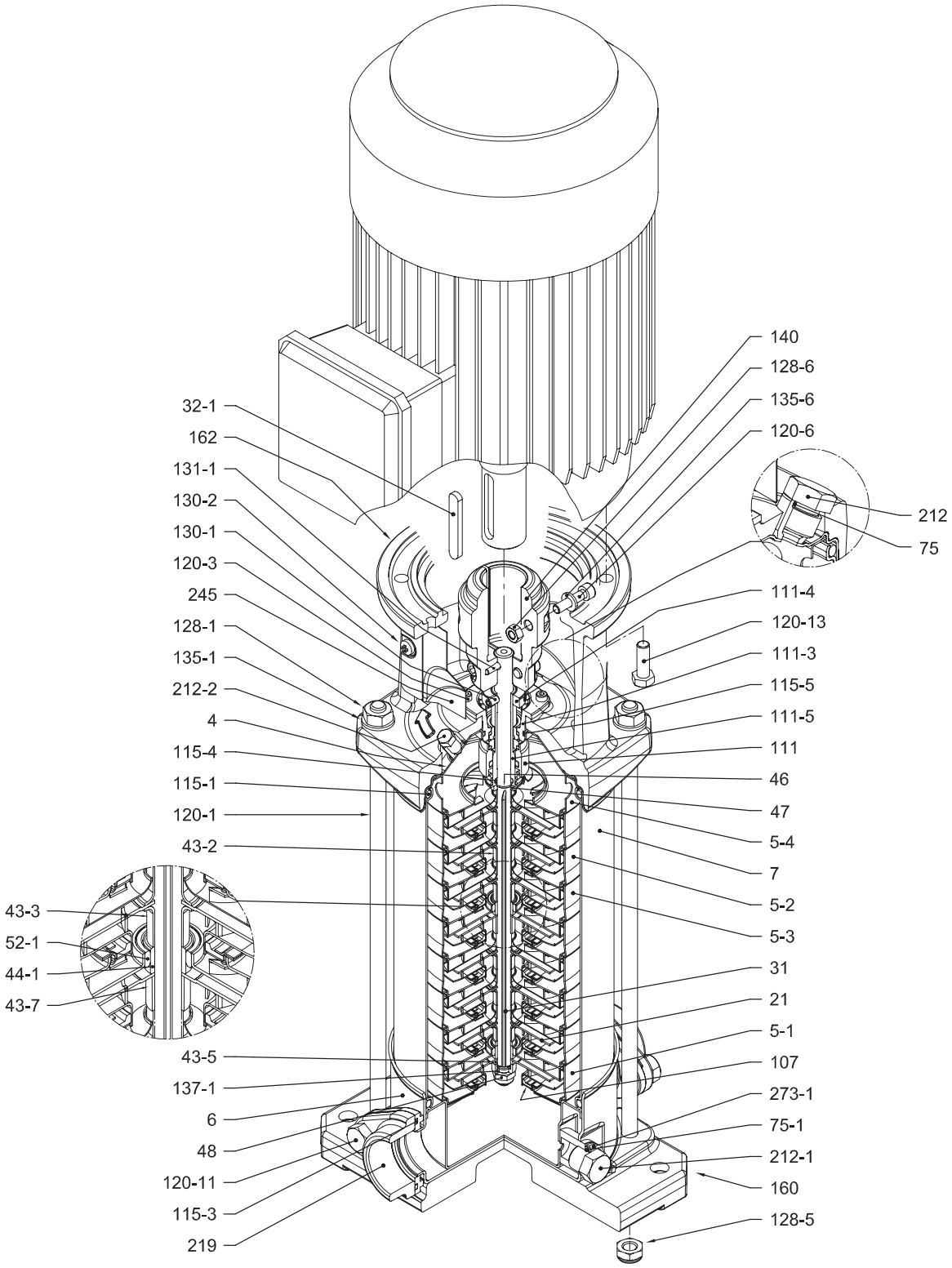

with Oval flange (N)

EBARA Pumps Europe S.p.A. reserves the right to make changes without prior notice.

PIPE CONNECTION
EVMS(L)3

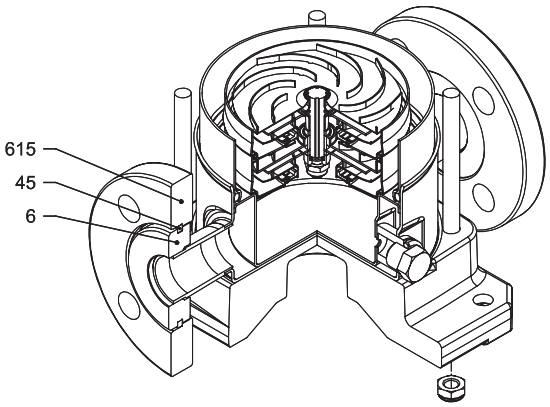

with Loose round flange (LF)

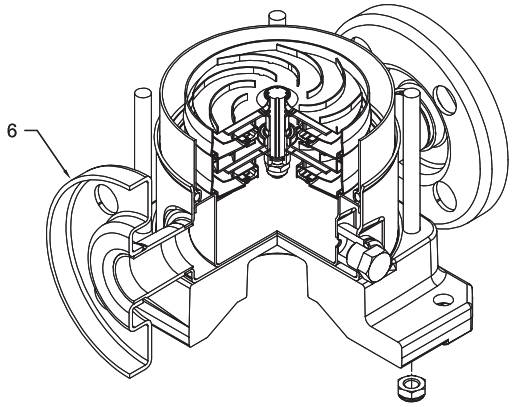

with Round flange (F)

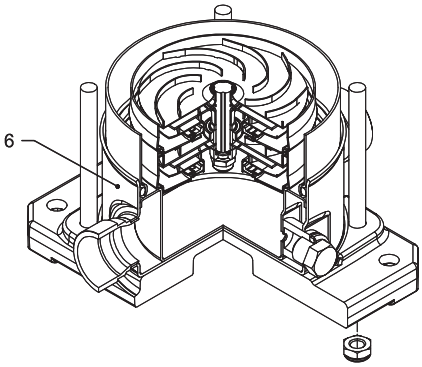

with Victaulic® connection (V)

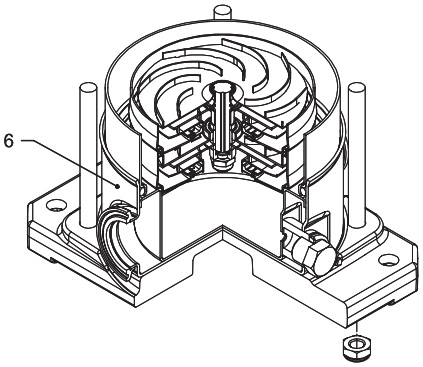

with Clamp connection (C)

EBARA Pumps Europe S.p.A. reserves the right to make changes without prior notice.

SECTIONAL TABLE
EVMS(L)3

N°	PART NAME		MATERIAL		DIMENSIONS	STANDARD
			EVMS	EVMSL		
4	Casing cover		EN 1.4301 (AISI 304)	EN 1.4404 (AISI 316L)		
5-1	Suction casing		EN 1.4301 (AISI 304)	EN 1.4404 (AISI 316L)		
5-2	Intermediate casing		EN 1.4301 (AISI 304)	EN 1.4404 (AISI 316L)		
5-3	Intermediate casing with bearing		EN 1.4301 (AISI 304)	EN 1.4404 (AISI 316L)		
5-4	Discharge casing		EN 1.4301 (AISI 304)	EN 1.4404 (AISI 316L)		
6	Bottom casing		EN 1.4301 (AISI 304)	EN 1.4404 (AISI 316L)		
7	Outer casing		EN 1.4301 (AISI 304)	EN 1.4404 (AISI 316L)		
21	Impeller		EN 1.4301 (AISI 304)	EN 1.4404 (AISI 316L)		
31	Shaft		EN 1.4301 (AISI 304)	EN 1.4404 (AISI 316L)		
32-1	Adjuster key		EN 1.4301 (AISI 304)			
43-2	Shaft sleeve (intermediate)		EN 1.4301 (AISI 304)	EN 1.4404 (AISI 316L)		
43-3	Shaft sleeve (bearing)		EN 1.4301 (AISI 304)	EN 1.4404 (AISI 316L)		
43-5	Shaft sleeve (last stage)		EN 1.4301 (AISI 304)	EN 1.4404 (AISI 316L)		
43-7	Spacer		EN 1.4301 (AISI 304)	EN 1.4404 (AISI 316L)		
44-1	Shaft sleeve bearing		Tungsten carbide			
45	Flange holder		EN 1.4301 (AISI 304)			
46	Ring (mechanical seal)		EN 1.4404 (AISI 316L)			
47	Ring holder		EN 1.4301 (AISI 304)	EN 1.4404 (AISI 316L)		
48	Impeller nut		EN 1.4301 (AISI 304) with inox insert	EN 1.4401 (AISI 316) with inox insert	M8	
52-1	Sleeve bearing		Tungsten carbide			
75	O-Ring (priming plug)		EPDM / FPM		Ø12.37x2.62	OR 3050
75-1	O-Ring (drainage plug)		EPDM / FPM			
107	Liner ring		EN 1.4301 (AISI 304) + PPS	EN 1.4404 (AISI 316L) + PPS		
111	Mechanical seal		see pages 6-7			
111-3	Mechanical seal seat		EN 1.4308 (ASTM CF8)	EN 1.4408 (ASTM CF8M)		
111-4	Seal holder		EN 1.4301 (AISI 304)			
111-5	Mechanical seal cartridge sleeve		EN 1.4301 (AISI 304)	EN 1.4404 (AISI 316L)		
115-1	O-Ring (outer casing)		EPDM / FPM		Ø129.54x5.34	OR 6945
115-3	O-Ring		EPDM / FPM			
115-4	O-Ring (cartridge sleeve)		EPDM / FPM		Ø11.91x2.62	OR 4093
115-5	O-Ring (seal flange)		EPDM / FPM		Ø32.99x2.62	OR 4175
120-1	Tie-rod		EN 1.4057 (AISI 431)		M10	
120-3	Screw (seal flange)		A2-70		M4x10	ISO 4762
120-6	Screw (pump coupling)		Galvanized steel		M6x25	ISO 4762
120-11	Screw (counterflange)		A2-70			
120-13	Screw for motor	MEC 71-80	Galvanized steel 8.8 strength class ISO 898/1		M6x20	ISO 4017
		MEC 90-100			M8x20	ISO 4017
128-1	Nut (tie rod)		A2-70		M10	ISO 4032
128-5	Nut (tie rod)		A2-70		M10	UNI 7474
128-6	Nut (aluminium coupling)	MEC 71-80-90-100-112	Galvanized steel		M6	ISO 4032
130-1	Set screw		EN 1.4301 (AISI 304)		M5x8	ISO 4026
130-2	Screw for coupling guard		A2-70		M5x6	UNI 7687
131-1	Pin for shaft		Carbon Steel		Ø4x32	ISO 2338
135-1	Washer (tie rod)		EN 1.4301 (AISI 304)		Ø10.5x21x2	ISO 7089
135-6	Washer (aluminium coupling)	up to 4.0 kW	Carbon Steel		Ø6	
137-1	Impeller spacer		EN 1.4301 (AISI 304)	EN 1.4404 (AISI 316L)		
140	Coupling	up to 4.0 kW	Die cast Aluminium EN AB-AISI11Cu2 (Fe)			
160	Base		Die cast Aluminium EN AB-AISI11Cu2 (Fe)			
162	Motor bracket		Cast iron EN-GJL-250			
212	Priming plug		EN 1.4301 (AISI 304)	EN 1.4404 (AISI 316L)	G 3/8	
212-1	Drainage plug		EN 1.4301 (AISI 304)	EN 1.4404 (AISI 316L)	G 3/8	
212-2	Venting plug		EN 1.4404 (AISI 316L)			
219	Counter flange	flange type: N	EN 1.4308 (ASTM CF8)	EN 1.4408 (ASTM CF8M)		
		flange type: LF-F-V-C	EN 1.4301 (AISI 304)	EN 1.4404 (AISI 316L)		
245	Coupling guard		EN 1.4301 (AISI 304)			
273-1	Washer (drainage plug)		EN 1.4301 (AISI 304)	EN 1.4404 (AISI 316L)		
615	Flange		Nodular Cast Iron			

EBARA Pumps Europe S.p.A. reserves the right to make changes without prior notice.

QUANTITY FOR MODEL EVMS(L)3

Pump Type	N°																													
	4	5-1	5-2	5-3	5-4	6	7	21	31	32-1	43-2	43-3	43-5	43-7	44-1	45**	46	47	48	52-1	75	75-1	107	111	111-3	111-4	111-5	115-1	115-3*	115-4	115-5
EVMS(L)3 2/0.37	1	1	/	1	1	1	1	2	1	1	1	1	/	/	1	4	2	1	1	1	1	2	2	1	1	1	1	2	2	1	1
EVMS(L)3 3/0.37	1	1	1	1	1	1	1	3	1	1	3	1	/	/	1	4	2	1	1	1	1	2	3	1	1	1	1	2	2	1	1
EVMS(L)3 4/0.37	1	1	2	1	1	1	1	4	1	1	5	1	/	/	1	4	2	1	1	1	1	2	4	1	1	1	1	2	2	1	1
EVMS(L)3 5/0.55	1	1	3	1	1	1	1	5	1	1	7	1	1	/	1	4	2	1	1	1	1	2	5	1	1	1	1	2	2	1	1
EVMS(L)3 6/0.55	1	1	4	1	1	1	1	6	1	1	9	1	/	/	1	4	2	1	1	1	1	2	6	1	1	1	1	2	2	1	1
EVMS(L)3 7/0.75	1	1	5	1	1	1	1	7	1	1	11	1	/	/	1	4	2	1	1	1	1	2	7	1	1	1	1	2	2	1	1
EVMS(L)3 8/0.75	1	1	6	1	1	1	1	8	1	1	13	1	/	/	1	4	2	1	1	1	1	2	8	1	1	1	1	2	2	1	1
EVMS(L)3 9/1.1	1	1	7	1	1	1	1	9	1	1	15	1	1	/	1	4	2	1	1	1	1	2	9	1	1	1	1	2	2	1	1
EVMS(L)3 10/1.1	1	1	8	1	1	1	1	10	1	1	17	1	/	/	1	4	2	1	1	1	1	2	10	1	1	1	1	2	2	1	1
EVMS(L)3 11/1.1	1	1	9	1	1	1	1	11	1	1	19	1	/	/	1	4	2	1	1	1	1	2	11	1	1	1	1	2	2	1	1
EVMS(L)3 12/1.1	1	1	10	1	1	1	1	12	1	1	21	1	/	/	1	4	2	1	1	1	1	2	12	1	1	1	1	2	2	1	1
EVMS(L)3 13/1.5	1	1	10	2	1	1	1	13	1	1	20	2	1	1	2	4	2	1	1	2	1	2	13	1	1	1	1	2	2	1	1
EVMS(L)3 14/1.5	1	1	11	2	1	1	1	14	1	1	22	2	/	1	2	4	2	1	1	2	1	2	14	1	1	1	1	2	2	1	1
EVMS(L)3 15/1.5	1	1	12	2	1	1	1	15	1	1	24	2	/	1	2	4	2	1	1	2	1	2	15	1	1	1	1	2	2	1	1
EVMS(L)3 16/1.5	1	1	13	2	1	1	1	16	1	1	26	2	/	1	2	4	2	1	1	2	1	2	16	1	1	1	1	2	2	1	1
EVMS(L)3 17/2.2	1	1	14	2	1	1	1	17	1	1	28	2	1	1	2	4	2	1	1	2	1	2	17	1	1	1	1	2	2	1	1
EVMS(L)3 19/2.2	1	1	16	2	1	1	1	19	1	1	32	2	/	1	2	4	2	1	1	2	1	2	19	1	1	1	1	2	2	1	1
EVMS(L)3 21/2.2	1	1	18	2	1	1	1	21	1	1	36	2	1	1	2	4	2	1	1	2	1	2	21	1	1	1	1	2	2	1	1
EVMS(L)3 23/2.2	1	1	20	2	1	1	1	23	1	1	40	2	/	1	2	4	2	1	1	2	1	2	23	1	1	1	1	2	/	1	1
EVMS(L)3 24/2.2	1	1	21	2	1	1	1	24	1	1	42	2	/	1	2	4	2	1	1	2	1	2	24	1	1	1	1	2	/	1	1
EVMS(L)3 25/3.0	1	1	22	2	1	1	1	25	1	1	44	2	/	1	2	4	2	1	1	2	1	2	25	1	1	1	1	2	/	1	1
EVMS(L)3 27/3.0	1	1	24	2	1	1	1	27	1	1	48	2	/	1	2	4	2	1	1	2	1	2	27	1	1	1	1	2	/	1	1
EVMS(L)3 29/3.0	1	1	26	2	1	1	1	29	1	1	52	2	/	1	2	4	2	1	1	2	1	2	29	1	1	1	1	2	/	1	1
EVMS(L)3 31/3.0	1	1	28	2	1	1	1	31	1	1	56	2	/	1	2	4	2	1	1	2	1	2	31	1	1	1	1	2	/	1	1
EVMS(L)3 33/3.0	1	1	30	2	1	1	1	33	1	1	60	2	/	1	2	4	2	1	1	2	1	2	33	1	1	1	1	2	/	1	1

Pump Type	N°																										
	120-1	120-3	120-6	120-11*	120-13	128-1	128-5	128-6	130-1	130-2	131-1	135-1	135-6	137-1	140	160	162	212	212-1	212-2	219*	245	273-1	615**
EVMS(L)3 2/0.37	4	4	4	4	4	4	4	4	3	4	1	4	4	1	2	1	1	1	2	1	2	2	2	2
EVMS(L)3 3/0.37	4	4	4	4	4	4	4	4	3	4	1	4	4	1	2	1	1	1	2	1	2	2	2	2
EVMS(L)3 4/0.37	4	4	4	4	4	4	4	4	3	4	1	4	4	1	2	1	1	1	2	1	2	2	2	2
EVMS(L)3 5/0.55	4	4	4	4	4	4	4	4	3	4	1	4	4	1	2	1	1	1	2	1	2	2	2	2
EVMS(L)3 6/0.55	4	4	4	4	4	4	4	4	3	4	1	4	4	1	2	1	1	1	2	1	2	2	2	2
EVMS(L)3 7/0.75	4	4	4	4	4	4	4	4	3	4	1	4	4	1	2	1	1	1	2	1	2	2	2	2
EVMS(L)3 8/0.75	4	4	4	4	4	4	4	4	3	4	1	4	4	1	2	1	1	1	2	1	2	2	2	2
EVMS(L)3 9/1.1	4	4	4	4	4	4	4	4	3	4	1	4	4	1	2	1	1	1	2	1	2	2	2	2
EVMS(L)3 10/1.1	4	4	4	4	4	4	4	4	3	4	1	4	4	1	2	1	1	1	2	1	2	2	2	2
EVMS(L)3 11/1.1	4	4	4	4	4	4	4	4	3	4	1	4	4	1	2	1	1	1	2	1	2	2	2	2
EVMS(L)3 12/1.1	4	4	4	4	4	4	4	4	3	4	1	4	4	1	2	1	1	1	2	1	2	2	2	2
EVMS(L)3 13/1.5	4	4	4	4	4	4	4	4	3	4	1	4	4	1	2	1	1	1	2	1	2	2	2	2
EVMS(L)3 14/1.5	4	4	4	4	4	4	4	4	3	4	1	4	4	1	2	1	1	1	2	1	2	2	2	2
EVMS(L)3 15/1.5	4	4	4	4	4	4	4	4	3	4	1	4	4	1	2	1	1	1	2	1	2	2	2	2
EVMS(L)3 16/1.5	4	4	4	4	4	4	4	4	3	4	1	4	4	1	2	1	1	1	2	1	2	2	2	2
EVMS(L)3 17/2.2	4	4	4	4	4	4	4	4	3	4	1	4	4	1	2	1	1	1	2	1	2	2	2	2
EVMS(L)3 19/2.2	4	4	4	4	4	4	4	4	3	4	1	4	4	1	2	1	1	1	2	1	2	2	2	2
EVMS(L)3 21/2.2	4	4	4	4	4	4	4	4	3	4	1	4	4	1	2	1	1	1	2	1	2	2	2	2
EVMS(L)3 23/2.2	4	4	4	/	4	4	4	4	3	4	1	4	4	1	2	1	1	1	2	1	/	2	2	2
EVMS(L)3 24/2.2	4	4	4	/	4	4	4	4	3	4	1	4	4	1	2	1	1	1	2	1	/	2	2	2
EVMS(L)3 25/3.0	4	4	4	/	4	4	4	4	3	4	1	4	4	1	2	1	1	1	2	1	/	2	2	2
EVMS(L)3 27/3.0	4	4	4	/	4	4	4	4	3	4	1	4	4	1	2	1	1	1	2	1	/	2	2	2
EVMS(L)3 29/3.0	4	4	4	/	4	4	4	4	3	4	1	4	4	1	2	1	1	1	2	1	/	2	2	2
EVMS(L)3 31/3.0	4	4	4	/	4	4	4	4	3	4	1	4	4	1	2	1	1	1	2	1	/	2	2	2
EVMS(L)3 33/3.0	4	4	4	/	4	4	4	4	3	4	1	4	4	1	2	1	1	1	2	1	/	2	2	2

* only for Oval flange (N)

** only for Loose round flange (LF)

EBARA Pumps Europe S.p.A. reserves the right to make changes without prior notice.

PERFORMANCE CURVE
EVMSG3

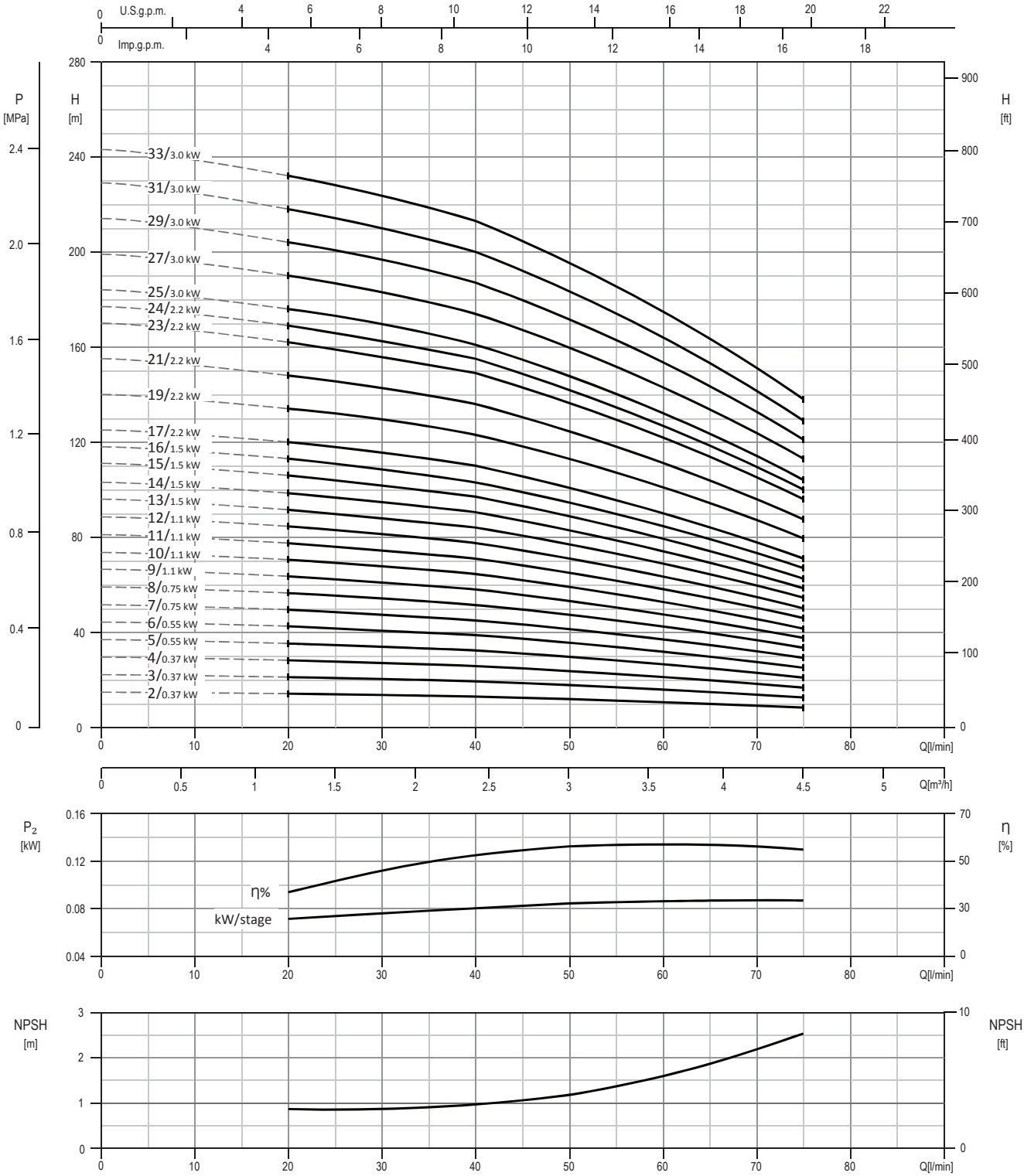

Test standard: ISO 9906:2012 - Grade 3B

EBARA Pumps Europe

EBARA Pumps Europe S.p.A. reserves the right to make changes without prior notice.

TECHNICAL DATA
EVMSG3

Dimensional sketch

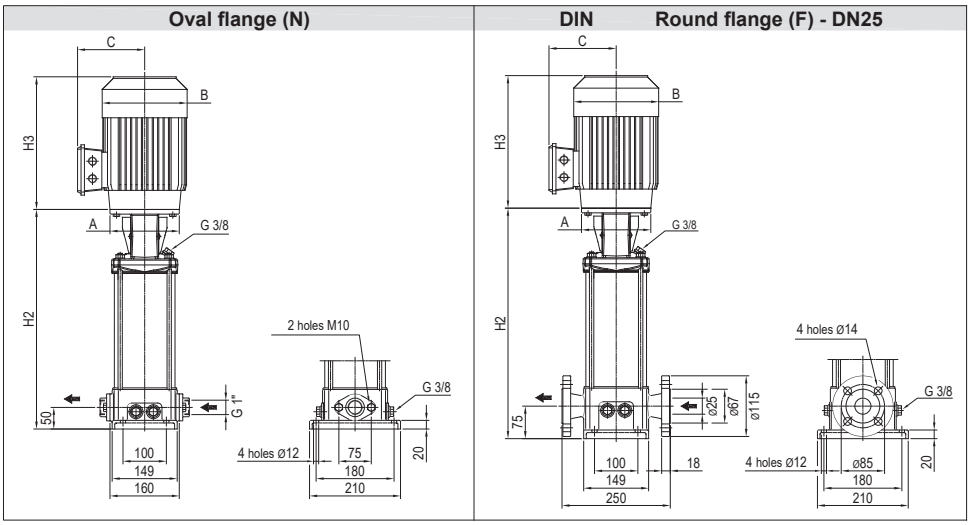

Dimensions [mm] and Weights [Kg]

Pump Type	Pmax [MPa]	Motor kW	Size	A Ø	1~ B	1~ C	3~ B	3~ C	Oval flange (N) H2	H2+H3 1~	H2+H3 3~	Weight Pump	Weight Pump + Motor 1~	Weight Pump + Motor 3~	Round flange (F) H2	H2+H3 1~	H2+H3 3~	Weight Pump	Weight Pump + Motor 1~	Weight Pump + Motor 3~
EVMSG3 2/0.37	1.6	0.37	71	105	141	119	141	119	250	452	452	12.9	19.4	19.4	275	477	477	15.7	22.2	22.2
EVMSG3 3/0.37	1.6	0.37	71	105	141	119	141	119	271	473	473	13.3	19.8	19.8	296	498	498	16.1	22.6	22.6
EVMSG3 4/0.37	1.6	0.37	71	105	141	119	141	119	292	494	494	13.8	20.3	20.3	317	519	519	16.6	23.1	23.1
EVMSG3 5/0.55	1.6	0.55	71	105	141	119	141	119	313	515	515	14.2	21.2	21.2	338	540	540	17	24.0	24.0
EVMSG3 6/0.55	1.6	0.55	71	105	141	119	141	119	334	536	536	14.7	21.7	21.7	359	561	561	17.4	24.4	24.4
EVMSG3 7/0.75	1.6	0.75	80	120	160	142	141	102	365	594	598	15.6	25.6	24.1	390	619	623	18.3	28.3	26.8
EVMSG3 8/0.75	1.6	0.75	80	120	160	142	141	102	386	615	619	16	26.0	24.5	411	640	644	18.8	28.8	27.3
EVMSG3 9/1.1	1.6	1.1	80	120	160	142	141	102	407	636	651	16.4	27.4	26.4	432	661	676	19.2	30.2	29.2
EVMSG3 10/1.1	1.6	1.1	80	120	160	142	141	102	428	657	672	16.9	27.9	26.9	453	682	697	19.7	30.7	29.7
EVMSG3 11/1.1	1.6	1.1	80	120	160	142	141	102	449	678	693	17.3	28.3	27.3	474	703	718	20.1	31.1	30.1
EVMSG3 12/1.1	1.6	1.1	80	120	160	142	141	102	470	699	714	17.8	28.8	27.8	495	724	739	20.6	31.6	30.6
EVMSG3 13/1.5	1.6	1.5	90	140	172	140	160	119	501	779	792	18.5	36.3	32.0	526	804	817	21.3	39.1	34.8
EVMSG3 14/1.5	1.6	1.5	90	140	172	140	160	119	522	800	813	19	36.8	32.5	547	825	838	21.7	39.5	35.2
EVMSG3 15/1.5	1.6	1.5	90	140	172	140	160	119	543	821	834	19.4	37.2	32.9	568	846	859	22.2	40.0	35.7
EVMSG3 16/1.5	1.6	1.5	90	140	172	140	160	119	564	842	855	20.5	38.3	34.0	589	867	880	23.2	41.0	36.7
EVMSG3 17/2.2	1.6	2.2	90	140	172	140	160	119	585	863	876	20.9	40.4	35.9	610	888	901	23.7	43.2	38.7
EVMSG3 19/2.2	1.6	2.2	90	140	172	140	160	119	627	905	918	21.9	41.4	36.9	652	930	943	24.7	44.2	39.7
EVMSG3 21/2.2	1.6	2.2	90	140	172	140	160	119	669	947	960	22.8	42.3	37.8	694	972	985	25.6	45.1	40.6
EVMSG3 23/2.2	2.5	2.2	90	140	172	140	160	119	-	-	-	-	-	-	736	1014	1027	26.6	46.1	41.6
EVMSG3 24/2.2	2.5	2.2	90	140	172	140	160	119	-	-	-	-	-	-	757	1035	1048	27	46.5	42.0
EVMSG3 25/3.0	2.5	3.0	100	160	-	-	176	123	-	-	-	-	-	-	788	-	1130	27.6	-	49.6
EVMSG3 27/3.0	2.5	3.0	100	160	-	-	176	123	-	-	-	-	-	-	830	-	1172	28.6	-	50.6
EVMSG3 29/3.0	2.5	3.0	100	160	-	-	176	123	-	-	-	-	-	-	872	-	1214	29.6	-	51.6
EVMSG3 31/3.0	2.5	3.0	100	160	-	-	176	123	-	-	-	-	-	-	914	-	1256	30.5	-	52.5
EVMSG3 33/3.0	2.5	3.0	100	160	-	-	176	123	-	-	-	-	-	-	956	-	1298	31.3	-	53.3

1.6 MPa=16 bar; 2.5 MPa=25 bar
- not available model

EBARA
EBARA Pumps Europe
EBARA Pumps Europe S.p.A. reserves the right to make changes without prior notice.

SECTIONAL VIEW
EVMSG3

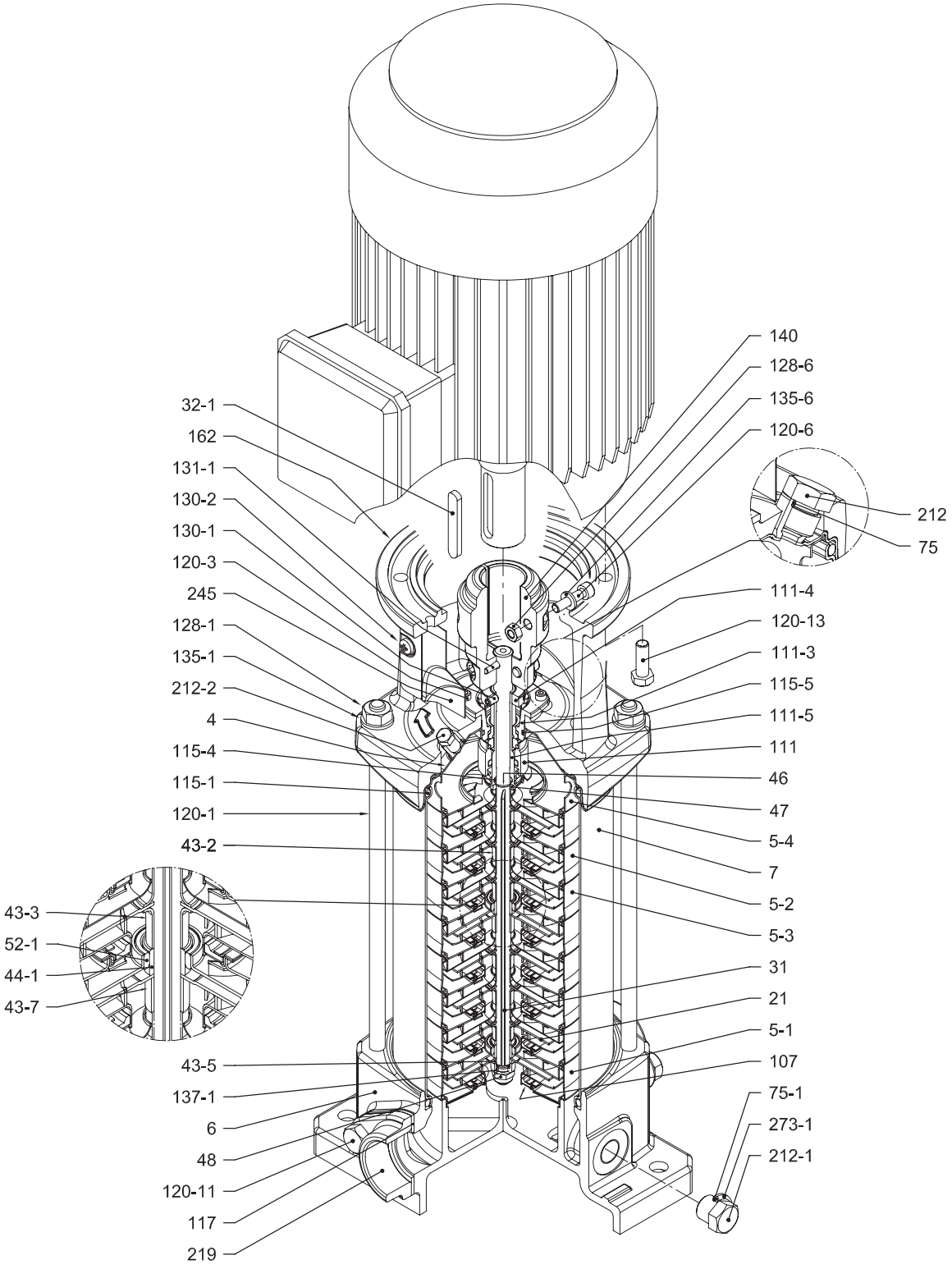

with Oval flange (N)

EBARA Pumps Europe S.p.A. reserves the right to make changes without prior notice.

PIPE CONNECTION
EVMSG3

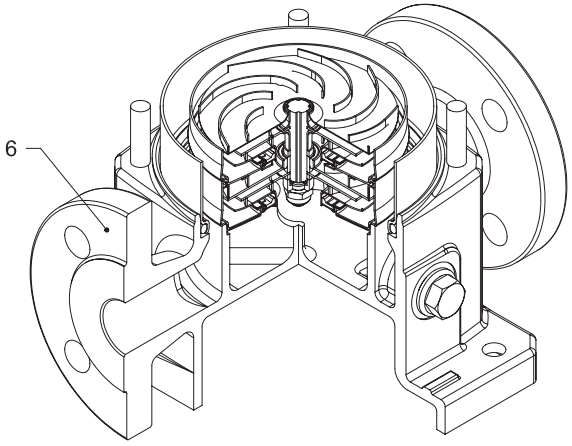

with Round flange (F)

EBARA
EBARA Pumps Europe
EBARA Pumps Europe S.p.A. reserves the right to make changes without prior notice.

SECTIONAL TABLE
EVMSG3

N°	PART NAME		MATERIAL EVMSG	DIMENSIONS	STANDARD
4	Casing cover		EN 1.4301 (AISI 304)		
5-1	Suction casing		EN 1.4301 (AISI 304)		
5-2	Intermediate casing		EN 1.4301 (AISI 304)		
5-3	Intermediate casing with bearing		EN 1.4301 (AISI 304)		
5-4	Discharge casing		EN 1.4301 (AISI 304)		
6	Bottom casing		Cast Iron EN-GJL-250		
7	Outer casing		EN 1.4301 (AISI 304)		
21	Impeller		EN 1.4301 (AISI 304)		
31	Shaft		EN 1.4301 (AISI 304)		
32-1	Adjuster key		EN 1.4301 (AISI 304)		
43-2	Shaft sleeve (intermediate)		EN 1.4301 (AISI 304)		
43-3	Shaft sleeve (bearing)		EN 1.4301 (AISI 304)		
43-5	Shaft sleeve (last stage)		EN 1.4301 (AISI 304)		
43-7	Spacer		EN 1.4301 (AISI 304)		
44-1	Shaft sleeve bearing		Tungsten carbide		
46	Ring (mechanical seal)		EN 1.4404 (AISI 316L)		
47	Ring holder		EN 1.4404 (AISI 316L)		
48	Impeller nut		EN 1.4301 (AISI 304) with inox insert	M8	
52-1	Sleeve bearing		Tungsten carbide		
75	O-Ring (priming plug)		EPDM / FPM	Ø12.37x2.62	OR 3050
75-1	O-Ring (drainage plug)		EPDM / FPM		
107	Liner ring		EN 1.4301 (AISI 304) + PPS		
111	Mechanical seal		see pages 6-7		
111-3	Mechanical seal seat		EN 1.4308 (ASTM CF8)		
111-4	Seal holder		EN 1.4301 (AISI 304)		
111-5	Mechanical seal cartridge sleeve		EN 1.4301 (AISI 304)		
115-1	O-Ring (outer casing)		EPDM / FPM	Ø129.54x5.34	OR 6945
115-4	O-Ring (cartridge sleeve)		EPDM / FPM	Ø11.91x2.62	OR 4093
115-5	O-Ring (seal flange)		EPDM / FPM	Ø32.99x2.62	OR 4175
117	Flange gasket		EPDM / FPM		
120-1	Tie-rod		EN 1.4057 (AISI 431)	M10	
120-3	Screw (seal flange)		A2-70	M4x10	ISO 4762
120-6	Screw (pump coupling)		Galvanized steel	M6x25	ISO 4762
120-11	Screw (counterflange)		A2-70		
120-13	Screw for motor	MEC 71-80	Galvanized steel 8.8 strength class ISO 898/1	M6x20	ISO 4017
		MEC 90-100		M8x20	ISO 4017
128-1	Nut (tie rod)		A2-70	M10	ISO 4032
128-6	Nut (aluminium coupling)	MEC 71-80-90-100-112	Galvanized steel	M6	ISO 4032
130-1	Set screw		EN 1.4301 (AISI 304)	M5x8	ISO 4026
130-2	Screw for coupling guard		A2-70	M5x6	UNI 7687
131-1	Pin for shaft		Carbon Steel	Ø4x32	ISO 2338
135-1	Washer (tie rod)		EN 1.4301 (AISI 304)	Ø10.5x21x2	ISO 7089
135-6	Washer (aluminium coupling)	up to 4.0 kW	Carbon Steel	Ø6	
137-1	Impeller spacer		EN 1.4301 (AISI 304)		
140	Coupling	up to 4.0 kW	Die cast Aluminium EN AB-AISI11Cu2 (Fe)		
162	Motor bracket		Cast iron EN-GJL-250		
212	Priming plug		EN 1.4301 (AISI 304)	G 3/8	
212-1	Drainage plug		EN 1.4301 (AISI 304)	G 3/8	
212-2	Venting plug		EN 1.4404 (AISI 316L)		
219	Counter flange	flange type: N	Galvanized steel		
		flange type: F	Cast Iron EN-GJL-250		
245	Coupling guard		EN 1.4301 (AISI 304)		
273-1	Washer (drainage plug)		EN 1.4301 (AISI 304)		

EBARA Pumps Europe S.p.A. reserves the right to make changes without prior notice.

QUANTITY FOR MODEL EVMSG3

Pump Type	N°																											
	4	5-1	5-2	5-3	5-4	6	7	21	31	32-1	43-2	43-3	43-5	43-7	44-1	46	47	48	52-1	75	75-1	107	111	111-3	111-4	111-5	115-1	115-4	115-5
EVMSG3 2/0.37	1	1	/	1	1	1	1	2	1	1	1	1	/	/	1	2	1	1	1	1	4	2	1	1	1	1	2	1	1
EVMSG3 3/0.37	1	1	1	1	1	1	1	3	1	1	3	1	/	/	1	2	1	1	1	1	4	3	1	1	1	1	2	1	1
EVMSG3 4/0.37	1	1	2	1	1	1	1	4	1	1	5	1	/	/	1	2	1	1	1	1	4	4	1	1	1	1	2	1	1
EVMSG3 5/0.55	1	1	3	1	1	1	1	5	1	1	7	1	1	/	1	2	1	1	1	1	4	5	1	1	1	1	2	1	1
EVMSG3 6/0.55	1	1	4	1	1	1	1	6	1	1	9	1	/	/	1	2	1	1	1	1	4	6	1	1	1	1	2	1	1
EVMSG3 7/0.75	1	1	5	1	1	1	1	7	1	1	11	1	/	/	1	2	1	1	1	1	4	7	1	1	1	1	2	1	1
EVMSG3 8/0.75	1	1	6	1	1	1	1	8	1	1	13	1	/	/	1	2	1	1	1	1	4	8	1	1	1	1	2	1	1
EVMSG3 9/1.1	1	1	7	1	1	1	1	9	1	1	15	1	1	/	1	2	1	1	1	1	4	9	1	1	1	1	2	1	1
EVMSG3 10/1.1	1	1	8	1	1	1	1	10	1	1	17	1	/	/	1	2	1	1	1	1	4	10	1	1	1	1	2	1	1
EVMSG3 11/1.1	1	1	9	1	1	1	1	11	1	1	19	1	/	/	1	2	1	1	1	1	4	11	1	1	1	1	2	1	1
EVMSG3 12/1.1	1	1	10	1	1	1	1	12	1	1	21	1	/	/	1	2	1	1	1	1	4	12	1	1	1	1	2	1	1
EVMSG3 13/1.5	1	1	10	2	1	1	1	13	1	1	20	2	1	1	2	2	1	1	2	1	4	13	1	1	1	1	2	1	1
EVMSG3 14/1.5	1	1	11	2	1	1	1	14	1	1	22	2	/	1	2	2	1	1	2	1	4	14	1	1	1	1	2	1	1
EVMSG3 15/1.5	1	1	12	2	1	1	1	15	1	1	24	2	/	1	2	2	1	1	2	1	4	15	1	1	1	1	2	1	1
EVMSG3 16/1.5	1	1	13	2	1	1	1	16	1	1	26	2	/	1	2	2	1	1	2	1	4	16	1	1	1	1	2	1	1
EVMSG3 17/2.2	1	1	14	2	1	1	1	17	1	1	28	2	1	1	2	2	1	1	2	1	4	17	1	1	1	1	2	1	1
EVMSG3 19/2.2	1	1	16	2	1	1	1	19	1	1	32	2	/	1	2	2	1	1	2	1	4	19	1	1	1	1	2	1	1
EVMSG3 21/2.2	1	1	18	2	1	1	1	21	1	1	36	2	1	1	2	2	1	1	2	1	4	21	1	1	1	1	2	1	1
EVMSG3 23/2.2	1	1	20	2	1	1	1	23	1	1	40	2	/	1	2	2	1	1	2	1	4	23	1	1	1	1	2	1	1
EVMSG3 24/2.2	1	1	21	2	1	1	1	24	1	1	42	2	/	1	2	2	1	1	2	1	4	24	1	1	1	1	2	1	1
EVMSG3 25/3.0	1	1	22	2	1	1	1	25	1	1	44	2	/	1	2	2	1	1	2	1	4	25	1	1	1	1	2	1	1
EVMSG3 27/3.0	1	1	24	2	1	1	1	27	1	1	48	2	/	1	2	2	1	1	2	1	4	27	1	1	1	1	2	1	1
EVMSG3 29/3.0	1	1	26	2	1	1	1	29	1	1	52	2	/	1	2	2	1	1	2	1	4	29	1	1	1	1	2	1	1
EVMSG3 31/3.0	1	1	28	2	1	1	1	31	1	1	56	2	/	1	2	2	1	1	2	1	4	31	1	1	1	1	2	1	1
EVMSG3 33/3.0	1	1	30	2	1	1	1	33	1	1	60	2	/	1	2	2	1	1	2	1	4	33	1	1	1	1	2	1	1

Pump Type	N°																						
	117*	120-1	120-3	120-6	120-11*	120-13	128-1	128-6	130-1	130-2	131-1	135-1	135-6	137-1	140	162	212	212-1	212-2	219*	245	273-1
EVMSG3 2/0.37	2	4	4	4	4	4	4	4	3	4	1	4	4	1	2	1	1	4	1	2	2	4
EVMSG3 3/0.37	2	4	4	4	4	4	4	4	3	4	1	4	4	1	2	1	1	4	1	2	2	4
EVMSG3 4/0.37	2	4	4	4	4	4	4	4	3	4	1	4	4	1	2	1	1	4	1	2	2	4
EVMSG3 5/0.55	2	4	4	4	4	4	4	4	3	4	1	4	4	1	2	1	1	4	1	2	2	4
EVMSG3 6/0.55	2	4	4	4	4	4	4	4	3	4	1	4	4	1	2	1	1	4	1	2	2	4
EVMSG3 7/0.75	2	4	4	4	4	4	4	4	3	4	1	4	4	1	2	1	1	4	1	2	2	4
EVMSG3 8/0.75	2	4	4	4	4	4	4	4	3	4	1	4	4	1	2	1	1	4	1	2	2	4
EVMSG3 9/1.1	2	4	4	4	4	4	4	4	3	4	1	4	4	1	2	1	1	4	1	2	2	4
EVMSG3 10/1.1	2	4	4	4	4	4	4	4	3	4	1	4	4	1	2	1	1	4	1	2	2	4
EVMSG3 11/1.1	2	4	4	4	4	4	4	4	3	4	1	4	4	1	2	1	1	4	1	2	2	4
EVMSG3 12/1.1	2	4	4	4	4	4	4	4	3	4	1	4	4	1	2	1	1	4	1	2	2	4
EVMSG3 13/1.5	2	4	4	4	4	4	4	4	3	4	1	4	4	1	2	1	1	4	1	2	2	4
EVMSG3 14/1.5	2	4	4	4	4	4	4	4	3	4	1	4	4	1	2	1	1	4	1	2	2	4
EVMSG3 15/1.5	2	4	4	4	4	4	4	4	3	4	1	4	4	1	2	1	1	4	1	2	2	4
EVMSG3 16/1.5	2	4	4	4	4	4	4	4	3	4	1	4	4	1	2	1	1	4	1	2	2	4
EVMSG3 17/2.2	2	4	4	4	4	4	4	4	3	4	1	4	4	1	2	1	1	4	1	2	2	4
EVMSG3 19/2.2	2	4	4	4	4	4	4	4	3	4	1	4	4	1	2	1	1	4	1	2	2	4
EVMSG3 21/2.2	2	4	4	4	4	4	4	4	3	4	1	4	4	1	2	1	1	4	1	2	2	4
EVMSG3 23/2.2	/	4	4	4	/	4	4	4	3	4	1	4	4	1	2	1	1	4	1	/	2	4
EVMSG3 24/2.2	/	4	4	4	/	4	4	4	3	4	1	4	4	1	2	1	1	4	1	/	2	4
EVMSG3 25/3.0	/	4	4	4	/	4	4	4	3	4	1	4	4	1	2	1	1	4	1	/	2	4
EVMSG3 27/3.0	/	4	4	4	/	4	4	4	3	4	1	4	4	1	2	1	1	4	1	/	2	4
EVMSG3 29/3.0	/	4	4	4	/	4	4	4	3	4	1	4	4	1	2	1	1	4	1	/	2	4
EVMSG3 31/3.0	/	4	4	4	/	4	4	4	3	4	1	4	4	1	2	1	1	4	1	/	2	4
EVMSG3 33/3.0	/	4	4	4	/	4	4	4	3	4	1	4	4	1	2	1	1	4	1	/	2	4

* only for Oval flange (N)

EBARA Pumps Europe S.p.A. reserves the right to make changes without prior notice.

PERFORMANCE CURVE
EVMS(L)5

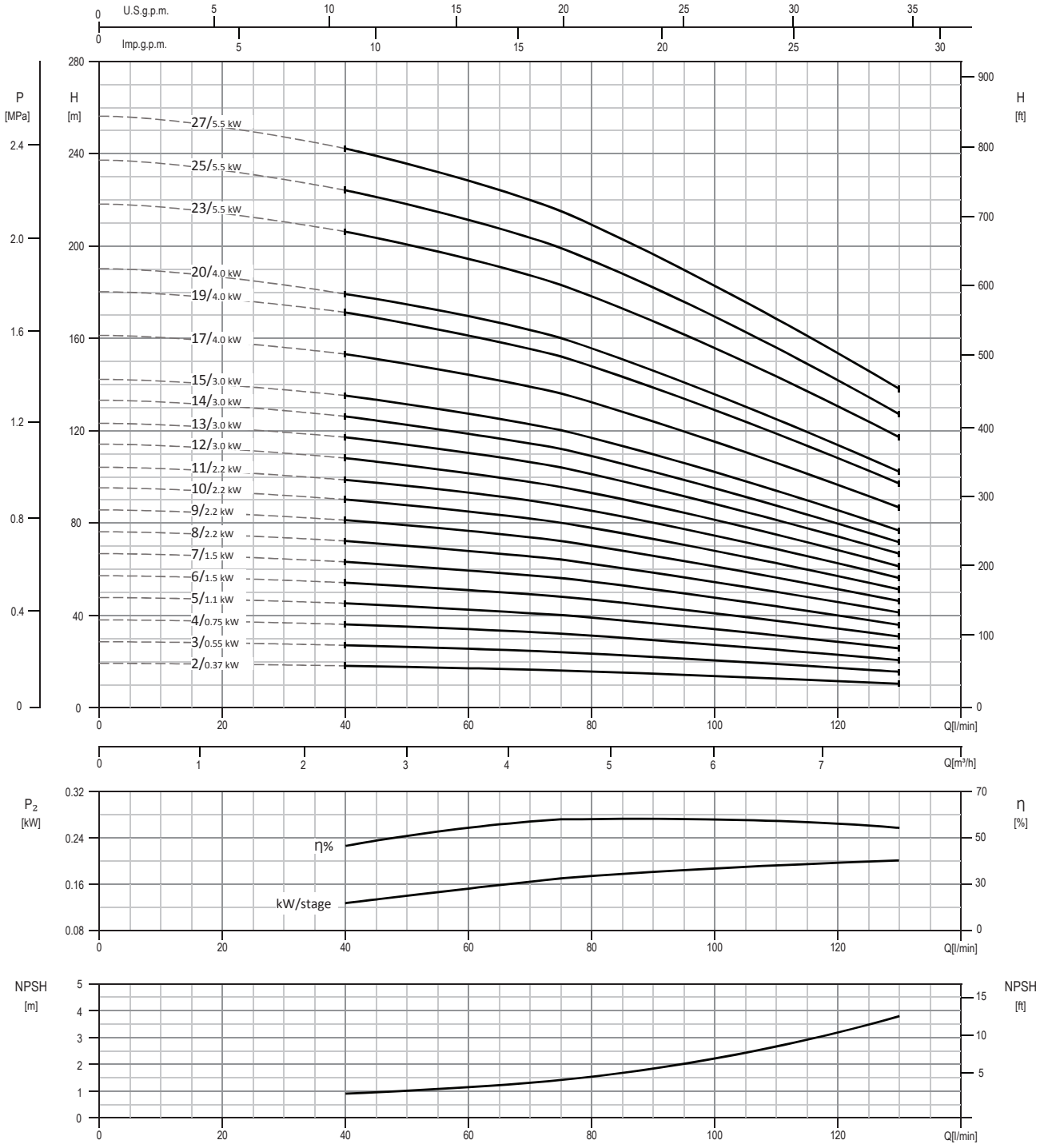

Test standard: ISO 9906:2012 - Grade 3B

EBARA Pumps Europe S.p.A. reserves the right to make changes without prior notice.

TECHNICAL DATA
EVMS(L)5

Dimensional sketch

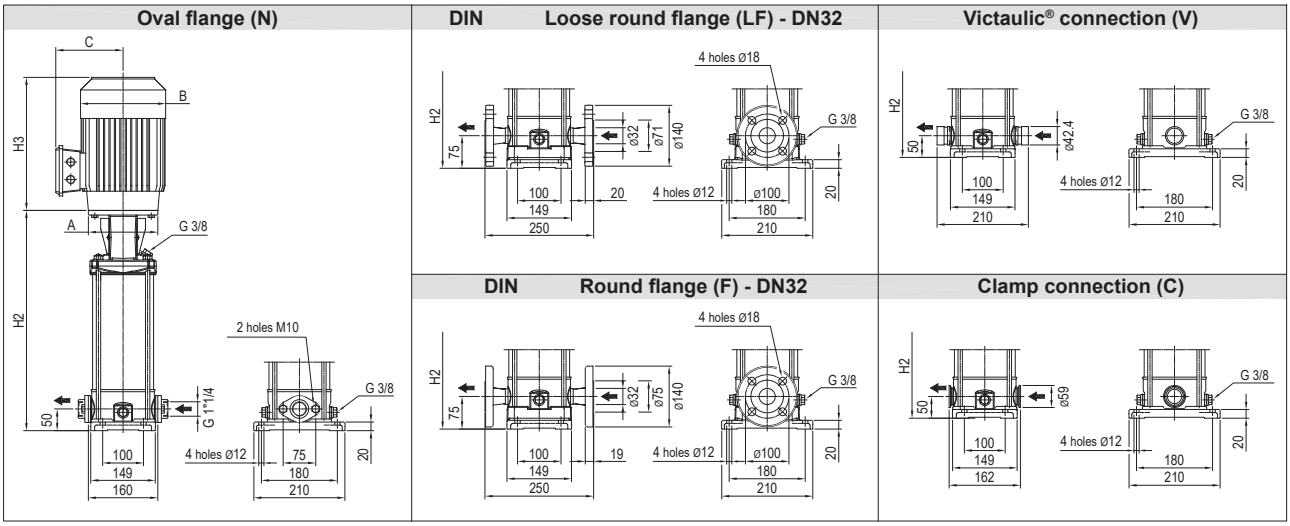

Dimensions [mm] and Weights [Kg]

Pump Type	Pmax [MPa]	Motor kW	Size	A Ø	1~ B	1~ C	3 ~ B	3 ~ C	Oval flange (N) H2	Oval flange (N) H2+H3 1 ~	Oval flange (N) H2+H3 3 ~	Oval flange (N) Weight Pump	Oval flange (N) Weight Pump + Motor 1 ~	Oval flange (N) Weight Pump + Motor 3 ~	Loose round flange (LF) Round flange (F) H2	Loose round flange (LF) Round flange (F) H2+H3 1 ~	Loose round flange (LF) Round flange (F) H2+H3 3 ~	Loose round flange (LF) Round flange (F) Weight Pump	Loose round flange (LF) Round flange (F) Weight Pump + Motor 1 ~	Loose round flange (LF) Round flange (F) Weight Pump + Motor 3 ~	Victaulic® connection (V) Clamp connection (C) H2	Victaulic® connection (V) Clamp connection (C) H2+H3 1 ~	Victaulic® connection (V) Clamp connection (C) H2+H3 3 ~	Victaulic® connection (V) Clamp connection (C) Weight Pump	Victaulic® connection (V) Clamp connection (C) Weight Pump + Motor 1 ~	Victaulic® connection (V) Clamp connection (C) Weight Pump + Motor 3 ~
EVMS(L)5 2/0.37	1.6	0.37	71	105	141	119	141	119	264	466	466	9.8	16.3	16.3	289	491	491	11	17.5	17.5	264	466	466	9.9	16.4	16.4
EVMS(L)5 3/0.55	1.6	0.55	71	105	141	119	141	119	292	494	494	10.3	17.3	17.3	317	519	519	11.5	18.5	18.5	292	494	494	10.4	17.4	17.4
EVMS(L)5 4/0.75	1.6	0.75	80	120	160	142	141	102	330	559	563	11.3	21.3	19.8	355	584	588	12.5	22.5	21.0	330	559	563	11.4	21.4	19.9
EVMS(L)5 5/1.1	1.6	1.1	80	120	160	142	141	102	358	587	602	11.8	22.8	21.8	383	612	627	13	24.0	23.0	358	587	602	11.9	22.9	21.9
EVMS(L)5 6/1.5	1.6	1.5	90	140	172	140	160	119	396	674	687	12.7	30.5	26.2	421	699	712	13.7	31.5	27.2	396	674	687	12.6	30.4	26.1
EVMS(L)5 7/1.5	1.6	1.5	90	140	172	140	160	119	424	702	715	12.8	30.6	26.3	449	727	740	14.1	31.9	27.6	424	702	715	13	30.8	26.5
EVMS(L)5 8/2.2	1.6	2.2	90	140	172	140	160	119	452	730	743	13.4	32.9	28.4	477	755	768	14.6	34.1	29.6	452	730	743	13.5	33.0	28.5
EVMS(L)5 9/2.2	1.6	2.2	90	140	172	140	160	119	480	758	771	13.9	33.4	28.9	505	783	796	15.2	34.7	30.2	480	758	771	14.1	33.6	29.1
EVMS(L)5 10/2.2	1.6	2.2	90	140	172	140	160	119	508	786	799	14.4	33.9	29.4	533	811	824	15.6	35.1	30.6	508	786	799	14.5	34.0	29.5
EVMS(L)5 11/2.2	1.6	2.2	90	140	172	140	160	119	536	814	827	15.2	34.7	30.2	561	839	852	16.5	36.0	31.5	536	814	827	15.4	34.9	30.4
EVMS(L)5 12/3.0	1.6	3.0	100	160	-	-	176	123	574	-	916	16.7	-	38.7	599	-	941	17.7	-	39.7	574	-	916	16.6	-	38.6
EVMS(L)5 13/3.0	1.6	3.0	100	160	-	-	176	123	602	-	944	17	-	39.0	627	-	969	18.3	-	40.3	602	-	944	17.2	-	39.2
EVMS(L)5 14/3.0	1.6	3.0	100	160	-	-	176	123	630	-	972	17.6	-	39.6	655	-	997	18.8	-	40.8	630	-	972	17.7	-	39.7
EVMS(L)5 15/3.0	1.6	3.0	100	160	-	-	176	123	658	-	1000	18.6	-	40.6	683	-	1025	19.9	-	41.9	658	-	1000	18.8	-	40.8
EVMS(L)5 17/4.0	1.6	4.0	112	160	-	-	193	138	714	-	1078	19.3	-	47.8	739	-	1103	20.6	-	49.1	714	-	1078	19.5	-	48.0
EVMS(L)5 19/4.0	2.5	4.0	112	160	-	-	193	138	-	-	-	-	-	-	795	-	1159	21.7	-	50.2	770	-	1134	20.6	-	49.1
EVMS(L)5 20/4.0	2.5	4.0	112	160	-	-	193	138	-	-	-	-	-	-	823	-	1187	23.9	-	52.4	798	-	1162	22.8	-	51.3
EVMS(L)5 23/5.5	2.5	5.5	132	300	-	-	220	152	-	-	-	-	-	-	1001	-	1400	30.6	-	69.6	976	-	1375	29.5	-	68.5
EVMS(L)5 25/5.5	2.5	5.5	132	300	-	-	220	152	-	-	-	-	-	-	1057	-	1456	31.6	-	70.6	1032	-	1431	30.5	-	69.5
EVMS(L)5 27/5.5	2.5	5.5	132	300	-	-	220	152	-	-	-	-	-	-	1113	-	1512	33.1	-	72.1	1088	-	1487	32	-	71.0

1.6 MPa=16 bar; 2.5 MPa=25 bar
- not available model

EBARA

EBARA Pumps Europe

EBARA Pumps Europe S.p.A. reserves the right to make changes without prior notice.

SECTIONAL VIEW
EVMS(L)5

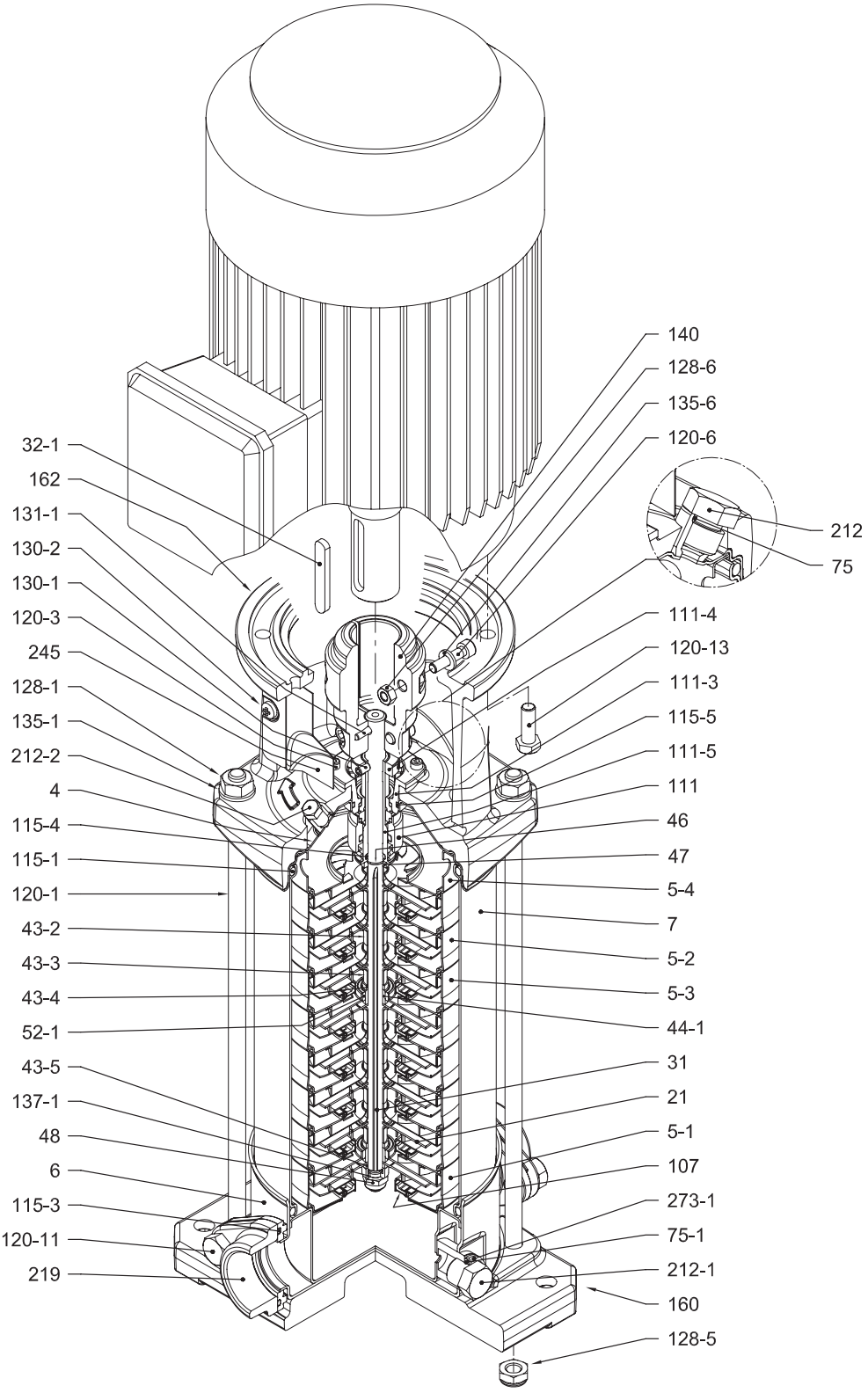

with Oval flange (N)

EBARA Pumps Europe S.p.A. reserves the right to make changes without prior notice.

PIPE CONNECTION
EVMS(L)5

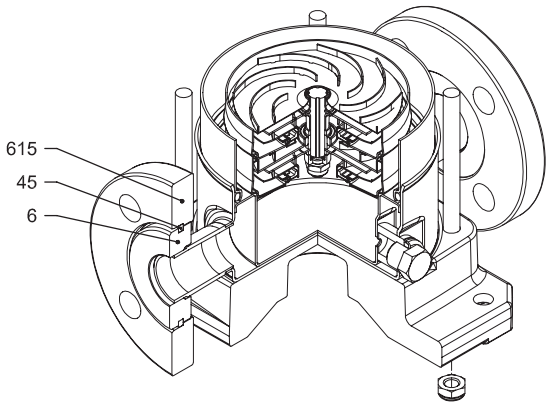

with Loose round flange (LF)

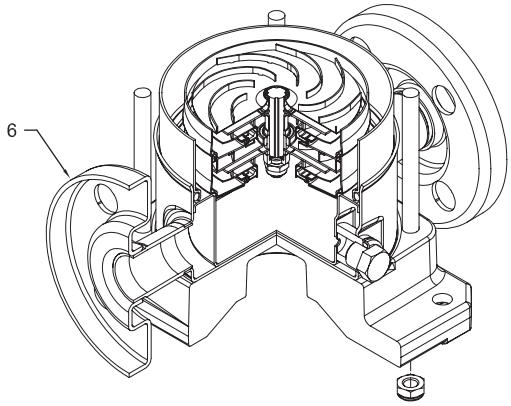

with Round flange (F)

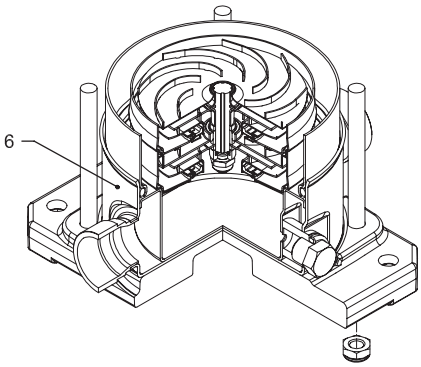

with Victaulic® connection (V)

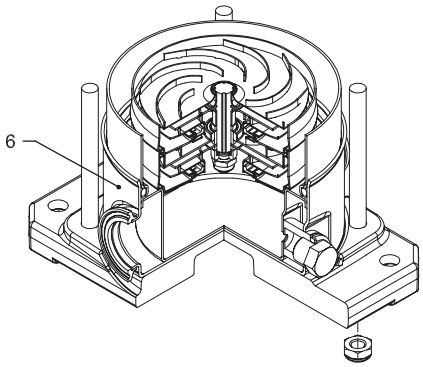

with Clamp connection (C)

EBARA Pumps Europe S.p.A. reserves the right to make changes without prior notice.

SECTIONAL TABLE
EVMS(L)5

N°	PART NAME		MATERIAL		DIMENSIONS	STANDARD
			EVMS	EVMSL		
4	Casing cover		EN 1.4301 (AISI 304)	EN 1.4404 (AISI 316L)		
5-1	Suction casing		EN 1.4301 (AISI 304)	EN 1.4404 (AISI 316L)		
5-2	Intermediate casing		EN 1.4301 (AISI 304)	EN 1.4404 (AISI 316L)		
5-3	Intermediate casing with bearing		EN 1.4301 (AISI 304)	EN 1.4404 (AISI 316L)		
5-4	Discharge casing		EN 1.4301 (AISI 304)	EN 1.4404 (AISI 316L)		
6	Bottom casing		EN 1.4301 (AISI 304)	EN 1.4404 (AISI 316L)		
7	Outer casing		EN 1.4301 (AISI 304)	EN 1.4404 (AISI 316L)		
21	Impeller		EN 1.4301 (AISI 304)	EN 1.4404 (AISI 316L)		
31	Shaft		EN 1.4301 (AISI 304) - EN 1.4462 (AISI 329A)	EN 1.4404 (AISI 316L) - EN 1.4462 (AISI 329A)		
32-1	Adjuster Key		EN 1.4301 (AISI 304)			
43-2	Shaft sleeve (intermediate)		EN 1.4301 (AISI 304)	EN 1.4404 (AISI 316L)		
43-3	Shaft sleeve (bearing)		EN 1.4301 (AISI 304)	EN 1.4404 (AISI 316L)		
43-4	Shaft sleeve (adjustment)		EN 1.4404 (AISI 316L)			
43-5	Shaft sleeve (last stage)		EN 1.4301 (AISI 304)	EN 1.4404 (AISI 316L)		
44-1	Shaft sleeve bearing		Tungsten carbide			
45	Flange holder		EN 1.4301 (AISI 304)			
46	Ring (mechanical seal)		EN 1.4404 (AISI 316L)			
47	Ring holder		EN 1.4301 (AISI 304)	EN 1.4404 (AISI 316L)		
48	Impeller nut		EN 1.4301 (AISI 304) with inox insert	EN 1.4401 (AISI 316) with inox insert	M8	
52-1	Sleeve bearing		Tungsten carbide			
75	O-Ring (priming plug)		EPDM / FPM		Ø12.37x2.62	OR 3050
75-1	O-Ring (drainage plug)		EPDM / FPM			
107	Liner ring		EN 1.4301 (AISI 304) + PPS	EN 1.4404 (AISI 316L) + PPS		
111	Mechanical seal		see pages 6-7			
111-3	Mechanical seal seat		EN 1.4308 (ASTM CF8)	EN 1.4408 (ASTM CF8M)		
111-4	Seal holder		EN 1.4301 (AISI 304)			
111-5	Mechanical seal cartridge sleeve		EN 1.4301 (AISI 304)	EN 1.4404 (AISI 316L)		
115-1	O-Ring (outer casing)		EPDM / FPM		Ø129.54x5.34	OR 6945
115-3	O-Ring		EPDM / FPM			
115-4	O-Ring (cartridge sleeve)		EPDM / FPM		Ø11.91x2.62	OR 4093
115-5	O-Ring (seal flange)		EPDM / FPM		Ø32.99x2.62	OR 4175
120-1	Tie-rod		EN 1.4057 (AISI 431)		M10	
120-3	Screw (seal flange)		A2-70		M4x10	ISO 4762
120-6	Screw (pump coupling)	up to 4.0 kW	Galvanized steel		M6x25	ISO 4762
		above 5.5 kW			M8x20	ISO 4762
120-11	Screw (counterflange)		A2-70			
120-13	Screw for motor	MEC 71-80	Galvanized steel 8.8 strength class ISO 898/1		M6x20	ISO 4017
		MEC 90-100-112			M8x20	ISO 4017
		MEC 132			M12x40	ISO 4017
128-1	Nut (tie rod)		A2-70		M10	ISO 4032
128-3	Nut (motor)	MEC 132	Galvanized steel		M12	ISO 4032
128-5	Nut (tie rod)		A2-70		M10	UNI 7474
128-6	Nut (aluminium coupling)	MEC 71-80-90-100-112	Galvanized steel		M6	ISO 4032
130-1	Set screw		EN 1.4301 (AISI 304)		M5x8	ISO 4026
130-2	Screw for coupling guard		A2-70		M5x6	UNI 7687
131-1	Pin for shaft		Carbon Steel		Ø4x32	ISO 2338
135-1	Washer (tie rod)		EN 1.4301 (AISI 304)		Ø10.5x21x2	ISO 7089
135-6	Washer (aluminium coupling)	up to 4.0 kW	Carbon Steel		Ø6	
137-1	Impeller spacer		EN 1.4301 (AISI 304)	EN 1.4404 (AISI 316L)		
140	Coupling	up to 4.0 kW	Die cast Aluminium EN AB-AISI11Cu2 (Fe)			
		above 5.5 kW	Cast Iron			
160	Base		Die cast Aluminium EN AB-AISI11Cu2 (Fe)			
162	Motor bracket		Cast iron EN-GJL-250			
212	Priming plug		EN 1.4301 (AISI 304)	EN 1.4404 (AISI 316L)	G 3/8	
212-1	Drainage plug		EN 1.4301 (AISI 304)	EN 1.4404 (AISI 316L)	G 3/8	
212-2	Venting plug		EN 1.4404 (AISI 316L)			
219	Counter flange	flange type: N	EN 1.4308 (ASTM CF8)	EN 1.4408 (ASTM CF8M)		
		flange type: LF-F-V-C	EN 1.4301 (AISI 304)	EN 1.4404 (AISI 316L)		
245	Coupling guard		EN 1.4301 (AISI 304)			
273-1	Washer (drainage plug)		EN 1.4301 (AISI 304)	EN 1.4404 (AISI 316L)		
615	Flange		Nodular Cast Iron			

EBARA Pumps Europe S.p.A. reserves the right to make changes without prior notice.

QUANTITY FOR MODEL EVMS(L)5

Pump Type	N°																													
	4	5-1	5-2	5-3	5-4	6	7	21	31***	32-1	43-2	43-3	43-4	43-5	44-1	45**	46	47	48	52-1	75	75-1	107	111	111-3	111-4	111-5	115-1	115-3*	115-4	115-5
EVMS(L)5 2/0.37	1	1	/	1	1	1	1	2	1	1	1	1	1	/	1	4	2	1	1	1	1	2	2	1	1	1	1	2	2	1	1
EVMS(L)5 3/0.55	1	1	1	1	1	1	1	3	1	1	3	1	1	1	1	4	2	1	1	1	1	2	3	1	1	1	1	2	2	1	1
EVMS(L)5 4/0.75	1	1	2	1	1	1	1	4	1	1	5	1	1	/	1	4	2	1	1	1	1	2	4	1	1	1	1	2	2	1	1
EVMS(L)5 5/1.1	1	1	3	1	1	1	1	5	1	1	7	1	1	/	1	4	2	1	1	1	1	2	5	1	1	1	1	2	2	1	1
EVMS(L)5 6/1.5	1	1	4	1	1	1	1	6	1	1	9	1	1	1	1	4	2	1	1	1	1	2	6	1	1	1	1	2	2	1	1
EVMS(L)5 7/1.5	1	1	5	1	1	1	1	7	1	1	11	1	1	/	1	4	2	1	1	1	1	2	7	1	1	1	1	2	2	1	1
EVMS(L)5 8/2.2	1	1	6	1	1	1	1	8	1	1	13	1	1	/	1	4	2	1	1	1	1	2	8	1	1	1	1	2	2	1	1
EVMS(L)5 9/2.2	1	1	7	1	1	1	1	9	1	1	15	1	1	1	1	4	2	1	1	1	1	2	9	1	1	1	1	2	2	1	1
EVMS(L)5 10/2.2	1	1	8	1	1	1	1	10	1	1	17	1	1	/	1	4	2	1	1	1	1	2	10	1	1	1	1	2	2	1	1
EVMS(L)5 11/2.2	1	1	8	2	1	1	1	11	1	1	17	2	2	/	2	4	2	1	1	2	1	2	11	1	1	1	1	2	2	1	1
EVMS(L)5 12/3.0	1	1	9	2	1	1	1	12	1	1	19	2	2	1	2	4	2	1	1	2	1	2	12	1	1	1	1	2	2	1	1
EVMS(L)5 13/3.0	1	1	10	2	1	1	1	13	1	1	21	2	2	/	2	4	2	1	1	2	1	2	13	1	1	1	1	2	2	1	1
EVMS(L)5 14/3.0	1	1	11	2	1	1	1	14	1	1	23	2	2	/	2	4	2	1	1	2	1	2	14	1	1	1	1	2	2	1	1
EVMS(L)5 15/3.0	1	1	12	2	1	1	1	15	1	1	25	2	2	1	2	4	2	1	1	2	1	2	15	1	1	1	1	2	2	1	1
EVMS(L)5 17/4.0	1	1	14	2	1	1	1	17	1	1	29	2	2	/	2	4	2	1	1	2	1	2	17	1	1	1	1	2	2	1	1
EVMS(L)5 19/4.0	1	1	16	2	1	1	1	19	1	1	33	2	2	/	2	4	2	1	1	2	1	2	19	1	1	1	1	2	/	1	1
EVMS(L)5 20/4.0	1	1	17	2	1	1	1	20	1	1	35	2	2	/	2	4	2	1	1	2	1	2	20	1	1	1	1	2	/	1	1
EVMS(L)5 23/5.5	1	1	20	2	1	1	1	23	1	1	41	2	2	/	2	4	2	1	1	2	1	2	23	1	1	1	1	2	/	1	1
EVMS(L)5 25/5.5	1	1	22	2	1	1	1	25	1	1	45	2	2	/	2	4	2	1	1	2	1	2	25	1	1	1	1	2	/	1	1
EVMS(L)5 27/5.5	1	1	23	3	1	1	1	27	1	1	47	3	3	/	3	4	2	1	1	3	1	2	27	1	1	1	1	2	/	1	1

Pump Type	N°																								
	120-1	120-3	120-6	120-11*	120-13	128-1	128-3	128-5	128-6	130-1	130-2	131-1	135-1	135-6	137-1	140	160	162	212	212-1	212-2	219*	245	273-1	615**
EVMS(L)5 2/0.37	4	4	4	4	4	4	/	4	4	3	4	1	4	4	1	2	1	1	1	2	1	2	2	2	2
EVMS(L)5 3/0.55	4	4	4	4	4	4	/	4	4	3	4	1	4	4	1	2	1	1	1	2	1	2	2	2	2
EVMS(L)5 4/0.75	4	4	4	4	4	4	/	4	4	3	4	1	4	4	1	2	1	1	1	2	1	2	2	2	2
EVMS(L)5 5/1.1	4	4	4	4	4	4	/	4	4	3	4	1	4	4	1	2	1	1	1	2	1	2	2	2	2
EVMS(L)5 6/1.5	4	4	4	4	4	4	/	4	4	3	4	1	4	4	1	2	1	1	1	2	1	2	2	2	2
EVMS(L)5 7/1.5	4	4	4	4	4	4	/	4	4	3	4	1	4	4	1	2	1	1	1	2	1	2	2	2	2
EVMS(L)5 8/2.2	4	4	4	4	4	4	/	4	4	3	4	1	4	4	1	2	1	1	1	2	1	2	2	2	2
EVMS(L)5 9/2.2	4	4	4	4	4	4	/	4	4	3	4	1	4	4	1	2	1	1	1	2	1	2	2	2	2
EVMS(L)5 10/2.2	4	4	4	4	4	4	/	4	4	3	4	1	4	4	1	2	1	1	1	2	1	2	2	2	2
EVMS(L)5 11/2.2	4	4	4	4	4	4	/	4	4	3	4	1	4	4	1	2	1	1	1	2	1	2	2	2	2
EVMS(L)5 12/3.0	4	4	4	4	4	4	/	4	4	3	4	1	4	4	1	2	1	1	1	2	1	2	2	2	2
EVMS(L)5 13/3.0	4	4	4	4	4	4	/	4	4	3	4	1	4	4	1	2	1	1	1	2	1	2	2	2	2
EVMS(L)5 14/3.0	4	4	4	4	4	4	/	4	4	3	4	1	4	4	1	2	1	1	1	2	1	2	2	2	2
EVMS(L)5 15/3.0	4	4	4	4	4	4	/	4	4	3	4	1	4	4	1	2	1	1	1	2	1	2	2	2	2
EVMS(L)5 17/4.0	4	4	4	4	4	4	/	4	4	3	4	1	4	4	1	2	1	1	1	2	1	2	2	2	2
EVMS(L)5 19/4.0	4	4	4	/	4	4	/	4	4	3	4	1	4	4	1	2	1	1	1	2	1	/	2	2	2
EVMS(L)5 20/4.0	4	4	4	/	4	4	/	4	4	3	4	1	4	4	1	2	1	1	1	2	1	/	2	2	2
EVMS(L)5 23/5.5	4	4	4	/	4	4	4	4	/	3	4	1	4	/	1	2	1	1	1	2	1	/	2	2	2
EVMS(L)5 25/5.5	4	4	4	/	4	4	4	4	/	3	4	1	4	/	1	2	1	1	1	2	1	/	2	2	2
EVMS(L)5 27/5.5	4	4	4	/	4	4	4	4	/	3	4	1	4	/	1	2	1	1	1	2	1	/	2	2	2

* only for Oval flange (N)

** only for Loose round flange (LF)

** ☐ shaft in EN 1.4462 (AISI 329A)

128-3: only for motor above 5.5 kW (see drawing pag.54)

EBARA Pumps Europe S.p.A. reserves the right to make changes without prior notice.

PERFORMANCE CURVE
EVMSG5

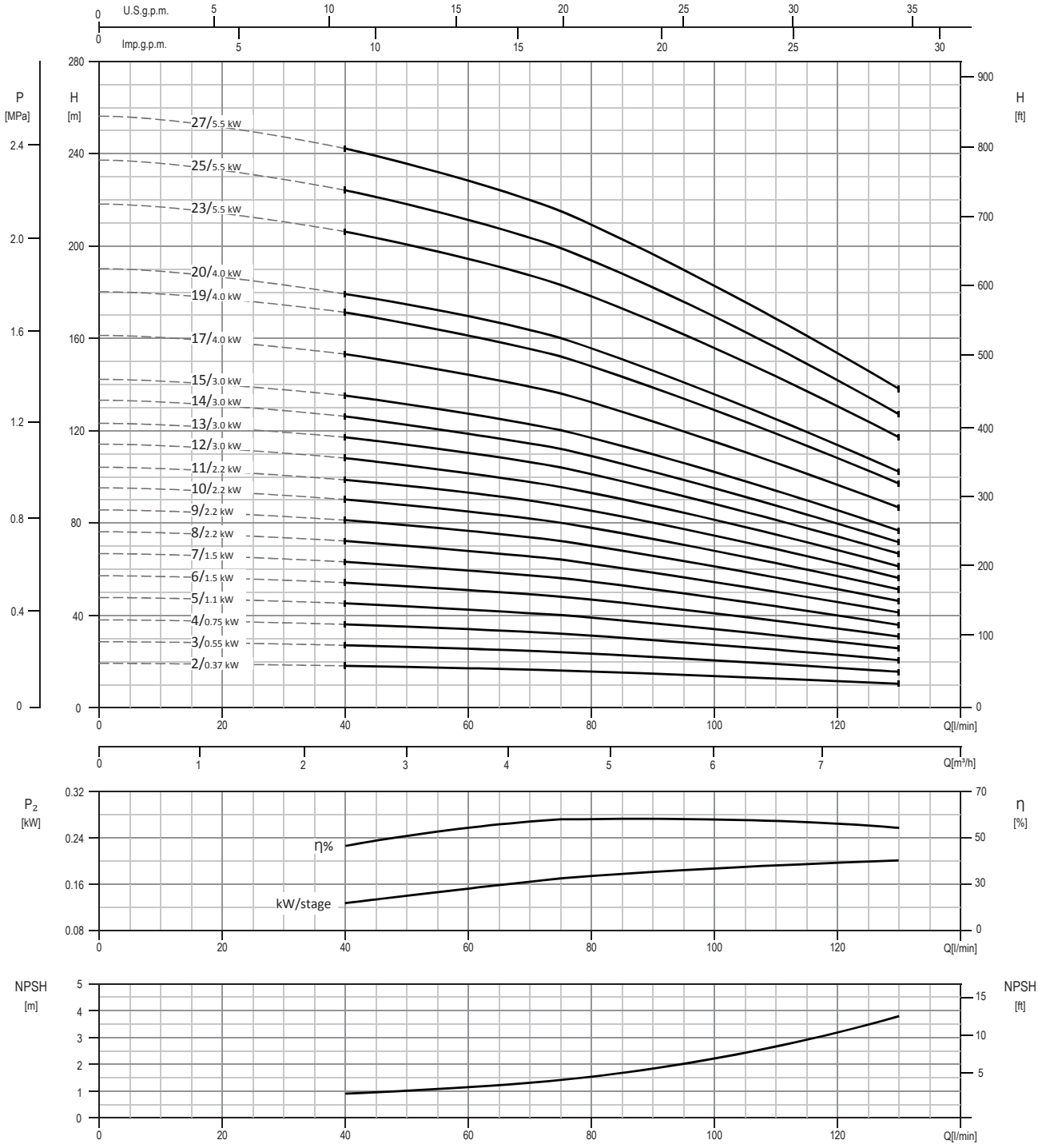

Test standard: ISO 9906:2012 - Grade 3B

EBARA Pumps Europe S.p.A. reserves the right to make changes without prior notice.

TECHNICAL DATA
EVMSG5

Dimensional sketch

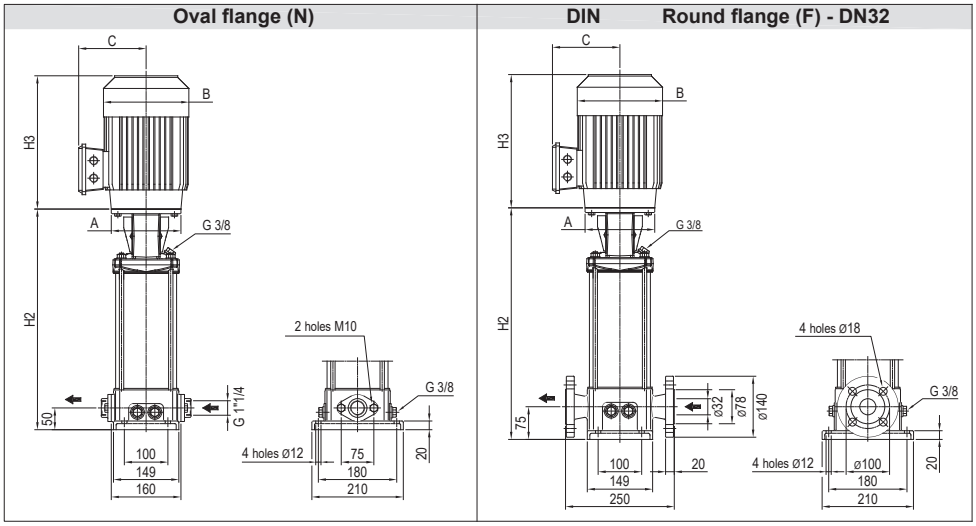

Dimensions [mm] and Weights [Kg]

Pump Type	Pmax [MPa]	Motor kW	Size	A Ø	1~ B	1~ C	3 ~ B	3 ~ C	Oval flange (N) H2	H2+H3 1 ~	H2+H3 3 ~	Weight Pump	Weight Pump + Motor 1 ~	Weight Pump + Motor 3 ~	Round flange (F) H2	H2+H3 1 ~	H2+H3 3 ~	Weight Pump	Weight Pump + Motor 1 ~	Weight Pump + Motor 3 ~
EVMSG5 2/0.37	1.6	0.37	71	105	141	119	141	119	264	466	466	13	19.5	19.5	289	491	491	17.5	24.0	24.0
EVMSG5 3/0.55	1.6	0.55	71	105	141	119	141	119	292	494	494	13.5	20.5	20.5	317	519	519	18	25.0	25.0
EVMSG5 4/0.75	1.6	0.75	80	120	160	142	141	102	330	559	563	14.5	24.5	23.0	355	584	588	19	29.0	27.5
EVMSG5 5/1.1	1.6	1.1	80	120	160	142	141	102	358	587	602	15	26.0	25.0	383	612	627	19.5	30.5	29.5
EVMSG5 6/1.5	1.6	1.5	90	140	172	140	160	119	396	674	687	15.5	33.3	29.0	421	699	712	20.1	37.9	33.6
EVMSG5 7/1.5	1.6	1.5	90	140	172	140	160	119	424	702	715	16	33.8	29.5	449	727	740	20.5	38.3	34.0
EVMSG5 8/2.2	1.6	2.2	90	140	172	140	160	119	452	730	743	16.6	36.1	31.6	477	755	768	21.1	40.6	36.1
EVMSG5 9/2.2	1.6	2.2	90	140	172	140	160	119	480	758	771	17.1	36.6	32.1	505	783	796	21.6	41.1	36.6
EVMSG5 10/2.2	1.6	2.2	90	140	172	140	160	119	508	786	799	17.6	37.1	32.6	533	811	824	22.1	41.6	37.1
EVMSG5 11/2.2	1.6	2.2	90	140	172	140	160	119	536	814	827	18.4	37.9	33.4	561	839	852	22.9	42.4	37.9
EVMSG5 12/3.0	1.6	3.0	100	160	-	-	176	123	574	-	916	19.6	-	41.6	599	-	941	24.1	-	46.1
EVMSG5 13/3.0	1.6	3.0	100	160	-	-	176	123	602	-	944	20.2	-	42.2	627	-	969	24.7	-	46.7
EVMSG5 14/3.0	1.6	3.0	100	160	-	-	176	123	630	-	972	20.8	-	42.8	655	-	997	25.3	-	47.3
EVMSG5 15/3.0	1.6	3.0	100	160	-	-	176	123	658	-	1000	21.8	-	43.8	683	-	1025	26.3	-	48.3
EVMSG5 17/4.0	1.6	3.0	112	160	-	-	193	138	714	-	1078	22.5	-	51.0	739	-	1103	27	-	55.5
EVMSG5 19/4.0	2.5	4.0	112	160	-	-	193	138	-	-	-	-	-	-	795	-	1159	28.1	-	56.6
EVMSG5 20/4.0	2.5	4.0	112	160	-	-	193	138	-	-	-	-	-	-	823	-	1187	30.3	-	58.8
EVMSG5 23/5.5	2.5	4.0	132	300	-	-	220	152	-	-	-	-	-	-	1001	-	1400	37	-	76.0
EVMSG5 25/5.5	2.5	5.5	132	300	-	-	220	152	-	-	-	-	-	-	1057	-	1456	38	-	77.0
EVMSG5 27/5.5	2.5	5.5	132	300	-	-	220	152	-	-	-	-	-	-	1113	-	1512	39.6	-	78.6

1.6 MPa=16 bar; 2.5 MPa=25 bar
- not available model

EBARA Pumps Europe S.p.A. reserves the right to make changes without prior notice.

SECTIONAL VIEW
EVMSG5

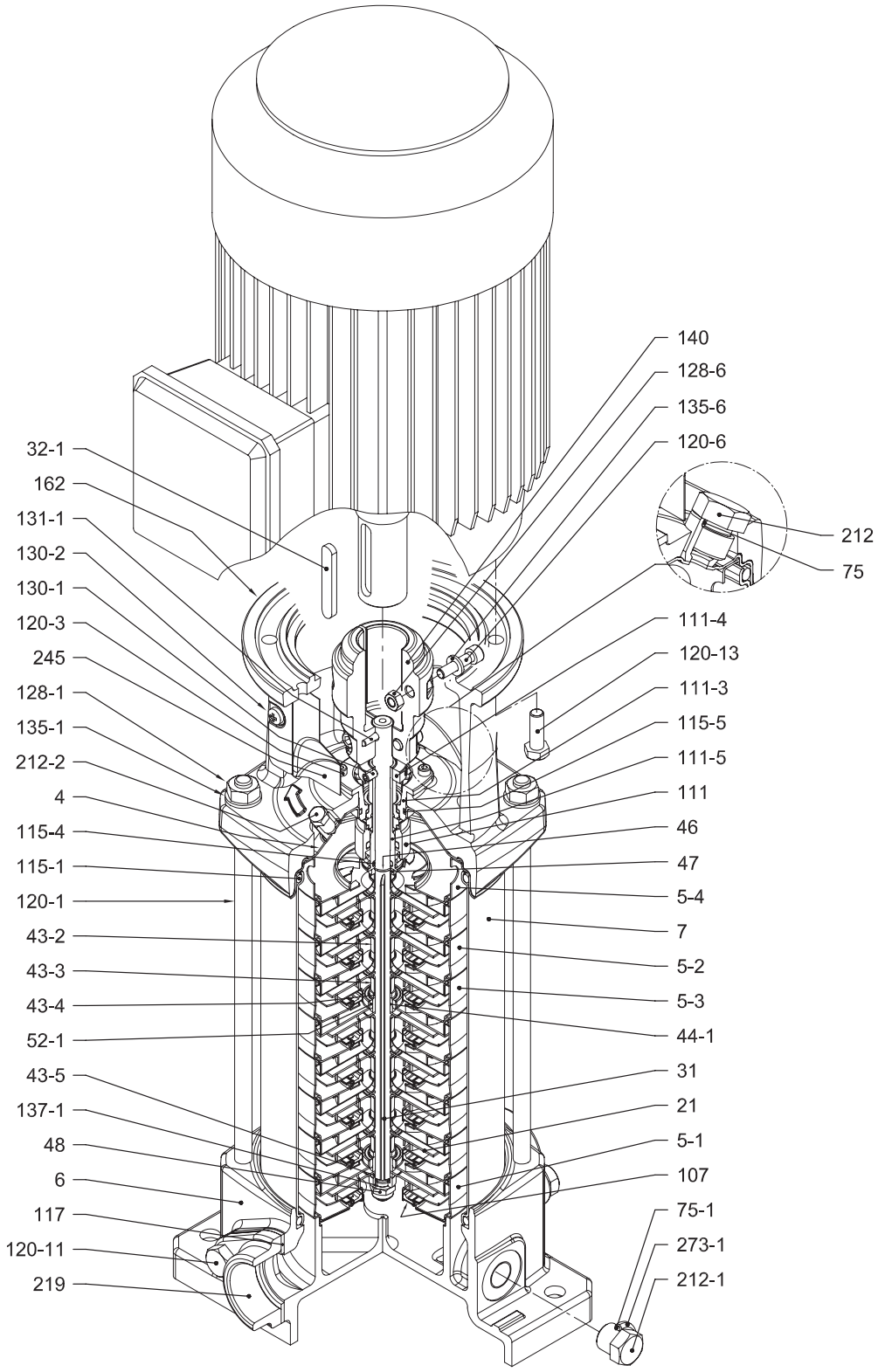

with Oval flange (N)

EBARA Pumps Europe S.p.A. reserves the right to make changes without prior notice.

PIPE CONNECTION
EVMSG5

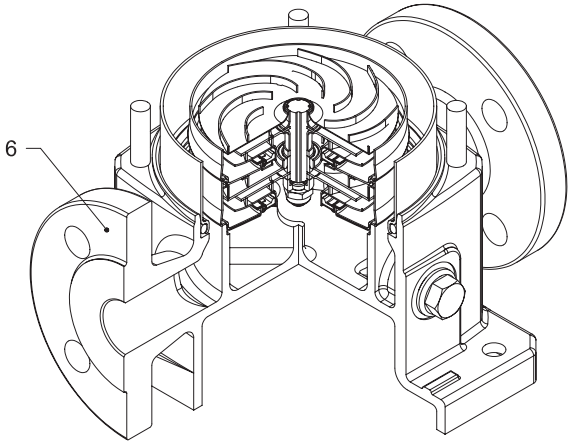

with Round flange (F)

EBARA Pumps Europe S.p.A. reserves the right to make changes without prior notice.

SECTIONAL TABLE
EVMSG5

N°	PART NAME		MATERIAL EVMSG	DIMENSIONS	STANDARD
4	Casing cover		EN 1.4301 (AISI 304)		
5-1	Suction casing		EN 1.4301 (AISI 304)		
5-2	Intermediate casing		EN 1.4301 (AISI 304)		
5-3	Intermediate casing with bearing		EN 1.4301 (AISI 304)		
5-4	Discharge casing		EN 1.4301 (AISI 304)		
6	Bottom casing		Cast Iron EN-GJL-250		
7	Outer casing		EN 1.4301 (AISI 304)		
21	Impeller		EN 1.4301 (AISI 304)		
31	Shaft		EN 1.4301 (AISI 304) - EN 1.4462 (AISI 329A)		
32-1	Adjuster key		EN 1.4301 (AISI 304)		
43-2	Shaft sleeve (intermediate)		EN 1.4301 (AISI 304)		
43-3	Shaft sleeve (bearing)		EN 1.4301 (AISI 304)		
43-4	Shaft sleeve (adjustment)		EN 1.4404 (AISI 316L)		
43-5	Shaft sleeve (last stage)		EN 1.4301 (AISI 304)		
44-1	Shaft sleeve bearing		Tungsten carbide		
46	Ring (mechanical seal)		EN 1.4404 (AISI 316L)		
47	Ring holder		EN 1.4404 (AISI 316L)		
48	Impeller nut		EN 1.4301 (AISI 304) with inox insert	M8	
52-1	Sleeve bearing		Tungsten carbide		
75	O-Ring (priming plug)		EPDM / FPM	Ø12.37x2.62	OR 3050
75-1	O-Ring (drainage plug)		EPDM / FPM		
107	Liner ring		EN 1.4301 (AISI 304) + PPS		
111	Mechanical seal		see pages 6-7		
111-3	Mechanical seal seat		EN 1.4308 (ASTM CF8)		
111-4	Seal holder		EN 1.4301 (AISI 304)		
111-5	Mechanical seal cartridge sleeve		EN 1.4301 (AISI 304)		
115-1	O-Ring (outer casing)		EPDM / FPM	Ø129.54x5.34	OR 6945
115-4	O-Ring (cartridge sleeve)		EPDM / FPM	Ø11.91x2.62	OR 4093
115-5	O-Ring (seal flange)		EPDM / FPM	Ø32.99x2.62	OR 4175
117	Flange gasket		EPDM / FPM		
120-1	Tie-rod		EN 1.4057 (AISI 431)	M10	
120-3	Screw (seal flange)		A2-70	M4x10	ISO 4762
120-6	Screw (pump coupling)	up to 4.0 kW	Galvanized steel	M6x25	ISO 4762
		above 5.5 kW		M8x20	ISO 4762
120-11	Screw (counterflange)		A2-70		
120-13	Screw for motor	MEC 71-80	Galvanized steel 8.8 strength class ISO 898/1	M6x20	ISO 4017
		MEC 90-100-112		M8x20	ISO 4017
		MEC 132		M12x40	ISO 4017
128-1	Nut (tie rod)		A2-70	M10	ISO 4032
128-3	Nut (motor)	MEC 132	Galvanized steel	M12	ISO 4032
128-6	Nut (aluminium coupling)	MEC 71-80-90-100-112	Galvanized steel	M6	ISO 4032
130-1	Set screw		EN 1.4301 (AISI 304)	M5x8	ISO 4026
130-2	Screw for coupling guard		A2-70	M5x6	UNI 7687
131-1	Pin for shaft		Carbon Steel	Ø4x32	ISO 2338
135-1	Washer (tie rod)		EN 1.4301 (AISI 304)	Ø10.5x21x2	ISO 7089
135-6	Washer (aluminium coupling)	up to 4.0 kW	Carbon Steel	Ø6	
137-1	Impeller spacer		EN 1.4301 (AISI 304)		
140	Coupling	up to 4.0 kW	Die cast Aluminium EN AB-AISI11Cu2 (Fe)		
		above 5.5 kW	Cast Iron		
162	Motor bracket		Cast iron EN-GJL-250		
212	Priming plug		EN 1.4301 (AISI 304)	G 3/8	
212-1	Drainage plug		EN 1.4301 (AISI 304)	G 3/8	
212-2	Venting plug		EN 1.4404 (AISI 316L)		
219	Counter flange	flange type: N	Galvanized steel		
		flange type: F	Cast Iron EN-GJL-250		
245	Coupling guard		EN 1.4301 (AISI 304)		
273-1	Washer (drainage plug)		EN 1.4301 (AISI 304)		

EBARA Pumps Europe S.p.A. reserves the right to make changes without prior notice.

QUANTITY FOR MODEL EVMSG5

Pump Type	N°																											
	4	5-1	5-2	5-3	5-4	6	7	21	31***	32-1	43-2	43-3	43-4	43-5	44-1	46	47	48	52-1	75	75-1	107	111	111-3	111-4	111-5	115-1	115-4	115-5
EVMSG5 2/0.37	1	1	/	1	1	1	1	2	1	1	1	1	1	/	1	2	1	1	1	1	4	2	1	1	1	1	2	1	1
EVMSG5 3/0.55	1	1	1	1	1	1	1	3	1	1	3	1	1	1	1	2	1	1	1	1	4	3	1	1	1	1	2	1	1
EVMSG5 4/0.75	1	1	2	1	1	1	1	4	1	1	5	1	1	/	1	2	1	1	1	1	4	4	1	1	1	1	2	1	1
EVMSG5 5/1.1	1	1	3	1	1	1	1	5	1	1	7	1	1	/	1	2	1	1	1	1	4	5	1	1	1	1	2	1	1
EVMSG5 6/1.5	1	1	4	1	1	1	1	6	1	1	9	1	1	1	1	2	1	1	1	1	4	6	1	1	1	1	2	1	1
EVMSG5 7/1.5	1	1	5	1	1	1	1	7	1	1	11	1	1	/	1	2	1	1	1	1	4	7	1	1	1	1	2	1	1
EVMSG5 8/2.2	1	1	6	1	1	1	1	8	1	1	13	1	1	/	1	2	1	1	1	1	4	8	1	1	1	1	2	1	1
EVMSG5 9/2.2	1	1	7	1	1	1	1	9	1	1	15	1	1	1	1	2	1	1	1	1	4	9	1	1	1	1	2	1	1
EVMSG5 10/2.2	1	1	8	1	1	1	1	10	1	1	17	1	1	/	1	2	1	1	1	1	4	10	1	1	1	1	2	1	1
EVMSG5 11/2.2	1	1	8	2	1	1	1	11	1	1	17	2	2	/	2	2	1	1	2	1	4	11	1	1	1	1	2	1	1
EVMSG5 12/3.0	1	1	9	2	1	1	1	12	1	1	19	2	2	1	2	2	1	1	2	1	4	12	1	1	1	1	2	1	1
EVMSG5 13/3.0	1	1	10	2	1	1	1	13	1	1	21	2	2	/	2	2	1	1	2	1	4	13	1	1	1	1	2	1	1
EVMSG5 14/3.0	1	1	11	2	1	1	1	14	1	1	23	2	2	/	2	2	1	1	2	1	4	14	1	1	1	1	2	1	1
EVMSG5 15/3.0	1	1	12	2	1	1	1	15	1	1	25	2	2	1	2	2	1	1	2	1	4	15	1	1	1	1	2	1	1
EVMSG5 17/4.0	1	1	14	2	1	1	1	17	1	1	29	2	2	/	2	2	1	1	2	1	4	17	1	1	1	1	2	1	1
EVMSG5 19/4.0	1	1	16	2	1	1	1	19	1	1	33	2	2	/	2	2	1	1	2	1	4	19	1	1	1	1	2	1	1
EVMSG5 20/4.0	1	1	17	2	1	1	1	20	1	1	35	2	2	/	2	2	1	1	2	1	4	20	1	1	1	1	2	1	1
EVMSG5 23/5.5	1	1	20	2	1	1	1	23	1	1	41	2	2	/	2	2	1	1	2	1	4	23	1	1	1	1	2	1	1
EVMSG5 25/5.5	1	1	22	2	1	1	1	25	1	1	45	2	2	/	2	2	1	1	2	1	4	25	1	1	1	1	2	1	1
EVMSG5 27/5.5	1	1	23	3	1	1	1	27	1	1	47	3	3	/	3	2	1	1	3	1	4	27	1	1	1	1	2	1	1

Pump Type	N°																							
	117*	120-1	120-3	120-6	120-11*	120-13	128-1	128-3	128-6	130-1	130-2	131-1	135-1	135-6	137-1	140	162	212	212-1	212-2	219*	245	273-1
EVMSG5 2/0.37	2	4	4	4	4	4	4	/	4	3	4	1	4	4	1	2	1	1	4	1	2	2	4
EVMSG5 3/0.55	2	4	4	4	4	4	4	/	4	3	4	1	4	4	1	2	1	1	4	1	2	2	4
EVMSG5 4/0.75	2	4	4	4	4	4	4	/	4	3	4	1	4	4	1	2	1	1	4	1	2	2	4
EVMSG5 5/1.1	2	4	4	4	4	4	4	/	4	3	4	1	4	4	1	2	1	1	4	1	2	2	4
EVMSG5 6/1.5	2	4	4	4	4	4	4	/	4	3	4	1	4	4	1	2	1	1	4	1	2	2	4
EVMSG5 7/1.5	2	4	4	4	4	4	4	/	4	3	4	1	4	4	1	2	1	1	4	1	2	2	4
EVMSG5 8/2.2	2	4	4	4	4	4	4	/	4	3	4	1	4	4	1	2	1	1	4	1	2	2	4
EVMSG5 9/2.2	2	4	4	4	4	4	4	/	4	3	4	1	4	4	1	2	1	1	4	1	2	2	4
EVMSG5 10/2.2	2	4	4	4	4	4	4	/	4	3	4	1	4	4	1	2	1	1	4	1	2	2	4
EVMSG5 11/2.2	2	4	4	4	4	4	4	/	4	3	4	1	4	4	1	2	1	1	4	1	2	2	4
EVMSG5 12/3.0	2	4	4	4	4	4	4	/	4	3	4	1	4	4	1	2	1	1	4	1	2	2	4
EVMSG5 13/3.0	2	4	4	4	4	4	4	/	4	3	4	1	4	4	1	2	1	1	4	1	2	2	4
EVMSG5 14/3.0	2	4	4	4	4	4	4	/	4	3	4	1	4	4	1	2	1	1	4	1	2	2	4
EVMSG5 15/3.0	2	4	4	4	4	4	4	/	4	3	4	1	4	4	1	2	1	1	4	1	2	2	4
EVMSG5 17/4.0	2	4	4	4	4	4	4	/	4	3	4	1	4	4	1	2	1	1	4	1	2	2	4
EVMSG5 19/4.0	/	4	4	4	/	4	4	/	4	3	4	1	4	4	1	2	1	1	4	1	/	2	4
EVMSG5 20/4.0	/	4	4	4	/	4	4	/	4	3	4	1	4	4	1	2	1	1	4	1	/	2	4
EVMSG5 23/5.5	/	4	4	4	/	4	4	4	/	3	4	1	4	/	1	2	1	1	4	1	/	2	4
EVMSG5 25/5.5	/	4	4	4	/	4	4	4	/	3	4	1	4	/	1	2	1	1	4	1	/	2	4
EVMSG5 27/5.5	/	4	4	4	/	4	4	4	/	3	4	1	4	/	1	2	1	1	4	1	/	2	4

* only for Oval flange (N)

** ☐ shaft in EN 1.4462 (AISI 329A)

128-3: only for motor above 5.5 kW (see drawing pag.54)

EBARA Pumps Europe S.p.A. reserves the right to make changes without prior notice.

PERFORMANCE CURVE
EVMS(L)10

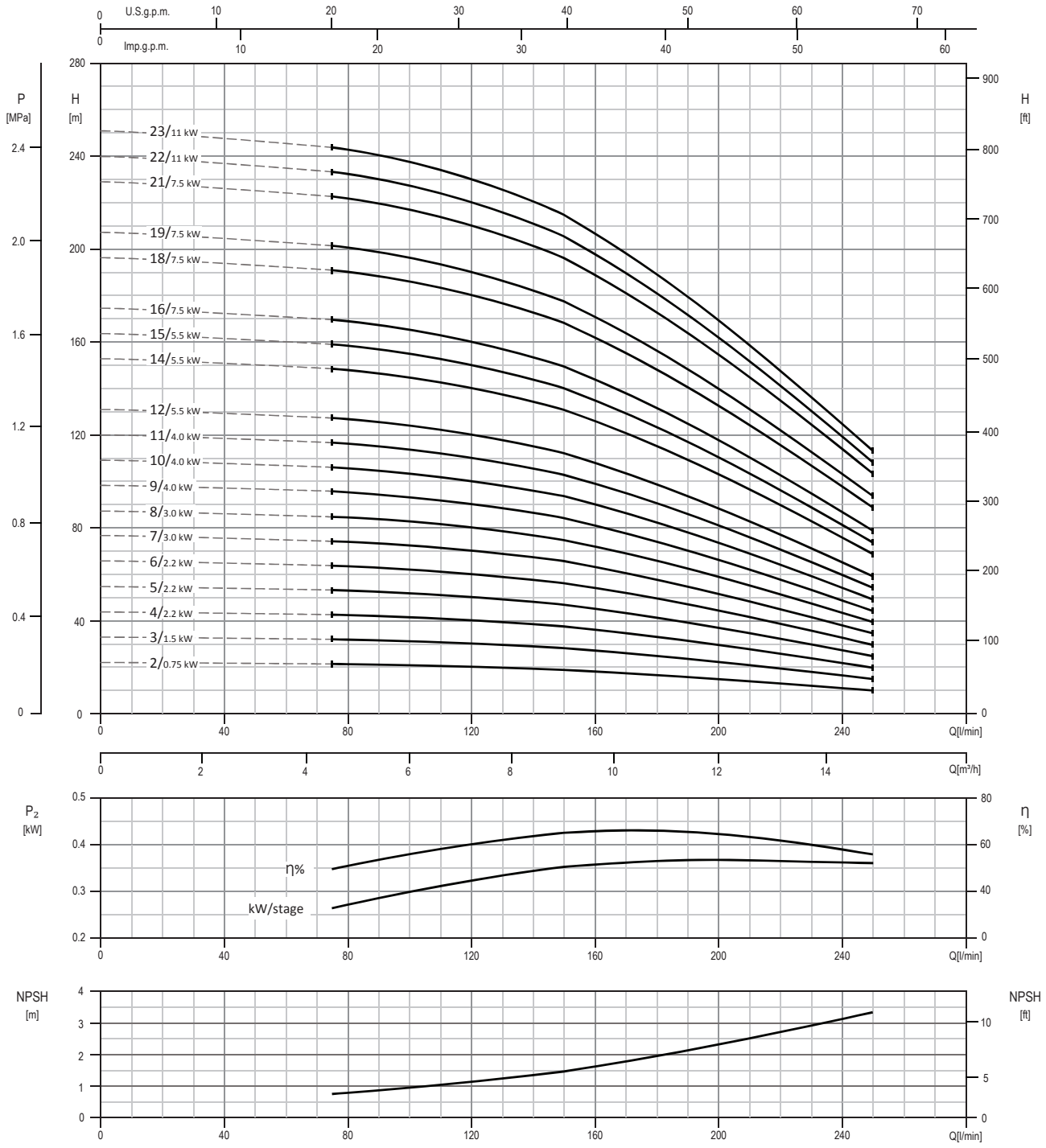

Test standard: ISO 9906:2012 - Grade 3B

EBARA Pumps Europe S.p.A. reserves the right to make changes without prior notice.

TECHNICAL DATA
EVMS(L)10

Dimensional sketch

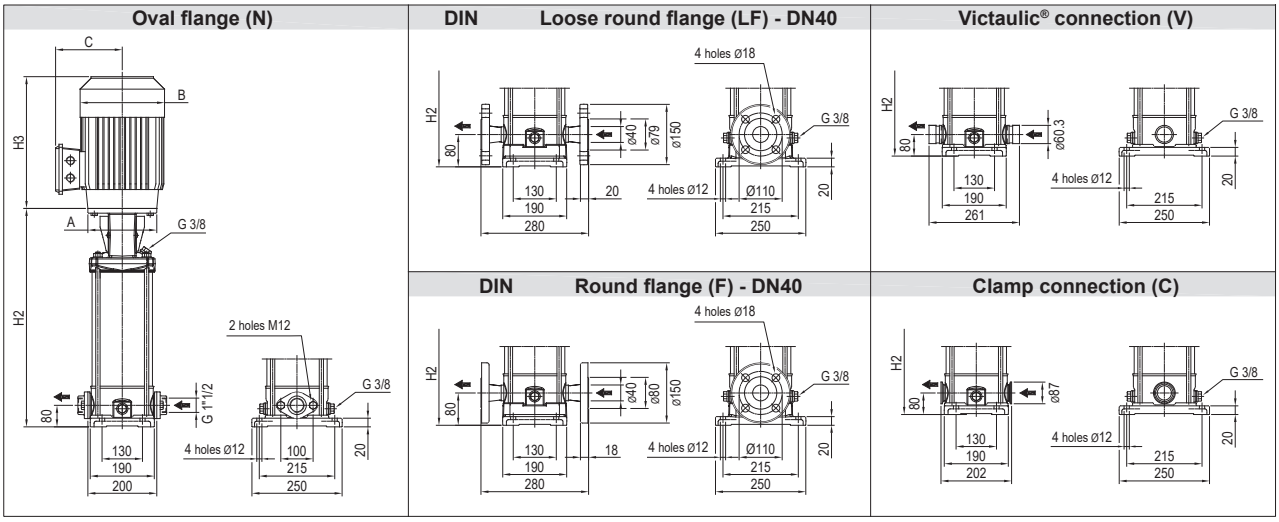

Dimensions [mm] and Weights [Kg]

Pump Type	Pmax [MPa]	Motor kW	Motor Size	Motor A Ø	Motor 1~ B	Motor 1~ C	Motor 3~ B	Motor 3~ C	Oval flange (N) H2	Oval flange (N) H2+H3 1~	Oval flange (N) H2+H3 3~	Oval flange (N) Weight Pump	Oval flange (N) Weight Pump + Motor 1~	Oval flange (N) Weight Pump + Motor 3~	Loose round flange (LF) Round flange (F) H2	Loose round flange (LF) Round flange (F) H2+H3 1~	Loose round flange (LF) Round flange (F) H2+H3 3~	Loose round flange (LF) Round flange (F) Weight Pump	Loose round flange (LF) Round flange (F) Weight Pump + Motor 1~	Loose round flange (LF) Round flange (F) Weight Pump + Motor 3~	Victaulic® connection (V) Clamp connection (C) H2	Victaulic® connection (V) Clamp connection (C) H2+H3 1~	Victaulic® connection (V) Clamp connection (C) H2+H3 3~	Victaulic® connection (V) Clamp connection (C) Weight Pump	Victaulic® connection (V) Clamp connection (C) Weight Pump + Motor 1~	Victaulic® connection (V) Clamp connection (C) Weight Pump + Motor 3~
EVMS(L)10 2/0.75	1.6	0.75	80	120	160	142	141	102	343	572	576	17.6	27.6	26.1	343	572	576	17.5	27.5	26.0	343	572	576	16.5	26.5	25.0
EVMS(L)10 3/1.5	1.6	1.5	90	140	172	140	160	119	383	661	674	18.5	36.3	32.0	383	661	674	18.5	36.3	32.0	383	661	674	17.4	35.2	30.9
EVMS(L)10 4/2.2	1.6	2.2	90	140	172	140	160	119	413	691	704	19.3	38.8	34.3	413	691	704	19.3	38.8	34.3	413	691	704	18.2	37.7	33.2
EVMS(L)10 5/2.2	1.6	2.2	90	140	172	140	160	119	443	721	734	20.2	39.7	35.2	443	721	734	20.1	39.6	35.1	443	721	734	19.1	38.6	34.1
EVMS(L)10 6/2.2	1.6	2.2	90	140	172	140	160	119	473	751	764	21	40.5	36.0	473	751	764	21	40.5	36.0	473	751	764	19.9	39.4	34.9
EVMS(L)10 7/3.0	1.6	3.0	100	160	-	-	176	123	513	-	855	22	-	44.0	513	-	855	21.9	-	43.9	513	-	855	20.9	-	42.9
EVMS(L)10 8/3.0	1.6	3.0	100	160	-	-	176	123	543	-	885	22.8	-	44.8	543	-	885	22.8	-	44.8	543	-	885	21.7	-	43.7
EVMS(L)10 9/4.0	1.6	4.0	112	160	-	-	193	138	573	-	937	23.7	-	52.2	573	-	937	23.6	-	52.1	573	-	937	22.6	-	51.1
EVMS(L)10 10/4.0	1.6	4.0	112	160	-	-	193	138	603	-	967	24.5	-	53.0	603	-	967	24.5	-	53.0	603	-	967	23.4	-	51.9
EVMS(L)10 11/4.0	1.6	4.0	112	160	-	-	193	138	633	-	997	26.1	-	54.6	633	-	997	26.1	-	54.6	633	-	997	25	-	53.5
EVMS(L)10 12/5.5	1.6	5.5	132	300	-	-	220	152	761	-	1160	35.9	-	74.9	761	-	1160	35.9	-	74.9	761	-	1160	34.8	-	73.8
EVMS(L)10 14/5.5	1.6	5.5	132	300	-	-	220	152	821	-	1220	37.8	-	76.8	821	-	1220	37.7	-	76.7	821	-	1220	36.7	-	75.7
EVMS(L)10 15/5.5	1.6	5.5	132	300	-	-	220	152	851	-	1250	38.7	-	77.7	851	-	1250	38.6	-	77.6	851	-	1250	37.6	-	76.6
EVMS(L)10 16/7.5	2.5	7.5	132	300	-	-	220	152	-	-	-	-	-	-	881	-	1300	39.6	-	85.6	881	-	1300	38.5	-	84.5
EVMS(L)10 18/7.5	2.5	7.5	132	300	-	-	220	152	-	-	-	-	-	-	941	-	1360	41.4	-	87.4	941	-	1360	40.3	-	86.3
EVMS(L)10 19/7.5	2.5	7.5	132	300	-	-	220	152	-	-	-	-	-	-	971	-	1390	42.3	-	88.3	971	-	1390	41.2	-	87.2
EVMS(L)10 21/7.5	2.5	7.5	132	300	-	-	220	152	-	-	-	-	-	-	1031	-	1450	44.1	-	90.1	1031	-	1450	43.1	-	89.1
EVMS(L)10 22/11	2.5	11	160	350	-	-	259	180	-	-	-	-	-	-	1091	-	1531	46.4	-	108.9	1091	-	1531	45.4	-	107.9
EVMS(L)10 23/11	2.5	11	160	350	-	-	259	180	-	-	-	-	-	-	1121	-	1561	53.1	-	115.6	1121	-	1561	52.1	-	114.6

1.6 MPa=16 bar; 2.5 MPa=25 bar
- not available model

EBARA Pumps Europe S.p.A. reserves the right to make changes without prior notice.

SECTIONAL VIEW
EVMS(L)10

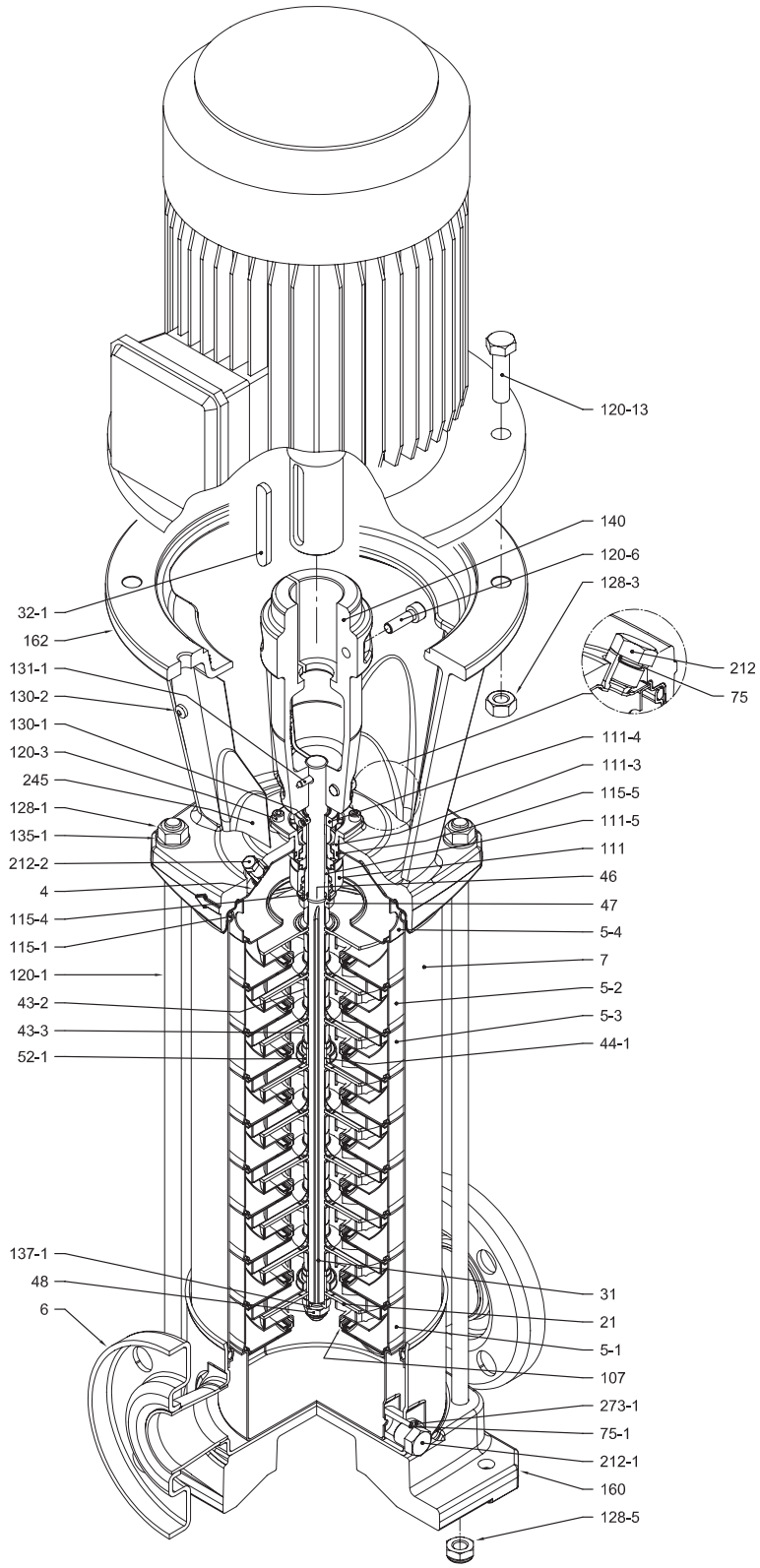

with Round flange (F)

EBARA Pumps Europe S.p.A. reserves the right to make changes without prior notice.

PIPE CONNECTION
EVMS(L)10

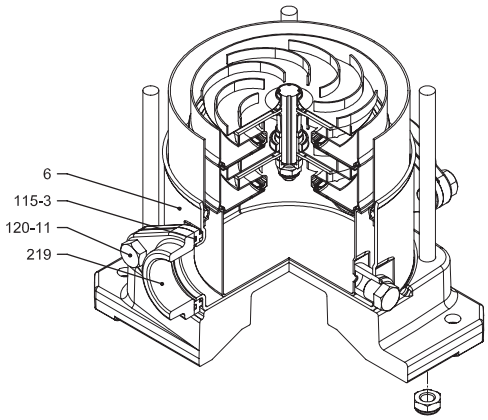

with Oval flange (N)

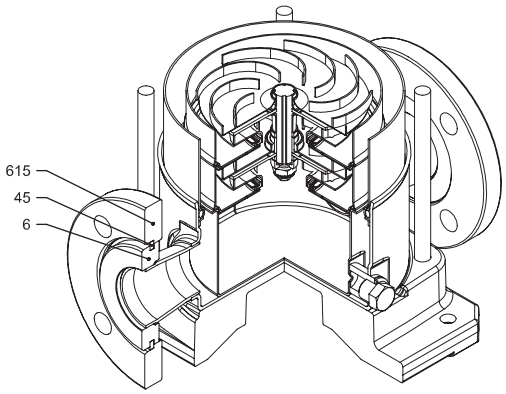

with Loose round flange (LF)

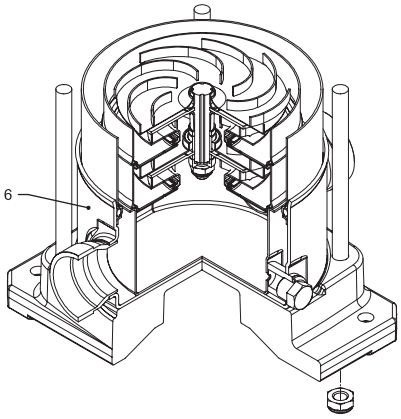

with Victaulic® connection (V)

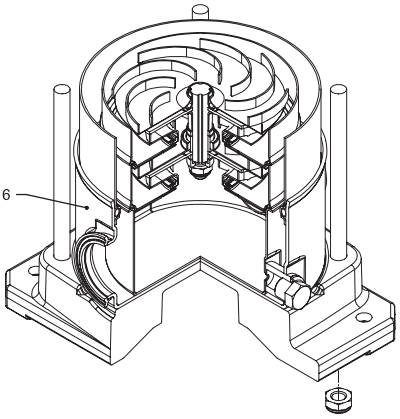

with Clamp connection (C)

EBARA Pumps Europe S.p.A. reserves the right to make changes without prior notice.

SECTIONAL TABLE
EVMS(L)10

N°	PART NAME		MATERIAL EVMS	MATERIAL EVMSL	DIMENSIONS	STANDARD
4	Casing cover		EN 1.4301 (AISI 304)	EN 1.4404 (AISI 316L)		
5-1	Suction casing		EN 1.4301 (AISI 304)	EN 1.4404 (AISI 316L)		
5-2	Intermediate casing		EN 1.4301 (AISI 304)	EN 1.4404 (AISI 316L)		
5-3	Intermediate casing with bearing		EN 1.4301 (AISI 304)	EN 1.4404 (AISI 316L)		
5-4	Discharge casing		EN 1.4301 (AISI 304)	EN 1.4404 (AISI 316L)		
6	Bottom casing		EN 1.4301 (AISI 304)	EN 1.4404 (AISI 316L)		
7	Outer casing		EN 1.4301 (AISI 304)	EN 1.4404 (AISI 316L)		
21	Impeller		EN 1.4301 (AISI 304)	EN 1.4404 (AISI 316L)		
31	Shaft		EN 1.4301 (AISI 304)	EN 1.4404 (AISI 316L)		
32-1	Adjuster key		EN 1.4301 (AISI 304)			
43-2	Shaft sleeve (intermediate)		EN 1.4301 (AISI 304)	EN 1.4404 (AISI 316L)		
43-3	Shaft sleeve (bearing)		EN 1.4301 (AISI 304)	EN 1.4404 (AISI 316L)		
44-1	Shaft sleeve bearing		Tungsten carbide			
45	Flange holder		EN 1.4301 (AISI 304)			
46	Ring (mechanical seal)		EN 1.4404 (AISI 316L)			
47	Ring holder		EN 1.4301 (AISI 304)	EN 1.4404 (AISI 316L)		
48	Impeller nut		EN 1.4301 (AISI 304) with inox insert	EN 1.4401 (AISI 316) with inox insert	M10	
52-1	Sleeve bearing		Tungsten carbide			
75	O-Ring (priming plug)		EPDM / FPM		Ø12.37x2.62	OR 3050
75-1	O-Ring (drainage plug)		EPDM / FPM			
107	Liner ring		EN 1.4301 (AISI 304) + PPS	EN 1.4404 (AISI 316L) + PPS		
111	Mechanical seal		see pages 6-7			
111-3	Mechanical seal seat		EN 1.4308 (ASTM CF8)	EN 1.4408 (ASTM CF8M)		
111-4	Seal holder		EN 1.4301 (AISI 304)			
111-5	Mechanical seal cartridge sleeve		EN 1.4301 (AISI 304)	EN 1.4404 (AISI 316L)		
115-1	O-Ring (outer casing)		EPDM / FPM		Ø164.46x5.34	OR 6945
115-3	O-Ring		EPDM / FPM			
115-4	O-Ring (cartridge sleeve)		EPDM / FPM		Ø15.88x2.62	OR 4093
115-5	O-Ring (seal flange)		EPDM / FPM		Ø37.77x2.62	OR 4175
120-1	Tie-rod		EN 1.4057 (AISI 431)		M12	
120-3	Screw		A2-70		M5x12	ISO 4762
120-6	Screw (pump coupling)	up to 4.0 kW	Galvanized steel		M6x25	ISO 4762
		from 5.5 kW to 7.5 kW			M8x20	ISO 4762
		above 11 kW			M10x30	ISO 4762
120-11	Screw (counterflange)		A2-70			
120-13	Screw for motor	MEC 80	Galvanized steel 8.8 strength class ISO 898/1		M6x20	ISO 4017
		MEC 90-100-112			M8x20	ISO 4017
		MEC 132			M12x40	UNI 5739
		MEC 160			M16x50	ISO 4017
128-1	Nut (tie rod)		A2-70		M12	ISO 4032
128-3	Nut (motor)	MEC 132	Galvanized steel		M12	ISO 4032
		MEC 160			M16	ISO 4032
128-5	Nut (tie rod)		A2-70		M12	UNI 7474
128-6	Nut (aluminium coupling)	MEC 71-80-90-100-112	Galvanized steel		M6	ISO 4032
130-1	Set screw		EN 1.4301 (AISI 304)		M5x8	ISO 4026
130-2	Screw for coupling guard		A2-70		M5x6	UNI 7687
131-1	Pin for shaft		Carbon Steel		Ø5x35	ISO 2338
135-1	Washer (tie rod)		EN 1.4301 (AISI 304)		Ø13x24x2.5	ISO 7089
135-6	Washer (aluminium coupling)	up to 4.0 kW	Carbon Steel		Ø6	
137-1	Impeller spacer		EN 1.4301 (AISI 304)	EN 1.4404 (AISI 316L)		
140	Coupling	up to 4.0 kW	Die cast Aluminium EN AB-AISI11 Cu2 (Fe)			
		above 5.5 kW	Cast Iron			
160	Base		Die cast Aluminium EN AB-AISI11 Cu2 (Fe)			
162	Motor bracket		Cast iron EN-GJL-250			
212	Priming plug		EN 1.4301 (AISI 304)	EN 1.4404 (AISI 316L)	G 3/8	
212-1	Drainage plug		EN 1.4301 (AISI 304)	EN 1.4404 (AISI 316L)	G 3/8	
212-2	Venting plug		EN 1.4404 (AISI 316L)			
219	Counter flange	flange type: N	EN 1.4308 (ASTM CF8)	EN 1.4408 (ASTM CF8M)		
		flange type: LF-F-V-C	EN 1.4301 (AISI 304)	EN 1.4404 (AISI 316L)		
245	Coupling guard		EN 1.4301 (AISI 304)			
273-1	Washer (drainage plug)		EN 1.4301 (AISI 304)	EN 1.4404 (AISI 316L)		
615	Flange		Nodular Cast Iron			

EBARA Pumps Europe S.p.A. reserves the right to make changes without prior notice.

QUANTITY FOR MODEL EVMS(L)10

Pump Type	N°																											
	4	5-1	5-2	5-3	5-4	6	7	21	31	32-1	43-2	43-3	44-1	45**	46	47	48	52-1	75	75-1	107	111	111-3	111-4	111-5	115-1	115-3*	115-4	115-5
EVMS(L)10 2/0.75	1	1	/	1	1	1	1	2	1	1	1	1	1	4	2	1	1	1	1	2	2	1	1	1	1	2	2	1	1
EVMS(L)10 3/1.5	1	1	1	1	1	1	1	3	1	1	3	1	1	4	2	1	1	1	1	2	3	1	1	1	1	2	2	1	1
EVMS(L)10 4/2.2	1	1	2	1	1	1	1	4	1	1	5	1	1	4	2	1	1	1	1	2	4	1	1	1	1	2	2	1	1
EVMS(L)10 5/2.2	1	1	3	1	1	1	1	5	1	1	7	1	1	4	2	1	1	1	1	2	5	1	1	1	1	2	2	1	1
EVMS(L)10 6/2.2	1	1	4	1	1	1	1	6	1	1	9	1	1	4	2	1	1	1	1	2	6	1	1	1	1	2	2	1	1
EVMS(L)10 7/3.0	1	1	5	1	1	1	1	7	1	1	11	1	1	4	2	1	1	1	1	2	7	1	1	1	1	2	2	1	1
EVMS(L)10 8/3.0	1	1	6	1	1	1	1	8	1	1	13	1	1	4	2	1	1	1	1	2	8	1	1	1	1	2	2	1	1
EVMS(L)10 9/4.0	1	1	7	1	1	1	1	9	1	1	15	1	1	4	2	1	1	1	1	2	9	1	1	1	1	2	2	1	1
EVMS(L)10 10/4.0	1	1	8	1	1	1	1	10	1	1	17	1	1	4	2	1	1	1	1	2	10	1	1	1	1	2	2	1	1
EVMS(L)10 11/4.0	1	1	9	1	1	1	1	11	1	1	19	1	1	4	2	1	1	1	1	2	11	1	1	1	1	2	2	1	1
EVMS(L)10 12/5.5	1	1	9	2	1	1	1	12	1	1	19	2	2	4	2	1	1	2	1	2	12	1	1	1	1	2	2	1	1
EVMS(L)10 14/5.5	1	1	11	2	1	1	1	14	1	1	23	2	2	4	2	1	1	2	1	2	14	1	1	1	1	2	2	1	1
EVMS(L)10 15/5.5	1	1	12	2	1	1	1	15	1	1	25	2	2	4	2	1	1	2	1	2	15	1	1	1	1	2	2	1	1
EVMS(L)10 16/7.5	1	1	13	2	1	1	1	16	1	1	27	2	2	4	2	1	1	2	1	2	16	1	1	1	1	2	/	1	1
EVMS(L)10 18/7.5	1	1	15	2	1	1	1	18	1	1	31	2	2	4	2	1	1	2	1	2	18	1	1	1	1	2	/	1	1
EVMS(L)10 19/7.5	1	1	16	2	1	1	1	19	1	1	33	2	2	4	2	1	1	2	1	2	19	1	1	1	1	2	/	1	1
EVMS(L)10 21/7.5	1	1	18	2	1	1	1	21	1	1	37	2	2	4	2	1	1	2	1	2	21	1	1	1	1	2	/	1	1
EVMS(L)10 22/11	1	1	19	2	1	1	1	22	1	1	39	2	2	4	2	1	1	2	1	2	22	1	1	1	1	2	/	1	1
EVMS(L)10 23/11	1	1	19	3	1	1	1	23	1	1	39	3	3	4	2	1	1	3	1	2	23	1	1	1	1	2	/	1	1

Pump Type	N°																											
	120-1	120-3	120-6	120-11*	120-13	128-1	128-3	128-5	128-6	130-1	130-2	131-1	135-1	135-6	137-1	140	160	162	212	212-1	212-2	219*	245	273-1	615**
EVMS(L)10 2/0.75	4	4	4	4	4	4	/	4	4	3	4	1	4	4	1	2	1	1	1	2	1	2	2	2	2
EVMS(L)10 3/1.5	4	4	4	4	4	4	/	4	4	3	4	1	4	4	1	2	1	1	1	2	1	2	2	2	2
EVMS(L)10 4/2.2	4	4	4	4	4	4	/	4	4	3	4	1	4	4	1	2	1	1	1	2	1	2	2	2	2
EVMS(L)10 5/2.2	4	4	4	4	4	4	/	4	4	3	4	1	4	4	1	2	1	1	1	2	1	2	2	2	2
EVMS(L)10 6/2.2	4	4	4	4	4	4	/	4	4	3	4	1	4	4	1	2	1	1	1	2	1	2	2	2	2
EVMS(L)10 7/3.0	4	4	4	4	4	4	/	4	4	3	4	1	4	4	1	2	1	1	1	2	1	2	2	2	2
EVMS(L)10 8/3.0	4	4	4	4	4	4	/	4	4	3	4	1	4	4	1	2	1	1	1	2	1	2	2	2	2
EVMS(L)10 9/4.0	4	4	4	4	4	4	/	4	4	3	4	1	4	4	1	2	1	1	1	2	1	2	2	2	2
EVMS(L)10 10/4.0	4	4	4	4	4	4	/	4	4	3	4	1	4	4	1	2	1	1	1	2	1	2	2	2	2
EVMS(L)10 11/4.0	4	4	4	4	4	4	/	4	4	3	4	1	4	4	1	2	1	1	1	2	1	2	2	2	2
EVMS(L)10 12/5.5	4	4	4	4	4	4	4	4	/	3	4	1	4	/	1	2	1	1	1	2	1	2	2	2	2
EVMS(L)10 14/5.5	4	4	4	4	4	4	4	4	/	3	4	1	4	/	1	2	1	1	1	2	1	2	2	2	2
EVMS(L)10 15/5.5	4	4	4	4	4	4	4	4	/	3	4	1	4	/	1	2	1	1	1	2	1	2	2	2	2
EVMS(L)10 16/7.5	4	4	4	/	4	4	4	4	/	3	4	1	4	/	1	2	1	1	1	2	1	/	2	2	2
EVMS(L)10 18/7.5	4	4	4	/	4	4	4	4	/	3	4	1	4	/	1	2	1	1	1	2	1	/	2	2	2
EVMS(L)10 19/7.5	4	4	4	/	4	4	4	4	/	3	4	1	4	/	1	2	1	1	1	2	1	/	2	2	2
EVMS(L)10 21/7.5	4	4	4	/	4	4	4	4	/	3	4	1	4	/	1	2	1	1	1	2	1	/	2	2	2
EVMS(L)10 22/11	4	4	4	/	4	4	4	4	/	3	4	1	4	/	1	2	1	1	1	2	1	/	2	2	2
EVMS(L)10 23/11	4	4	4	/	4	4	4	4	/	3	4	1	4	/	1	2	1	1	1	2	1	/	2	2	2

* only for Oval flange (N)
** only for Loose round flange (LF)
128-6 / 135-6: with Aluminium coupling (see drawing pag.18)

EBARA Pumps Europe S.p.A. reserves the right to make changes without prior notice.

PERFORMANCE CURVE
EVMSG10

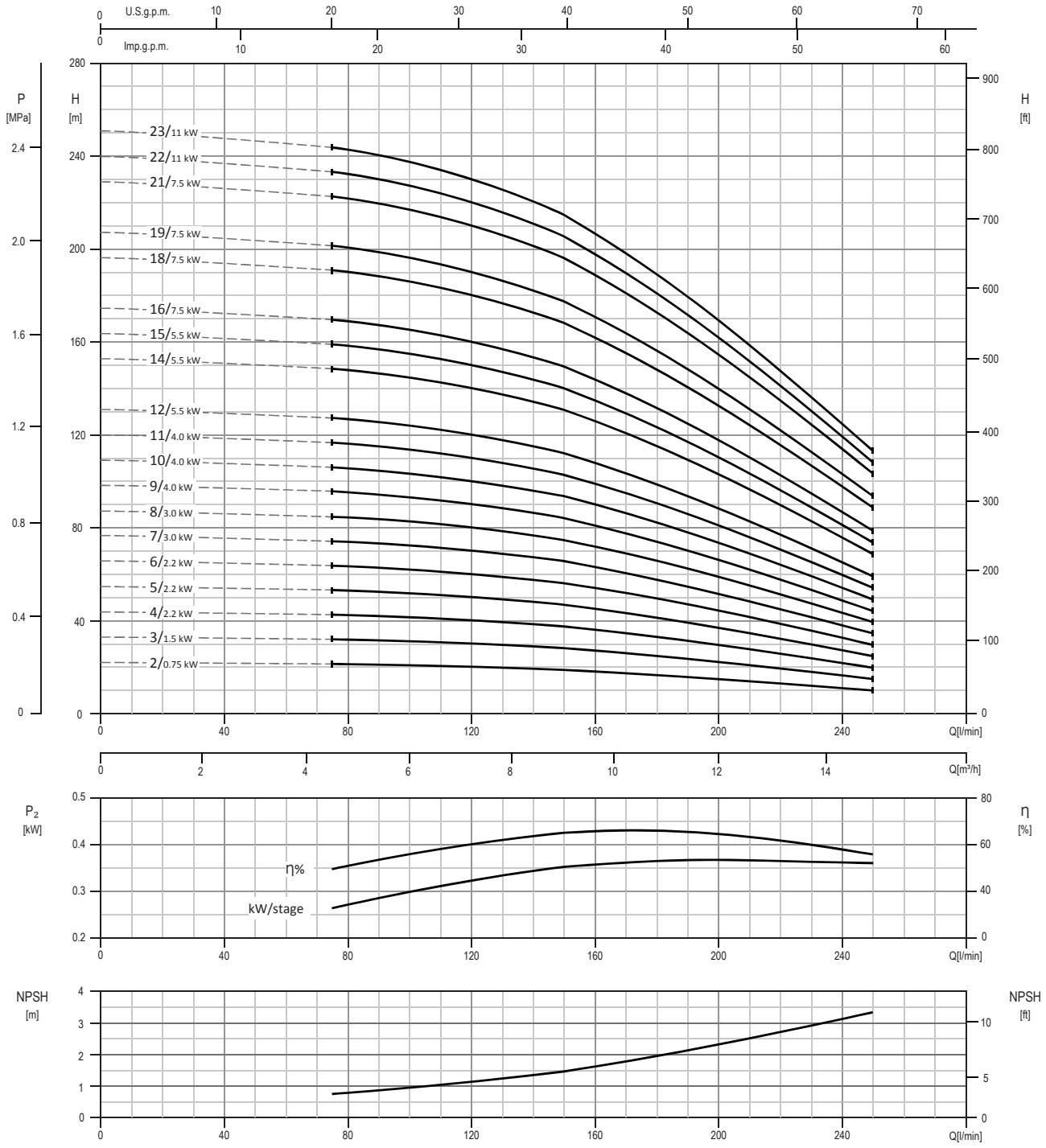

Test standard: ISO 9906:2012 - Grade 3B

EBARA Pumps Europe S.p.A. reserves the right to make changes without prior notice.

TECHNICAL DATA
EVMSG10

Dimensional sketch

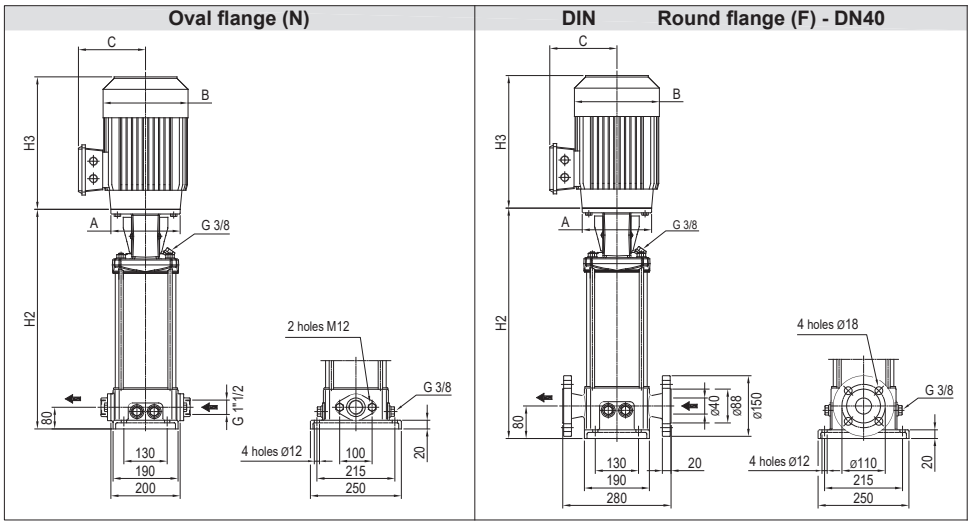

Dimensions [mm] and Weights [Kg]

Pump Type	Pmax [MPa]	Motor kW	Size	A Ø	1~ B	1~ C	3~ B	3~ C	Oval flange (N) H2	H2+H3 1~	H2+H3 3~	Weight Pump	Weight Pump + Motor 1~	Weight Pump + Motor 3~	Round flange (F) H2	H2+H3 1~	H2+H3 3~	Weight Pump	Weight Pump + Motor 1~	Weight Pump + Motor 3~
EVMSG10 2/0.75	1.6	0.75	80	120	160	142	141	102	343	572	576	21.6	31.6	30.1	343	572	576	24.3	34.3	32.8
EVMSG10 3/1.5	1.6	1.5	90	140	172	140	160	119	383	661	674	22.5	40.3	36.0	383	661	674	25.3	43.1	38.8
EVMSG10 4/2.2	1.6	2.2	90	140	172	140	160	119	413	691	704	23.3	42.8	38.3	413	691	704	26	45.5	41.0
EVMSG10 5/2.2	1.6	2.2	90	140	172	140	160	119	443	721	734	24.2	43.7	39.2	443	721	734	26.9	46.4	41.9
EVMSG10 6/2.2	1.6	2.2	90	140	172	140	160	119	473	751	764	25	44.5	40.0	473	751	764	27.7	47.2	42.7
EVMSG10 7/3.0	1.6	3.0	100	160	-	-	176	123	513	-	855	26	-	48.0	513	-	855	28.7	-	50.7
EVMSG10 8/3.0	1.6	3.0	100	160	-	-	176	123	543	-	885	26.8	-	48.8	543	-	885	29.5	-	51.5
EVMSG10 9/4.0	1.6	4.0	112	160	-	-	193	138	573	-	937	27.7	-	56.2	573	-	937	30.4	-	58.9
EVMSG10 10/4.0	1.6	4.0	112	160	-	-	193	138	603	-	967	28.5	-	57.0	603	-	967	31.2	-	59.7
EVMSG10 11/4.0	1.6	4.0	112	160	-	-	193	138	633	-	997	30.1	-	58.6	633	-	997	32.9	-	61.4
EVMSG10 12/5.5	1.6	5.5	132	300	-	-	220	152	761	-	1160	39.9	-	78.9	761	-	1160	42.7	-	81.7
EVMSG10 14/5.5	1.6	5.5	132	300	-	-	220	152	821	-	1220	41.8	-	80.8	821	-	1220	44.5	-	83.5
EVMSG10 15/5.5	1.6	5.5	132	300	-	-	220	152	851	-	1250	42.7	-	81.7	851	-	1250	45.4	-	84.4
EVMSG10 16/7.5	2.5	7.5	132	300	-	-	220	152	-	-	-	-	-	-	881	-	1300	46.3	-	92.3
EVMSG10 18/7.5	2.5	7.5	132	300	-	-	220	152	-	-	-	-	-	-	941	-	1360	47.7	-	93.7
EVMSG10 19/7.5	2.5	7.5	132	300	-	-	220	152	-	-	-	-	-	-	971	-	1390	49.1	-	95.1
EVMSG10 21/7.5	2.5	7.5	132	300	-	-	220	152	-	-	-	-	-	-	1031	-	1450	50.9	-	96.9
EVMSG10 22/11	2.5	11	160	350	-	-	259	180	-	-	-	-	-	-	1091	-	1531	53.2	-	115.7
EVMSG10 23/11	2.5	11	160	350	-	-	259	180	-	-	-	-	-	-	1121	-	1561	59.9	-	122.4

1.6 MPa=16 bar; 2.5 MPa=25 bar
- not available model

EBARA Pumps Europe S.p.A. reserves the right to make changes without prior notice.

SECTIONAL VIEW
EVMSG10

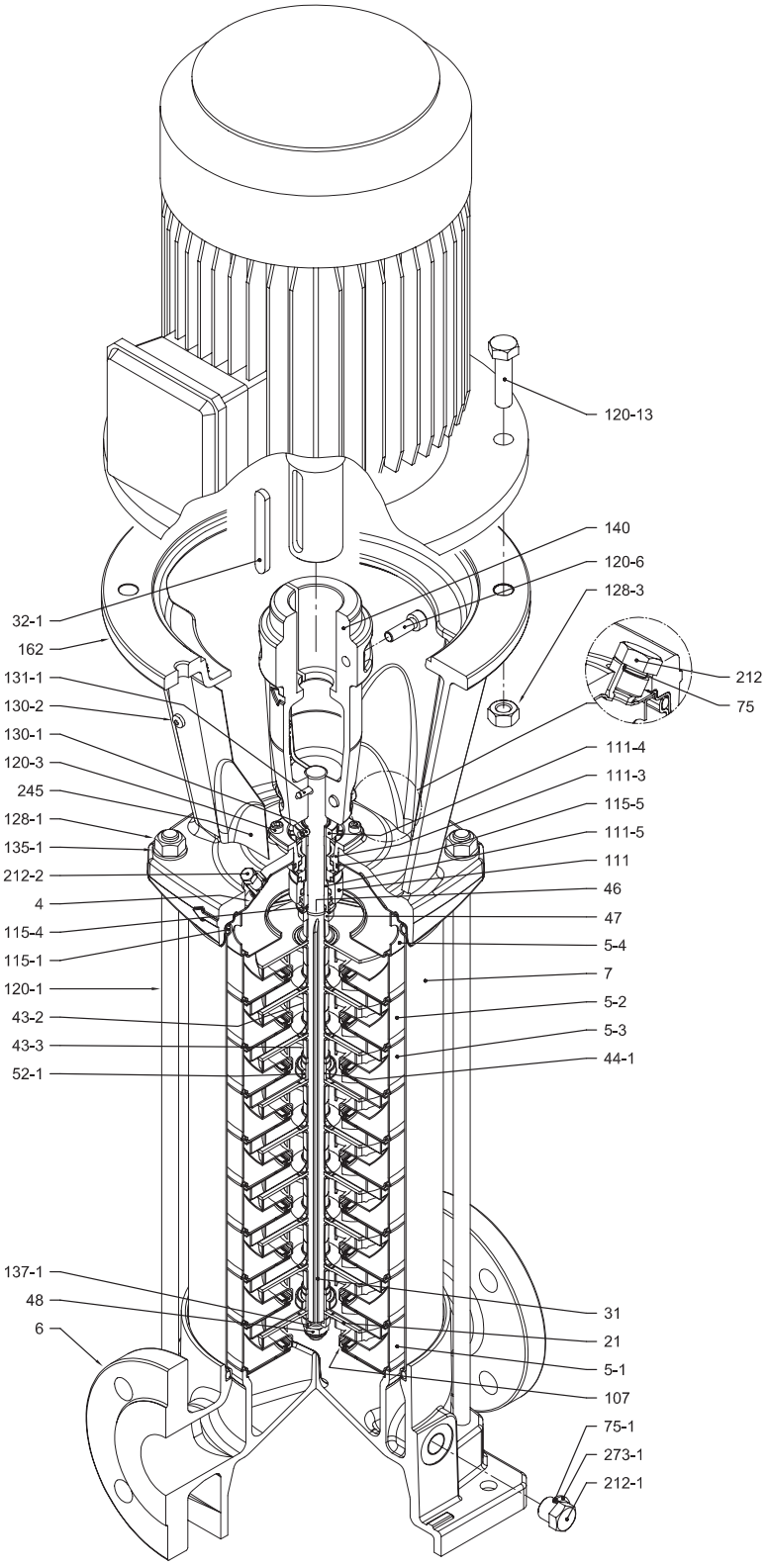

with Round flange (F)

EBARA Pumps Europe S.p.A. reserves the right to make changes without prior notice.

PIPE CONNECTION
EVMSG10

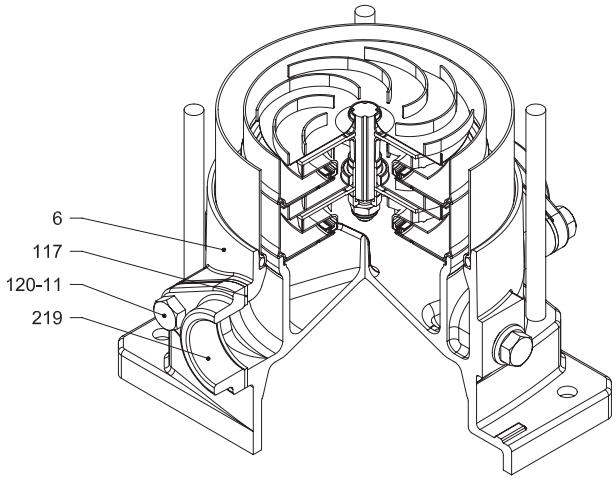

with Oval flange (N)

EBARA Pumps Europe S.p.A. reserves the right to make changes without prior notice.

SECTIONAL TABLE
EVMSG10

N°	PART NAME		MATERIAL EVMSG	DIMENSIONS	STANDARD
4	Casing cover		EN 1.4301 (AISI 304)		
5-1	Suction casing		EN 1.4301 (AISI 304)		
5-2	Intermediate casing		EN 1.4301 (AISI 304)		
5-3	Intermediate casing with bearing		EN 1.4301 (AISI 304)		
5-4	Discharge casing		EN 1.4301 (AISI 304)		
6	Bottom casing		Cast Iron EN-GJL-250		
7	Outer casing		EN 1.4301 (AISI 304)		
21	Impeller		EN 1.4301 (AISI 304)		
31	Shaft		EN 1.4301 (AISI 304)		
32-1	Adjuster key		EN 1.4301 (AISI 304)		
43-2	Shaft sleeve (intermediate)		EN 1.4301 (AISI 304)		
43-3	Shaft sleeve (bearing)		EN 1.4301 (AISI 304)		
44-1	Shaft sleeve bearing		Tungsten carbide		
46	Ring (mechanical seal)		EN 1.4404 (AISI 316L)		
47	Ring holder		EN 1.4404 (AISI 316L)		
48	Impeller nut		EN 1.4301 (AISI 304) with inox insert	M10	
52-1	Sleeve bearing		Tungsten carbide		
75	O-Ring (priming plug)		EPDM / FPM	Ø12.37x2.62	OR 3050
75-1	O-Ring (drainage plug)		EPDM / FPM		
107	Liner ring		EN 1.4301 (AISI 304) + PPS		
111	Mechanical seal		see pages 6-7		
111-3	Mechanical seal seat		EN 1.4308 (ASTM CF8)		
111-4	Seal holder		EN 1.4301 (AISI 304)		
111-5	Mechanical seal cartridge sleeve		EN 1.4301 (AISI 304)		
115-1	O-Ring (outer casing)		EPDM / FPM	Ø164.46x5.34	OR 6945
115-4	O-Ring (cartridge sleeve)		EPDM / FPM	Ø15.88x2.62	OR 4093
115-5	O-Ring (seal flange)		EPDM / FPM	Ø37.77x2.62	OR 4175
117	Flange gasket		EPDM / FPM		
120-1	Tie-rod		EN 1.4057 (AISI 431)	M12	
120-3	Screw (seal flange)		A2-70	M5x12	ISO 4762
120-6	Screw (pump coupling)	up to 4.0 kW	Galvanized steel	M6x25	ISO 4762
		from 5.5 kw to 7.5 kW		M8x20	ISO 4762
		above 11 kW		M10x30	ISO 4762
120-11	Screw (counterflange)		A2-70		
120-13	Screw for motor	MEC 80	Galvanized steel 8.8 strength class ISO 898/1	M6x20	ISO 4017
		MEC 90-100-112		M8x20	ISO 4017
		MEC 132		M12x40	UNI 5739
		MEC 160		M16x50	ISO 4017
128-1	Nut (tie rod)		A2-70	M12	ISO 4032
128-3	Nut (motor)	MEC 132	Galvanized steel	M12	ISO 4032
		MEC 160		M16	ISO 4032
128-6	Nut (aluminium coupling)	MEC 71-80-90-100-112	Galvanized steel	M6	ISO 4032
130-1	Set screw		EN 1.4301 (AISI 304)	M5x8	ISO 4026
130-2	Screw for coupling guard		A2-70	M5x6	UNI 7687
131-1	Pin for shaft		Carbon Steel	Ø5x35	ISO 2338
135-1	Washer (tie rod)		EN 1.4301 (AISI 304)	Ø13x24x2.5	ISO 7089
135-6	Washer (aluminium coupling)	up to 4.0 kW	Carbon Steel	Ø6	
137-1	Impeller spacer		EN 1.4301 (AISI 304)		
140	Coupling	up to 4.0 kW	Die cast Aluminium EN AB-AISI11Cu2 (Fe)		
		above 5.5 kW	Cast Iron		
162	Motor bracket		Cast iron EN-GJL-250		
212	Priming plug		EN 1.4301 (AISI 304)	G 3/8	
212-1	Drainage plug		EN 1.4301 (AISI 304)	G 3/8	
212-2	Venting plug		EN 1.4404 (AISI 316L)		
219	Counter flange	flange type: N	Galvanized steel		
		flange type: F	Cast Iron EN-GJL-250		
245	Coupling guard		EN 1.4301 (AISI 304)		
273-1	Washer (drainage plug)		EN 1.4301 (AISI 304)		

EBARA Pumps Europe S.p.A. reserves the right to make changes without prior notice.

QUANTITY FOR MODEL EVMSG10

Pump Type	N°																										
	4	5-1	5-2	5-3	5-4	6	7	21	31	32-1	43-2	43-3	44-1	46	47	48	52-1	75	75-1	107	111	111-3	111-4	111-5	115-1	115-4	115-5
EVMSG10 2/0.75	1	1	/	1	1	1	1	2	1	1	1	1	1	2	1	1	1	1	4	2	1	1	1	1	2	1	1
EVMSG10 3/1.5	1	1	1	1	1	1	1	3	1	1	3	1	1	2	1	1	1	1	4	3	1	1	1	1	2	1	1
EVMSG10 4/2.2	1	1	2	1	1	1	1	4	1	1	5	1	1	2	1	1	1	1	4	4	1	1	1	1	2	1	1
EVMSG10 5/2.2	1	1	3	1	1	1	1	5	1	1	7	1	1	2	1	1	1	1	4	5	1	1	1	1	2	1	1
EVMSG10 6/2.2	1	1	4	1	1	1	1	6	1	1	9	1	1	2	1	1	1	1	4	6	1	1	1	1	2	1	1
EVMSG10 7/3.0	1	1	5	1	1	1	1	7	1	1	11	1	1	2	1	1	1	1	4	7	1	1	1	1	2	1	1
EVMSG10 8/3.0	1	1	6	1	1	1	1	8	1	1	13	1	1	2	1	1	1	1	4	8	1	1	1	1	2	1	1
EVMSG10 9/4.0	1	1	7	1	1	1	1	9	1	1	15	1	1	2	1	1	1	1	4	9	1	1	1	1	2	1	1
EVMSG10 10/4.0	1	1	8	1	1	1	1	10	1	1	17	1	1	2	1	1	1	1	4	10	1	1	1	1	2	1	1
EVMSG10 11/4.0	1	1	9	1	1	1	1	11	1	1	19	1	1	2	1	1	1	1	4	11	1	1	1	1	2	1	1
EVMSG10 12/5.5	1	1	9	2	1	1	1	12	1	1	19	2	2	2	1	1	2	1	4	12	1	1	1	1	2	1	1
EVMSG10 14/5.5	1	1	11	2	1	1	1	14	1	1	23	2	2	2	1	1	2	1	4	14	1	1	1	1	2	1	1
EVMSG10 15/5.5	1	1	12	2	1	1	1	15	1	1	25	2	2	2	1	1	2	1	4	15	1	1	1	1	2	1	1
EVMSG10 16/7.5	1	1	13	2	1	1	1	16	1	1	27	2	2	2	1	1	2	1	4	16	1	1	1	1	2	1	1
EVMSG10 18/7.5	1	1	15	2	1	1	1	18	1	1	31	2	2	2	1	1	2	1	4	18	1	1	1	1	2	1	1
EVMSG10 19/7.5	1	1	16	2	1	1	1	19	1	1	33	2	2	2	1	1	2	1	4	19	1	1	1	1	2	1	1
EVMSG10 21/7.5	1	1	18	2	1	1	1	21	1	1	37	2	2	2	1	1	2	1	4	21	1	1	1	1	2	1	1
EVMSG10 22/11	1	1	19	2	1	1	1	22	1	1	39	2	2	2	1	1	2	1	4	22	1	1	1	1	2	1	1
EVMSG10 23/11	1	1	19	3	1	1	1	23	1	1	39	3	3	2	1	1	3	1	4	23	1	1	1	1	2	1	1

Pump Type	N°																						
	117*	120-1	120-3	120-6	120-11*	120-13	128-1	128-3	128-6	130-1	130-2	131-1	135-1	135-6	137-1	140	162	212	212-1	212-2	219*	245	273-1
EVMSG10 2/0.75	2	4	4	4	4	4	4	/	4	3	4	1	4	4	1	2	1	1	4	1	2	2	4
EVMSG10 3/1.5	2	4	4	4	4	4	4	/	4	3	4	1	4	4	1	2	1	1	4	1	2	2	4
EVMSG10 4/2.2	2	4	4	4	4	4	4	/	4	3	4	1	4	4	1	2	1	1	4	1	2	2	4
EVMSG10 5/2.2	2	4	4	4	4	4	4	/	4	3	4	1	4	4	1	2	1	1	4	1	2	2	4
EVMSG10 6/2.2	2	4	4	4	4	4	4	/	4	3	4	1	4	4	1	2	1	1	4	1	2	2	4
EVMSG10 7/3.0	2	4	4	4	4	4	4	/	4	3	4	1	4	4	1	2	1	1	4	1	2	2	4
EVMSG10 8/3.0	2	4	4	4	4	4	4	/	4	3	4	1	4	4	1	2	1	1	4	1	2	2	4
EVMSG10 9/4.0	2	4	4	4	4	4	4	/	4	3	4	1	4	4	1	2	1	1	4	1	2	2	4
EVMSG10 10/4.0	2	4	4	4	4	4	4	/	4	3	4	1	4	4	1	2	1	1	4	1	2	2	4
EVMSG10 11/4.0	2	4	4	4	4	4	4	/	4	3	4	1	4	4	1	2	1	1	4	1	2	2	4
EVMSG10 12/5.5	2	4	4	4	4	4	4	4	/	3	4	1	4	/	1	2	1	1	4	1	2	2	4
EVMSG10 14/5.5	2	4	4	4	4	4	4	4	/	3	4	1	4	/	1	2	1	1	4	1	2	2	4
EVMSG10 15/5.5	2	4	4	4	4	4	4	4	/	3	4	1	4	/	1	2	1	1	4	1	2	2	4
EVMSG10 16/7.5	/	4	4	4	/	4	4	4	/	3	4	1	4	/	1	2	1	1	4	1	/	2	4
EVMSG10 18/7.5	/	4	4	4	/	4	4	4	/	3	4	1	4	/	1	2	1	1	4	1	/	2	4
EVMSG10 19/7.5	/	4	4	4	/	4	4	4	/	3	4	1	4	/	1	2	1	1	4	1	/	2	4
EVMSG10 21/7.5	/	4	4	4	/	4	4	4	/	3	4	1	4	/	1	2	1	1	4	1	/	2	4
EVMSG10 22/11	/	4	4	4	/	4	4	4	/	3	4	1	4	/	1	2	1	1	4	1	/	2	4
EVMSG10 23/11	/	4	4	4	/	4	4	4	/	3	4	1	4	/	1	2	1	1	4	1	/	2	4

* only for Oval flange (N)
128-6 / 135-6: with Aluminium coupling (see drawing pag.18)

EBARA Pumps Europe S.p.A. reserves the right to make changes without prior notice.

PERFORMANCE CURVE
EVMS(L)15

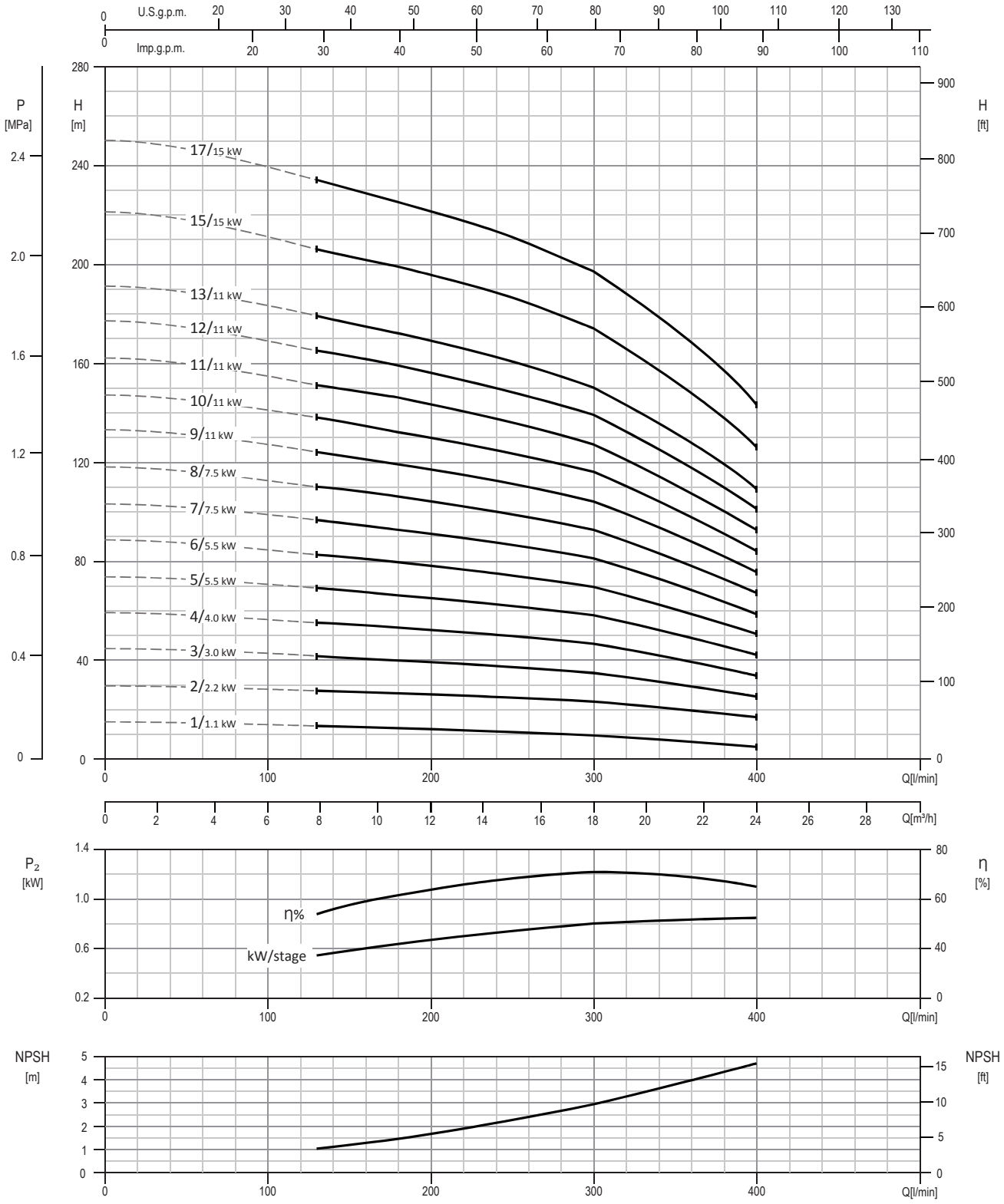

Test standard: ISO 9906:2012 - Grade 3B

EBARA Pumps Europe S.p.A. reserves the right to make changes without prior notice.

TECHNICAL DATA
EVMS(L)15

Dimensional sketch

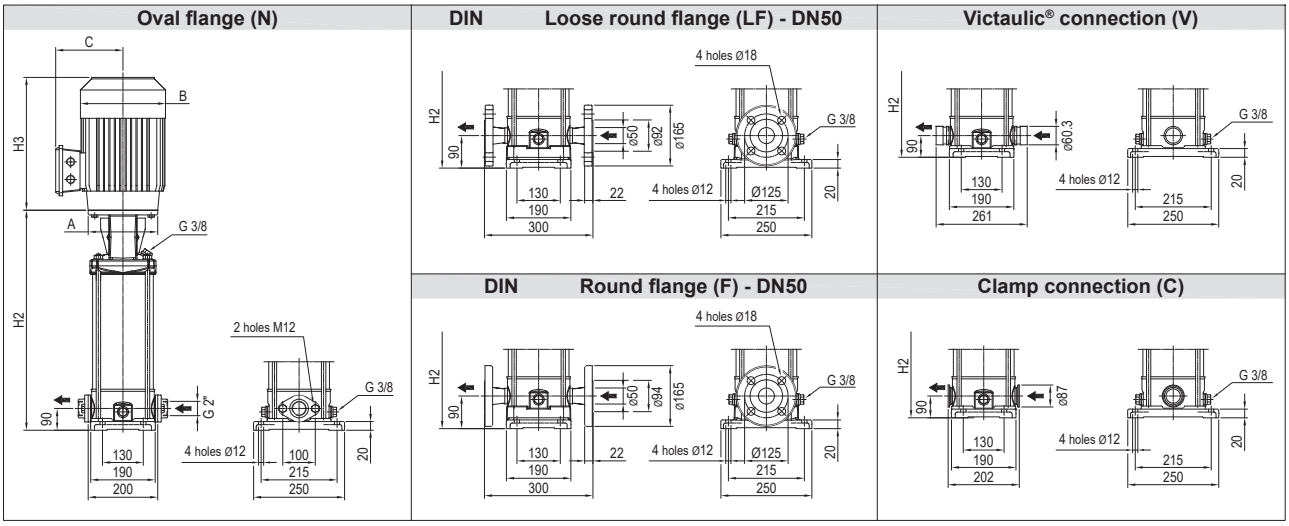

Dimensions [mm] and Weights [Kg]

Pump Type	Pmax [MPa]	Motor kW	Size	A Ø	1~ B	1~ C	3~ B	3~ C	Oval flange (N) H2	Oval flange (N) H2+H3 1~	Oval flange (N) H2+H3 3~	Oval flange (N) Weight Pump	Oval flange (N) Weight Pump + Motor 1~	Oval flange (N) Weight Pump + Motor 3~	Loose round flange (LF) Round flange (F) H2	Loose round flange (LF) Round flange (F) H2+H3 1~	Loose round flange (LF) Round flange (F) H2+H3 3~	Loose round flange (LF) Round flange (F) Weight Pump	Loose round flange (LF) Round flange (F) Weight Pump + Motor 1~	Loose round flange (LF) Round flange (F) Weight Pump + Motor 3~	Victaulic® connection (V) Clamp connection (C) H2	Victaulic® connection (V) Clamp connection (C) H2+H3 1~	Victaulic® connection (V) Clamp connection (C) H2+H3 3~	Victaulic® connection (V) Clamp connection (C) Weight Pump	Victaulic® connection (V) Clamp connection (C) Weight Pump + Motor 1~	Victaulic® connection (V) Clamp connection (C) Weight Pump + Motor 3~
EVMS(L)15 1/1.1	1.6	1.1	80	120	160	142	141	102	377	606	621	18.0	29.0	28.0	377	606	621	18.8	29.8	28.8	377	606	621	16.9	27.9	26.9
EVMS(L)15 2/2.2	1.6	2.2	90	140	172	140	160	119	387	665	678	18.3	37.8	33.3	387	665	678	19.1	38.6	34.1	387	665	678	17.2	36.7	32.2
EVMS(L)15 3/3.0	1.6	3.0	100	160	-	-	176	123	437	-	779	19.6	-	41.6	437	-	779	20.4	-	42.4	437	-	779	18.5	-	40.5
EVMS(L)15 4/4.0	1.6	4.0	112	160	-	-	193	138	477	-	841	20.8	-	49.3	477	-	841	21.6	-	50.1	477	-	841	19.7	-	48.2
EVMS(L)15 5/5.5	1.6	5.5	132	300	-	-	220	152	614	-	1013	30.5	-	69.5	614	-	1013	31.3	-	70.3	614	-	1013	29.4	-	68.4
EVMS(L)15 6/5.5	1.6	5.5	132	300	-	-	220	152	654	-	1053	31.7	-	70.7	654	-	1053	32.5	-	71.5	654	-	1053	30.6	-	69.6
EVMS(L)15 7/7.5	1.6	7.5	132	300	-	-	220	152	694	-	1113	33.9	-	79.9	694	-	1113	34.7	-	80.7	694	-	1113	32.8	-	78.8
EVMS(L)15 8/7.5	1.6	7.5	132	300	-	-	220	152	734	-	1153	35.2	-	81.2	734	-	1153	36.0	-	82.0	734	-	1153	34.1	-	80.1
EVMS(L)15 9/11	1.6	11	160	350	-	-	259	180	804	-	1244	36.5	-	99.0	804	-	1244	37.3	-	99.8	804	-	1244	35.4	-	97.9
EVMS(L)15 10/11	1.6	11	160	350	-	-	259	180	844	-	1284	37.8	-	100.3	844	-	1284	38.6	-	101.1	844	-	1284	36.7	-	99.2
EVMS(L)15 11/11	1.6	11	160	350	-	-	259	180	884	-	1324	45.8	-	108.3	884	-	1324	46.6	-	109.1	884	-	1324	44.7	-	107.2
EVMS(L)15 12/11	2.5	11	160	350	-	-	259	180	-	-	-	-	-	-	924	-	1364	47.9	-	110.4	924	-	1364	46.0	-	108.5
EVMS(L)15 13/11	2.5	11	160	350	-	-	259	180	-	-	-	-	-	-	964	-	1404	49.2	-	111.7	964	-	1404	47.3	-	109.8
EVMS(L)15 15/15	2.5	15	160	350	-	-	311	240	-	-	-	-	-	-	1044	-	1539	51.8	-	152.8	1044	-	1539	49.9	-	150.9
EVMS(L)15 17/15	2.5	15	160	350	-	-	311	240	-	-	-	-	-	-	1124	-	1619	54.7	-	155.7	1124	-	1619	52.8	-	153.8

1.6 MPa=16 bar; 2.5 MPa=25 bar
- not available model

EBARA Pumps Europe S.p.A. reserves the right to make changes without prior notice.

SECTIONAL VIEW
EVMS(L)15

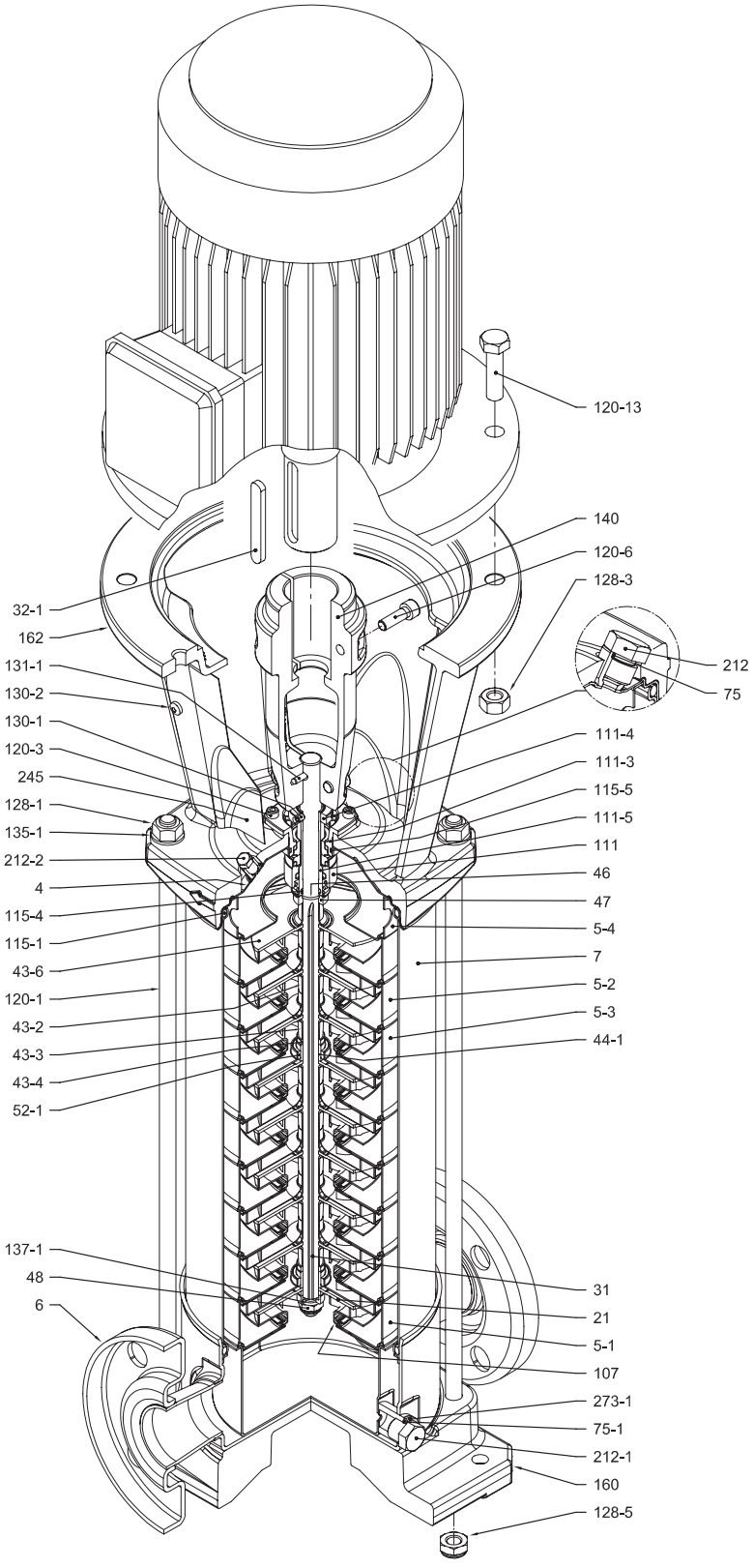

with Round flange (F)

EBARA Pumps Europe S.p.A. reserves the right to make changes without prior notice.

PIPE CONNECTION
EVMS(L)15

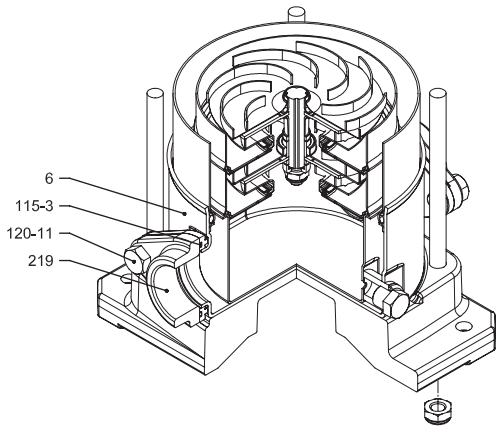

with Oval flange (N)

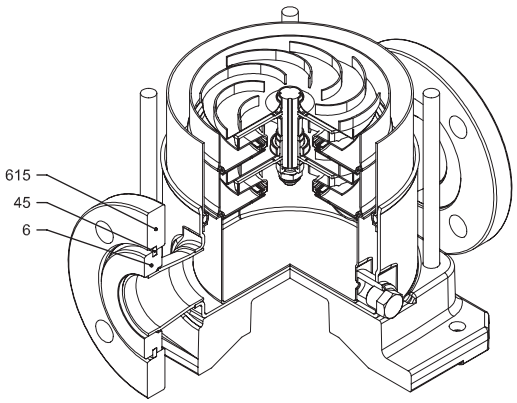

with Loose round flange (LF)

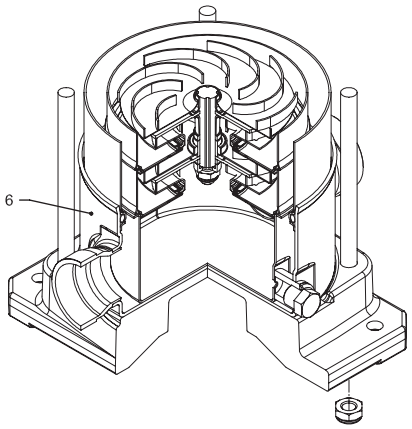

with Victaulic® connection(V)

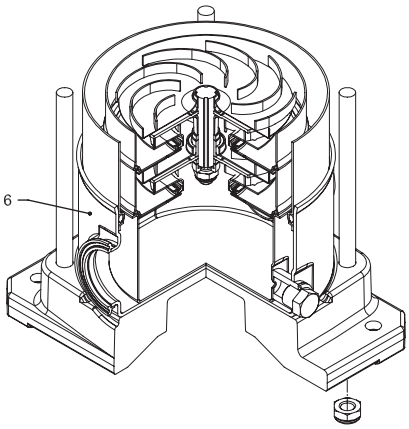

with Clamp connection (C)

EBARA Pumps Europe S.p.A. reserves the right to make changes without prior notice.

SECTIONAL TABLE
EVMS(L)15

N°	PART NAME		MATERIAL		DIMENSIONS	STANDARD
			EVMS	EVMSL		
4	Casing cover		EN 1.4301 (AISI 304)	EN 1.4404 (AISI 316L)		
5-1	Suction casing		EN 1.4301 (AISI 304)	EN 1.4404 (AISI 316L)		
5-2	Intermediate casing		EN 1.4301 (AISI 304)	EN 1.4404 (AISI 316L)		
5-3	Intermediate casing with bearing		EN 1.4301 (AISI 304)	EN 1.4404 (AISI 316L)		
5-4	Discharge casing		EN 1.4301 (AISI 304)	EN 1.4404 (AISI 316L)		
6	Bottom casing		EN 1.4301 (AISI 304)	EN 1.4404 (AISI 316L)		
7	Outer casing		EN 1.4301 (AISI 304)	EN 1.4404 (AISI 316L)		
21	Impeller		EN 1.4301 (AISI 304)	EN 1.4404 (AISI 316L)		
31	Shaft		EN 1.4301 (AISI 304) - EN 1.4462 (AISI 329A)	EN 1.4404 (AISI 316L) - EN 1.4462 (AISI 329A)		
32-1	Adjuster key		EN 1.4301 (AISI 304)			
43-2	Shaft sleeve (intermediate)		EN 1.4301 (AISI 304)	EN 1.4404 (AISI 316L)		
43-3	Shaft sleeve (bearing)		EN 1.4301 (AISI 304)	EN 1.4404 (AISI 316L)		
43-4	Shaft sleeve (adjustment)		EN 1.4301 (AISI 304)	EN 1.4404 (AISI 316L)		
43-6	Washer		EN 1.4404 (AISI 316L)		Ø26x2.5	
44-1	Shaft sleeve bearing		Tungsten carbide			
45	Flange holder		EN 1.4301 (AISI 304)			
46	Ring (mechanical seal)		EN 1.4404 (AISI 316L)			
47	Ring holder		EN 1.4301 (AISI 304)	EN 1.4404 (AISI 316L)		
48	Impeller nut		EN 1.4301 (AISI 304) with inox insert	EN 1.4401 (AISI 316) with inox insert	M10	
52-1	Sleeve bearing		Tungsten carbide			
75	O-Ring (priming plug)		EPDM / FPM		Ø12.37x2.62	OR 3050
75-1	O-Ring (drainage plug)		EPDM / FPM			
107	Liner ring		EN 1.4301 (AISI 304) + PPS	EN 1.4404 (AISI 316L) + PPS		
111	Mechanical seal		see pages 6-7			
111-3	Mechanical seal seat		EN 1.4308 (ASTM CF8)	EN 1.4408 (ASTM CF8M)		
111-4	Seal holder		EN 1.4301 (AISI 304)			
111-5	Mechanical seal cartridge sleeve		EN 1.4301 (AISI 304)	EN 1.4404 (AISI 316L)		
115-1	O-Ring (outer casing)		EPDM / FPM		Ø164.46x5.34	OR 6945
115-3	O-Ring		EPDM / FPM			
115-4	O-Ring (cartridge sleeve)		EPDM / FPM		Ø15.88x2.62	OR 4093
115-5	O-Ring (seal flange)		EPDM / FPM		Ø37.77x2.62	OR 4175
120-1	Tie-rod		EN 1.4057 (AISI 431)		M12	
120-3	Screw (seal flange)		A2-70		M5x12	ISO 4762
120-6	Screw (pump coupling)	up to 4.0 kW	Galvanized steel		M6x25	ISO 4762
		from 5.5 kW to 7.5 kW			M8x20	ISO 4762
		above 11 kW			M10x30	ISO 4762
120-11	Screw (counterflange)		A2-70			
120-13	Screw for motor	MEC 80	Galvanized steel 8.8 strength class ISO 898/1		M6x20	ISO 4017
		MEC 90-100-112			M8x20	ISO 4017
		MEC 132			M12x40	ISO 4017
		MEC 160			M16x50	ISO 4017
128-1	Nut (tie rod)		A2-70		M12	ISO 4032
128-3	Nut (motor)	MEC 132	Galvanized steel		M12	ISO 4032
		MEC 160			M16	ISO 4032
128-5	Nut (tie rod)		A2-70		M12	UNI 7474
128-6	Nut (aluminium coupling)	MEC 71-80-90-100-112	Galvanized steel		M6	ISO 4032
130-1	Set screw		EN 1.4301 (AISI 304)		M5x8	ISO 4026
130-2	Screw for coupling guard		A2-70		M5x6	UNI 7687
131-1	Pin for shaft		Carbon Steel		Ø5x35	ISO 2338
135-1	Washer (tie rod)		EN 1.4301 (AISI 304)		Ø13x24x2.5	ISO 7089
135-6	Washer (aluminium coupling)	up to 4.0 kW	Carbon Steel		Ø6	
137-1	Impeller spacer		EN 1.4301 (AISI 304)	EN 1.4404 (AISI 316L)		
140	Coupling	up to 4.0 kW	Die cast Aluminium EN AB-AISI11 Cu2 (Fe)			
		above 5.5 kW	Cast Iron			
160	Base		Die cast Aluminium EN AB-AISI11 Cu2 (Fe)			
162	Motor bracket		Cast iron EN-GJL-250			
212	Priming plug		EN 1.4301 (AISI 304)	EN 1.4404 (AISI 316L)	G 3/8	
212-1	Drainage plug		EN 1.4301 (AISI 304)	EN 1.4404 (AISI 316L)	G 3/8	
212-2	Venting plug		EN 1.4404 (AISI 316L)			
219	Counter flange	flange type: N	EN 1.4308 (ASTM CF8)	EN 1.4408 (ASTM CF8M)		
		flange type: LF-F-V-C	EN 1.4301 (AISI 304)	EN 1.4404 (AISI 316L)		
245	Coupling guard		EN 1.4301 (AISI 304)			
273-1	Washer (drainage plug)		EN 1.4301 (AISI 304)	EN 1.4404 (AISI 316L)		
615	Flange		Carbon Steel			

EBARA Pumps Europe S.p.A. reserves the right to make changes without prior notice.

QUANTITY FOR MODEL EVMS(L)15

Pump Type	N°																													
	4	5-1	5-2	5-3	5-4	6	7	21	31***	32-1	43-2	43-3	43-4	43-6	44-1	45**	46	47	48	52-1	75	75-1	107	111	111-3	111-4	111-5	115-1	115-3*	115-4	115-5
EVMS(L)15 1/1.1	1	1	/	1	1	1	1	1	1	1	1	1	1	1	1	4	2	1	1	1	1	2	1	1	1	1	1	2	2	1	1
EVMS(L)15 2/2.2	1	1	/	1	1	1	1	2	1	1	1	1	1	/	1	4	2	1	1	1	1	2	2	1	1	1	1	2	2	1	1
EVMS(L)15 3/3.0	1	1	1	1	1	1	1	3	1	1	3	1	1	/	1	4	2	1	1	1	1	2	3	1	1	1	1	2	2	1	1
EVMS(L)15 4/4.0	1	1	2	1	1	1	1	4	1	1	5	1	1	/	1	4	2	1	1	1	1	2	4	1	1	1	1	2	2	1	1
EVMS(L)15 5/5.5	1	1	3	1	1	1	1	5	1	1	7	1	1	/	1	4	2	1	1	1	1	2	5	1	1	1	1	2	2	1	1
EVMS(L)15 6/5.5	1	1	4	1	1	1	1	6	1	1	9	1	1	/	1	4	2	1	1	1	1	2	6	1	1	1	1	2	2	1	1
EVMS(L)15 7/7.5	1	1	4	2	1	1	1	7	1	1	9	2	2	/	2	4	2	1	1	2	1	2	7	1	1	1	1	2	2	1	1
EVMS(L)15 8/7.5	1	1	5	2	1	1	1	8	1	1	11	2	2	/	2	4	2	1	1	2	1	2	8	1	1	1	1	2	2	1	1
EVMS(L)15 9/11	1	1	6	2	1	1	1	9	1	1	13	2	2	/	2	4	2	1	1	2	1	2	9	1	1	1	1	2	2	1	1
EVMS(L)15 10/11	1	1	7	2	1	1	1	10	1	1	15	2	2	/	2	4	2	1	1	2	1	2	10	1	1	1	1	2	2	1	1
EVMS(L)15 11/11	1	1	8	2	1	1	1	11	1	1	17	2	2	/	2	4	2	1	1	2	1	2	11	1	1	1	1	2	2	1	1
EVMS(L)15 12/11	1	1	9	2	1	1	1	12	1	1	19	2	2	/	2	4	2	1	1	2	1	2	12	1	1	1	1	2	/	1	1
EVMS(L)15 13/11	1	1	10	2	1	1	1	13	1	1	21	2	2	/	2	4	2	1	1	2	1	2	13	1	1	1	1	2	/	1	1
EVMS(L)15 15/15	1	1	12	2	1	1	1	15	1	1	25	2	2	/	2	4	2	1	1	2	1	2	15	1	1	1	1	2	/	1	1
EVMS(L)15 17/15	1	1	13	3	1	1	1	17	1	1	27	2	3	/	3	4	2	1	1	3	1	2	17	1	1	1	1	2	/	1	1

Pump Type	N°																								
	120-1	120-3	120-6	120-11*	120-13	128-1	128-3	128-5	128-6	130-1	130-2	131-1	135-1	135-6	137-1	140	160	162	212	212-1	212-2	219*	245	273-1	615**
EVMS(L)15 1/1.1	4	4	4	4	4	4	/	4	4	3	4	1	4	4	1	2	1	1	1	2	1	2	2	2	2
EVMS(L)15 2/2.2	4	4	4	4	4	4	/	4	4	3	4	1	4	4	1	2	1	1	1	2	1	2	2	2	2
EVMS(L)15 3/3.0	4	4	4	4	4	4	/	4	4	3	4	1	4	4	1	2	1	1	1	2	1	2	2	2	2
EVMS(L)15 4/4.0	4	4	4	4	4	4	/	4	4	3	4	1	4	4	1	2	1	1	1	2	1	2	2	2	2
EVMS(L)15 5/5.5	4	4	4	4	4	4	4	4	/	3	4	1	4	/	1	2	1	1	1	2	1	2	2	2	2
EVMS(L)15 6/5.5	4	4	4	4	4	4	4	4	/	3	4	1	4	/	1	2	1	1	1	2	1	2	2	2	2
EVMS(L)15 7/7.5	4	4	4	4	4	4	4	4	/	3	4	1	4	/	1	2	1	1	1	2	1	2	2	2	2
EVMS(L)15 8/7.5	4	4	4	4	4	4	4	4	/	3	4	1	4	/	1	2	1	1	1	2	1	2	2	2	2
EVMS(L)15 9/11	4	4	4	4	4	4	4	4	/	3	4	1	4	/	1	2	1	1	1	2	1	2	2	2	2
EVMS(L)15 10/11	4	4	4	4	4	4	4	4	/	3	4	1	4	/	1	2	1	1	1	2	1	2	2	2	2
EVMS(L)15 11/11	4	4	4	4	4	4	4	4	/	3	4	1	4	/	1	2	1	1	1	2	1	2	2	2	2
EVMS(L)15 12/11	4	4	4	/	4	4	4	4	/	3	4	1	4	/	1	2	1	1	1	2	1	/	2	2	2
EVMS(L)15 13/11	4	4	4	/	4	4	4	4	/	3	4	1	4	/	1	2	1	1	1	2	1	/	2	2	2
EVMS(L)15 15/15	4	4	4	/	4	4	4	4	/	3	4	1	4	/	1	2	1	1	1	2	1	/	2	2	2
EVMS(L)15 17/15	4	4	4	/	4	4	4	4	/	3	4	1	4	/	1	2	1	1	1	2	1	/	2	2	2

* only for Oval flange (N)

** only for Loose round flange (LF)

** ☐ shaft in EN 1.4462 (AISI 329A)

128-6 / 135-6: with Aluminium coupling (see drawing pag.18)

EBARA Pumps Europe S.p.A. reserves the right to make changes without prior notice.

PERFORMANCE CURVE
EVMSG15

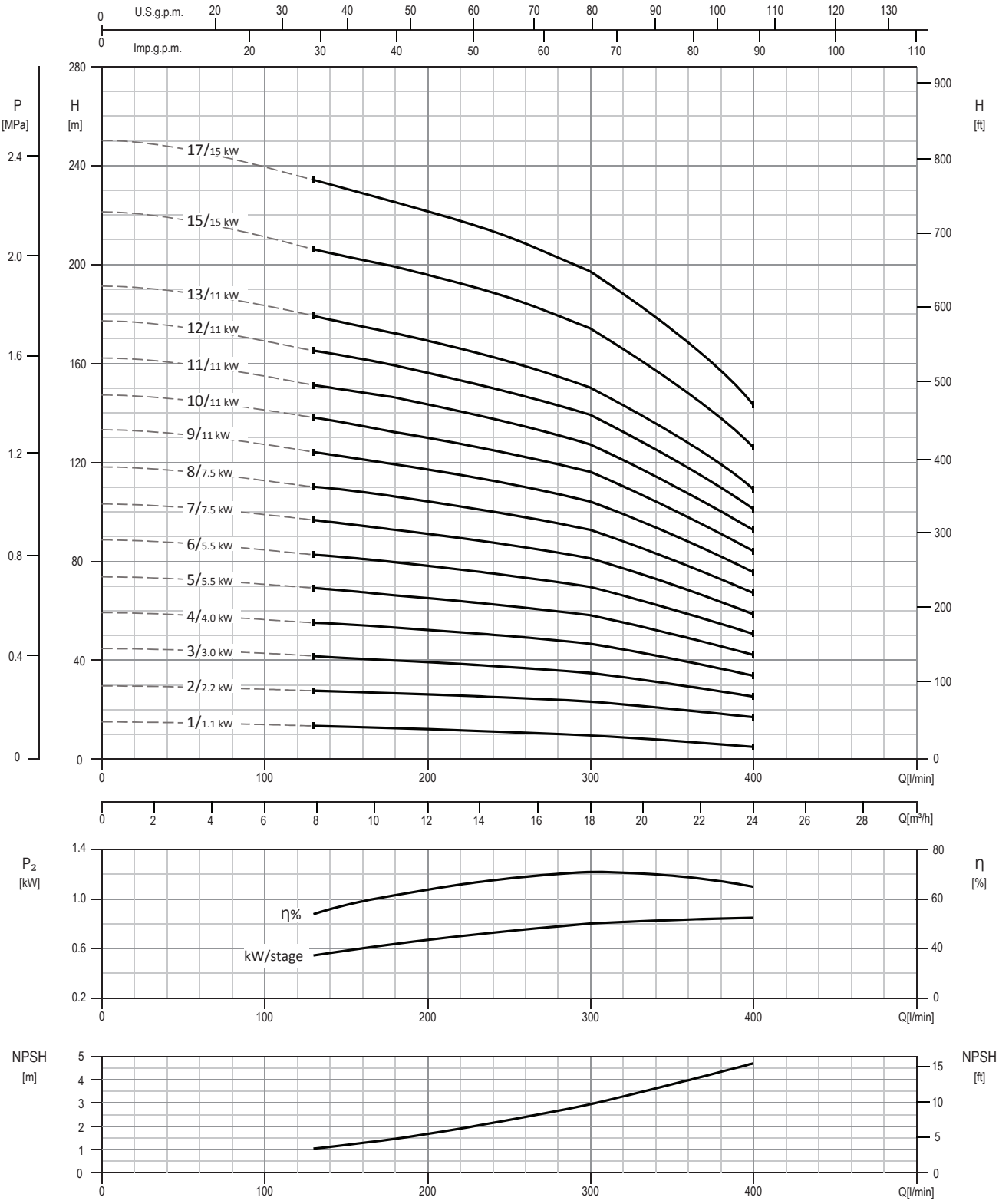

Test standard: ISO 9906:2012 - Grade 3B

EBARA Pumps Europe S.p.A. reserves the right to make changes without prior notice.

TECHNICAL DATA
EVMSG15

Dimensional sketch

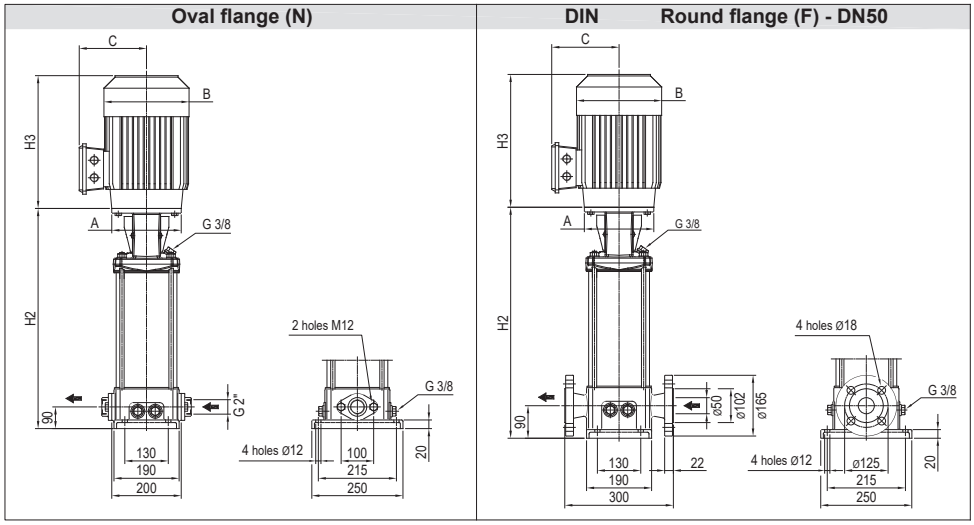

Dimensions [mm] and Weights [Kg]

Pump Type	Pmax [MPa]	Motor kW	Size	A Ø	1~ B	1~ C	3~ B	3~ C	Oval flange (N) H2	H2+H3 1~	H2+H3 3~	Weight Pump	Weight Pump + Motor 1~	Weight Pump + Motor 3~	Round flange (F) H2	H2+H3 1~	H2+H3 3~	Weight Pump	Weight Pump + Motor 1~	Weight Pump + Motor 3~
EVMSG15 1/1.1	1.6	1.1	80	120	160	142	141	102	377	606	621	22.4	33.4	32.4	377	606	621	26.9	37.9	36.9
EVMSG15 2/2.2	1.6	2.2	90	140	172	140	160	119	387	665	678	22.6	42.1	37.6	387	665	678	27.2	46.7	42.2
EVMSG15 3/3.0	1.6	3.0	100	160	-	-	176	123	437	-	779	24.0	-	46.0	437	-	779	28.5	-	50.5
EVMSG15 4/4.0	1.6	4.0	112	160	-	-	193	138	477	-	841	25.2	-	53.7	477	-	841	29.7	-	58.2
EVMSG15 5/5.5	1.6	5.5	132	300	-	-	220	152	614	-	1013	34.9	-	73.9	614	-	1013	39.5	-	78.5
EVMSG15 6/5.5	1.6	5.5	132	300	-	-	220	152	654	-	1053	36.1	-	75.1	654	-	1053	40.7	-	79.7
EVMSG15 7/7.5	1.6	7.5	132	300	-	-	220	152	694	-	1113	38.3	-	84.3	694	-	1113	42.9	-	88.9
EVMSG15 8/7.5	1.6	7.5	132	300	-	-	220	152	734	-	1153	39.6	-	85.6	734	-	1153	44.2	-	90.2
EVMSG15 9/11	1.6	11	160	350	-	-	259	180	804	-	1244	40.9	-	103.4	804	-	1244	45.5	-	108.0
EVMSG15 10/11	1.6	11	160	350	-	-	259	180	844	-	1284	42.2	-	104.7	844	-	1284	46.8	-	109.3
EVMSG15 11/11	1.6	11	160	350	-	-	259	180	884	-	1324	50.2	-	112.7	884	-	1324	54.7	-	117.2
EVMSG15 12/11	2.5	11	160	350	-	-	259	180	-	-	-	-	-	-	924	-	1364	56.0	-	118.5
EVMSG15 13/11	2.5	11	160	350	-	-	259	180	-	-	-	-	-	-	964	-	1404	57.3	-	119.8
EVMSG15 15/15	2.5	15	160	350	-	-	311	240	-	-	-	-	-	-	1044	-	1539	59.9	-	160.9
EVMSG15 17/15	2.5	15	160	350	-	-	311	240	-	-	-	-	-	-	1124	-	1619	62.8	-	163.8

1.6 MPa=16 bar; 2.5 MPa=25 bar
- not available model

EBARA
EBARA Pumps Europe
EBARA Pumps Europe S.p.A. reserves the right to make changes without prior notice.

SECTIONAL VIEW
EVMSG15

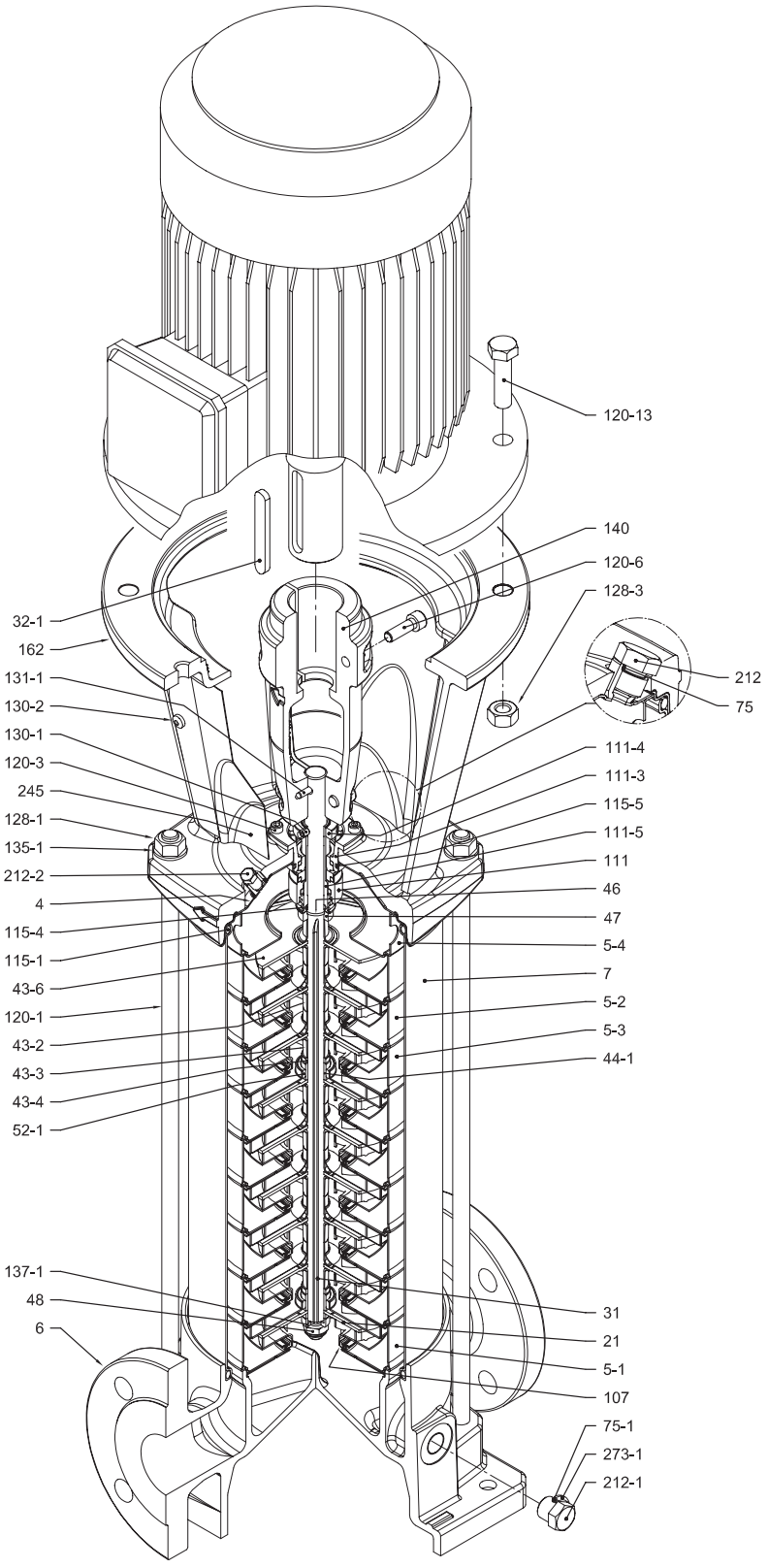

with Round flange (F)

EBARA Pumps Europe S.p.A. reserves the right to make changes without prior notice.

PIPE CONNECTION
EVMSG15

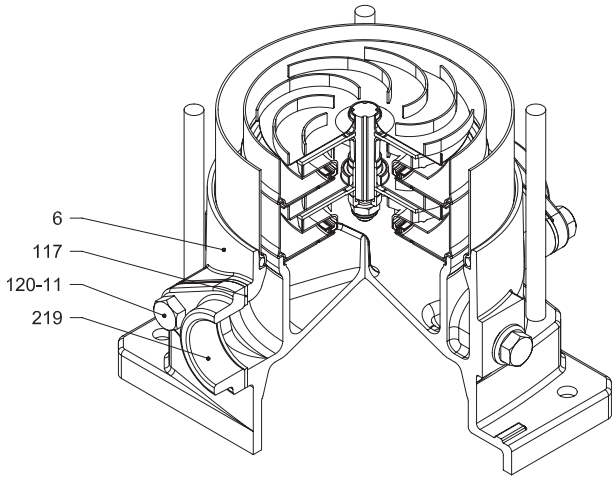

with Oval flange (N)

EBARA Pumps Europe S.p.A. reserves the right to make changes without prior notice.

SECTIONAL TABLE
EVMSG15

N°	PART NAME		MATERIAL EVMSG	DIMENSIONS	STANDARD
4	Casing cover		EN 1.4301 (AISI 304)		
5-1	Suction casing		EN 1.4301 (AISI 304)		
5-2	Intermediate casing		EN 1.4301 (AISI 304)		
5-3	Intermediate casing with bearing		EN 1.4301 (AISI 304)		
5-4	Discharge casing		EN 1.4301 (AISI 304)		
6	Bottom casing		Cast Iron EN-GJL-250		
7	Outer casing		EN 1.4301 (AISI 304)		
21	Impeller		EN 1.4301 (AISI 304)		
31	Shaft		EN 1.4301 (AISI 304) - EN 1.4462 (AISI 329A)		
32-1	Adjuster key		EN 1.4301 (AISI 304)		
43-2	Shaft sleeve (intermediate)		EN 1.4301 (AISI 304)		
43-3	Shaft sleeve (bearing)		EN 1.4301 (AISI 304)		
43-4	Shaft sleeve (adjustment)		EN 1.4301 (AISI 304)		
43-6	Washer		EN 1.4404 (AISI 316L)	Ø26x2.5	
44-1	Shaft sleeve bearing		Tungsten carbide		
46	Ring (mechanical seal)		EN 1.4404 (AISI 316L)		
47	Ring holder		EN 1.4404 (AISI 316L)		
48	Impeller nut		EN 1.4301 (AISI 304) with inox insert	M10	
52-1	Sleeve bearing		Tungsten carbide		
75	O-Ring (priming plug)		EPDM / FPM	Ø12.37x2.62	OR 3050
75-1	O-Ring (drainage plug)		EPDM / FPM		
107	Liner ring		EN 1.4301 (AISI 304) + PPS		
111	Mechanical seal		see pages 6-7		
111-3	Mechanical seal seat		EN 1.4308 (ASTM CF8)		
111-4	Seal holder		EN 1.4301 (AISI 304)		
111-5	Mechanical seal cartridge sleeve		EN 1.4301 (AISI 304)		
115-1	O-Ring (outer casing)		EPDM / FPM	Ø164.46x5.34	OR 6945
115-4	O-Ring (cartridge sleeve)		EPDM / FPM	Ø15.88x2.62	OR 4093
115-5	O-Ring (seal flange)		EPDM / FPM	Ø37.77x2.62	OR 4175
117	Flange gasket		EPDM / FPM		
120-1	Tie-rod		EN 1.4057 (AISI 431)	M12	
120-3	Screw (seal flange)		A2-70	M5x12	ISO 4762
120-6	Screw (pump coupling)	up to 4.0 kW	Galvanized steel 6.8 strenght class ISO 898/1	M6x25	ISO 4762
		from 5.5 kW to 7.5 kW		M8x20	ISO 4762
		above 11 kW		M10x30	ISO 4762
120-11	Screw (counterflange)		A2-70		
120-13	Screw for motor	MEC 80	Galvanized steel 8.8 strength class ISO 898/1	M6x20	ISO 4017
		MEC 90-100-112		M8x20	ISO 4017
		MEC 132		M12x40	ISO 4017
		MEC 160		M16x50	ISO 4017
128-1	Nut (tie rod)		A2-70	M12	ISO 4032
128-3	Nut (motor)	MEC 132	Galvanized steel	M12	ISO 4032
		MEC 160		M16	ISO 4032
128-6	Nut (aluminium coupling)	MEC 71-80-90-100-112	Galvanized steel	M6	ISO 4032
130-1	Set screw		EN 1.4301 (AISI 304)	M5x8	ISO 4026
130-2	Screw for coupling guard		A2-70	M5x6	UNI 7687
131-1	Pin for shaft		Carbon Steel	Ø5x35	ISO 2338
135-1	Washer (tie rod)		EN 1.4301 (AISI 304)	Ø13x24x2.5	ISO 7089
135-6	Washer (aluminium coupling)	up to 4.0 kW	Carbon Steel	Ø6	
137-1	Impeller spacer		EN 1.4301 (AISI 304)		
140	Coupling	up to 4.0 kW	Die cast Aluminium EN AB-AISI11Cu2 (Fe)		
		above 5.5 kW	Cast Iron		
162	Motor bracket		Cast iron EN-GJL-250		
212	Priming plug		EN 1.4301 (AISI 304)	G 3/8	
212-1	Drainage plug		EN 1.4301 (AISI 304)	G 3/8	
212-2	Venting plug		EN 1.4404 (AISI 316L)		
219	Counter flange	flange type: N	Galvanized steel		
		flange type: F	Cast Iron EN-GJL-250		
245	Coupling guard		EN 1.4301 (AISI 304)		
273-1	Washer (drainage plug)		EN 1.4301 (AISI 304)		

EBARA Pumps Europe S.p.A. reserves the right to make changes without prior notice.

QUANTITY FOR MODEL EVMSG15

Pump Type	N°																												
	4	5-1	5-2	5-3	5-4	6	7	21	31***	32-1	43-2	43-3	43-4	43-6	44-1	46	47	48	52-1	75	75-1	107	111	111-3	111-4	111-5	115-1	115-4	115-5
EVMSG15 1/1.1	1	1	/	1	1	1	1	1	1	1	1	1	1	1	1	2	1	1	1	1	4	1	1	1	1	1	2	1	1
EVMSG15 2/2.2	1	1	/	1	1	1	1	2	1	1	1	1	1	/	1	2	1	1	1	1	4	2	1	1	1	1	2	1	1
EVMSG15 3/3.0	1	1	1	1	1	1	1	3	1	1	3	1	1	/	1	2	1	1	1	1	4	3	1	1	1	1	2	1	1
EVMSG15 4/4.0	1	1	2	1	1	1	1	4	1	1	5	1	1	/	1	2	1	1	1	1	4	4	1	1	1	1	2	1	1
EVMSG15 5/5.5	1	1	3	1	1	1	1	5	1	1	7	1	1	/	1	2	1	1	1	1	4	5	1	1	1	1	2	1	1
EVMSG15 6/5.5	1	1	4	1	1	1	1	6	1	1	9	1	1	/	1	2	1	1	1	1	4	6	1	1	1	1	2	1	1
EVMSG15 7/7.5	1	1	4	2	1	1	1	7	1	1	9	2	2	/	2	2	1	1	2	1	4	7	1	1	1	1	2	1	1
EVMSG15 8/7.5	1	1	5	2	1	1	1	8	1	1	11	2	2	/	2	2	1	1	2	1	4	8	1	1	1	1	2	1	1
EVMSG15 9/11	1	1	6	2	1	1	1	9	1	1	13	2	2	/	2	2	1	1	2	1	4	9	1	1	1	1	2	1	1
EVMSG15 10/11	1	1	7	2	1	1	1	10	1	1	15	2	2	/	2	2	1	1	2	1	4	10	1	1	1	1	2	1	1
EVMSG15 11/11	1	1	8	2	1	1	1	11	1	1	17	2	2	/	2	2	1	1	2	1	4	11	1	1	1	1	2	1	1
EVMSG15 12/11	1	1	9	2	1	1	1	12	1	1	19	2	2	/	2	2	1	1	2	1	4	12	1	1	1	1	2	1	1
EVMSG15 13/11	1	1	10	2	1	1	1	13	1	1	21	2	2	/	2	2	1	1	2	1	4	13	1	1	1	1	2	1	1
EVMSG15 15/15	1	1	12	2	1	1	1	15	1	1	25	2	2	/	2	2	1	1	2	1	4	15	1	1	1	1	2	1	1
EVMSG15 17/15	1	1	13	3	1	1	1	17	1	1	27	2	3	/	3	2	1	1	3	1	4	17	1	1	1	1	2	1	1

Pump Type	N°																					
	117*	120-1	120-3	120-6	120-11*	120-13	128-1	128-3	128-6	130-1	130-2	131-1	135-1	135-6	137-1	140	162	212	212-1	212-2	219*	245	273-1
EVMSG15 1/1.1	2	4	4	4	4	4	4	/	4	3	4	1	4	4	1	2	1	1	4	1	2	2	4
EVMSG15 2/2.2	2	4	4	4	4	4	4	/	4	3	4	1	4	4	1	2	1	1	4	1	2	2	4
EVMSG15 3/3.0	2	4	4	4	4	4	4	/	4	3	4	1	4	4	1	2	1	1	4	1	2	2	4
EVMSG15 4/4.0	2	4	4	4	4	4	4	/	4	3	4	1	4	4	1	2	1	1	4	1	2	2	4
EVMSG15 5/5.5	2	4	4	4	4	4	4	4	/	3	4	1	4	/	1	2	1	1	4	1	2	2	4
EVMSG15 6/5.5	2	4	4	4	4	4	4	4	/	3	4	1	4	/	1	2	1	1	4	1	2	2	4
EVMSG15 7/7.5	2	4	4	4	4	4	4	4	/	3	4	1	4	/	1	2	1	1	4	1	2	2	4
EVMSG15 8/7.5	2	4	4	4	4	4	4	4	/	3	4	1	4	/	1	2	1	1	4	1	2	2	4
EVMSG15 9/11	2	4	4	4	4	4	4	4	/	3	4	1	4	/	1	2	1	1	4	1	2	2	4
EVMSG15 10/11	2	4	4	4	4	4	4	4	/	3	4	1	4	/	1	2	1	1	4	1	2	2	4
EVMSG15 11/11	2	4	4	4	4	4	4	4	/	3	4	1	4	/	1	2	1	1	4	1	2	2	4
EVMSG15 12/11	/	4	4	4	/	4	4	4	/	3	4	1	4	/	1	2	1	1	4	1	/	2	4
EVMSG15 13/11	/	4	4	4	/	4	4	4	/	3	4	1	4	/	1	2	1	1	4	1	/	2	4
EVMSG15 15/15	/	4	4	4	/	4	4	4	/	3	4	1	4	/	1	2	1	1	4	1	/	2	4
EVMSG15 17/15	/	4	4	4	/	4	4	4	/	3	4	1	4	/	1	2	1	1	4	1	/	2	4

* only for Oval flange (N)

*** ☐ shaft in EN 1.4462 (AISI 329A)

128-6 / 135-6: with Aluminium coupling (see drawing pag.18)

EBARA Pumps Europe S.p.A. reserves the right to make changes without prior notice.

PERFORMANCE CURVE
EVMS(L)20

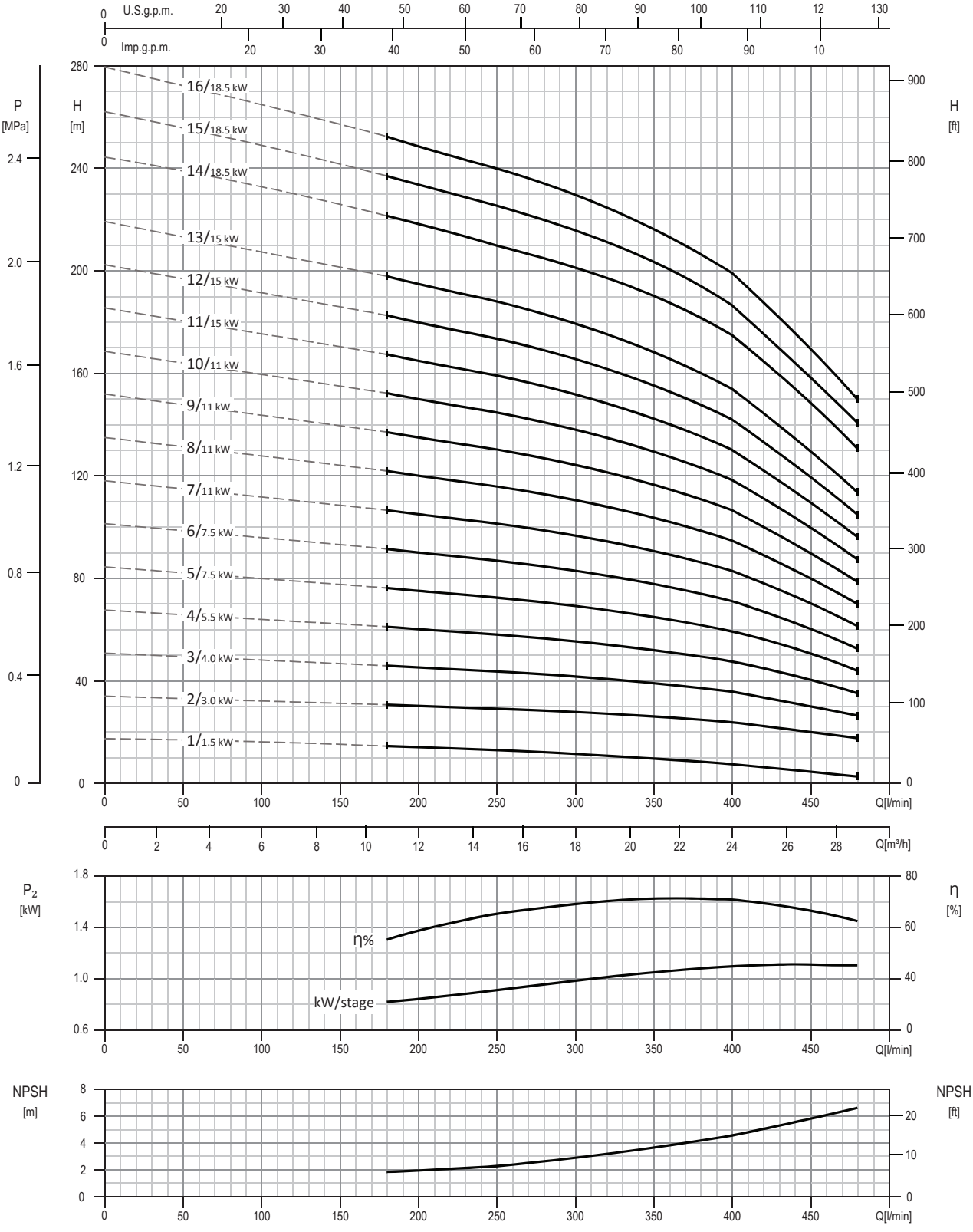

Test standard: ISO 9906:2012 - Grade 3B

EBARA Pumps Europe S.p.A. reserves the right to make changes without prior notice.

TECHNICAL DATA
EVMS(L)20

Dimensional sketch

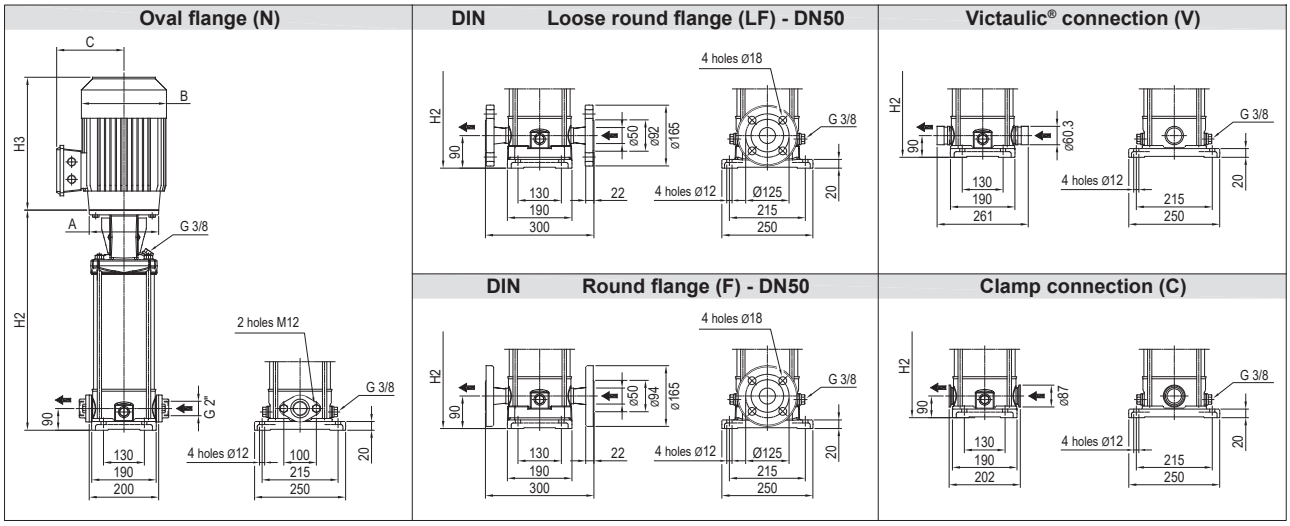

Dimensions [mm] and Weights [Kg]

Pump Type	Pmax [MPa]	Motor kW	Motor Size	Motor A Ø	Motor 1~ B	Motor 1~ C	Motor 3~ B	Motor 3~ C	Oval flange (N) H2	Oval flange (N) H2+H3 1~	Oval flange (N) H2+H3 3~	Oval flange (N) Weight Pump	Oval flange (N) Weight Pump + Motor 1~	Oval flange (N) Weight Pump + Motor 3~	Loose round flange (LF) Round flange (F) H2	Loose round flange (LF) Round flange (F) H2+H3 1~	Loose round flange (LF) Round flange (F) H2+H3 3~	Loose round flange (LF) Round flange (F) Weight Pump	Loose round flange (LF) Round flange (F) Weight Pump + Motor 1~	Loose round flange (LF) Round flange (F) Weight Pump + Motor 3~	Victaulic® connection (V) Clamp connection (C) H2	Victaulic® connection (V) Clamp connection (C) H2+H3 1~	Victaulic® connection (V) Clamp connection (C) H2+H3 3~	Victaulic® connection (V) Clamp connection (C) Weight Pump	Victaulic® connection (V) Clamp connection (C) Weight Pump + Motor 1~	Victaulic® connection (V) Clamp connection (C) Weight Pump + Motor 3~
EVMS(L)20 1/1.5	1.6	1.5	90	140	172	140	160	119	387	665	678	18.2	36.0	31.7	387	665	678	20.0	37.8	33.5	387	665	678	17.1	34.9	30.6
EVMS(L)20 2/3.0	1.6	3.0	100	160	-	-	176	123	397	-	739	18.3	-	40.3	397	-	739	19.1	-	41.1	397	-	739	17.2	-	39.2
EVMS(L)20 3/4.0	1.6	4.0	112	160	-	-	193	138	437	-	801	19.7	-	48.2	437	-	801	20.5	-	49.0	437	-	801	18.6	-	47.1
EVMS(L)20 4/5.5	1.6	5.5	132	300	-	-	220	152	574	-	973	25.6	-	64.6	574	-	973	26.4	-	65.4	574	-	973	24.5	-	63.5
EVMS(L)20 5/7.5	1.6	7.5	132	300	-	-	220	152	614	-	1033	26.9	-	72.9	614	-	1033	27.7	-	73.7	614	-	1033	25.8	-	71.8
EVMS(L)20 6/7.5	1.6	7.5	132	300	-	-	220	152	654	-	1073	28.1	-	74.1	654	-	1073	28.9	-	74.9	654	-	1073	27.0	-	73.0
EVMS(L)20 7/11	1.6	11	160	350	-	-	259	180	724	-	1164	30.4	-	92.9	724	-	1164	31.2	-	93.7	724	-	1164	29.3	-	91.8
EVMS(L)20 8/11	1.6	11	160	350	-	-	259	180	764	-	1204	42.2	-	104.7	764	-	1204	43.0	-	105.5	764	-	1204	41.1	-	103.6
EVMS(L)20 9/11	1.6	11	160	350	-	-	259	180	804	-	1244	43.5	-	106.0	804	-	1244	44.3	-	106.8	804	-	1244	42.4	-	104.9
EVMS(L)20 10/11	2.5	11	160	350	-	-	259	180	-	-	-	-	-	-	844	-	1284	45.7	-	108.2	844	-	1284	43.8	-	106.3
EVMS(L)20 11/15	2.5	15	160	350	-	-	311	240	-	-	-	-	-	-	884	-	1379	47.0	-	148.0	884	-	1379	45.1	-	146.1
EVMS(L)20 12/15	2.5	15	160	350	-	-	311	240	-	-	-	-	-	-	924	-	1419	48.3	-	149.3	924	-	1419	46.4	-	147.4
EVMS(L)20 13/15	2.5	15	160	350	-	-	311	240	-	-	-	-	-	-	964	-	1459	49.6	-	150.6	964	-	1459	47.7	-	148.7
EVMS(L)20 14/18.5	2.5	18.5	160	350	-	-	311	240	-	-	-	-	-	-	1004	-	1499	51.0	-	160.0	1004	-	1499	49.1	-	158.1
EVMS(L)20 15/18.5	2.5	18.5	160	350	-	-	311	240	-	-	-	-	-	-	1044	-	1539	52.3	-	161.3	1044	-	1539	50.4	-	159.4
EVMS(L)20 16/18.5	2.5	18.5	160	350	-	-	311	240	-	-	-	-	-	-	1084	-	1579	53.6	-	162.6	1084	-	1579	51.7	-	160.7

1.6 MPa=16 bar; 2.5 MPa=25 bar
- not available model

EBARA Pumps Europe

EBARA Pumps Europe S.p.A. reserves the right to make changes without prior notice.

SECTIONAL VIEW
EVMS(L)20

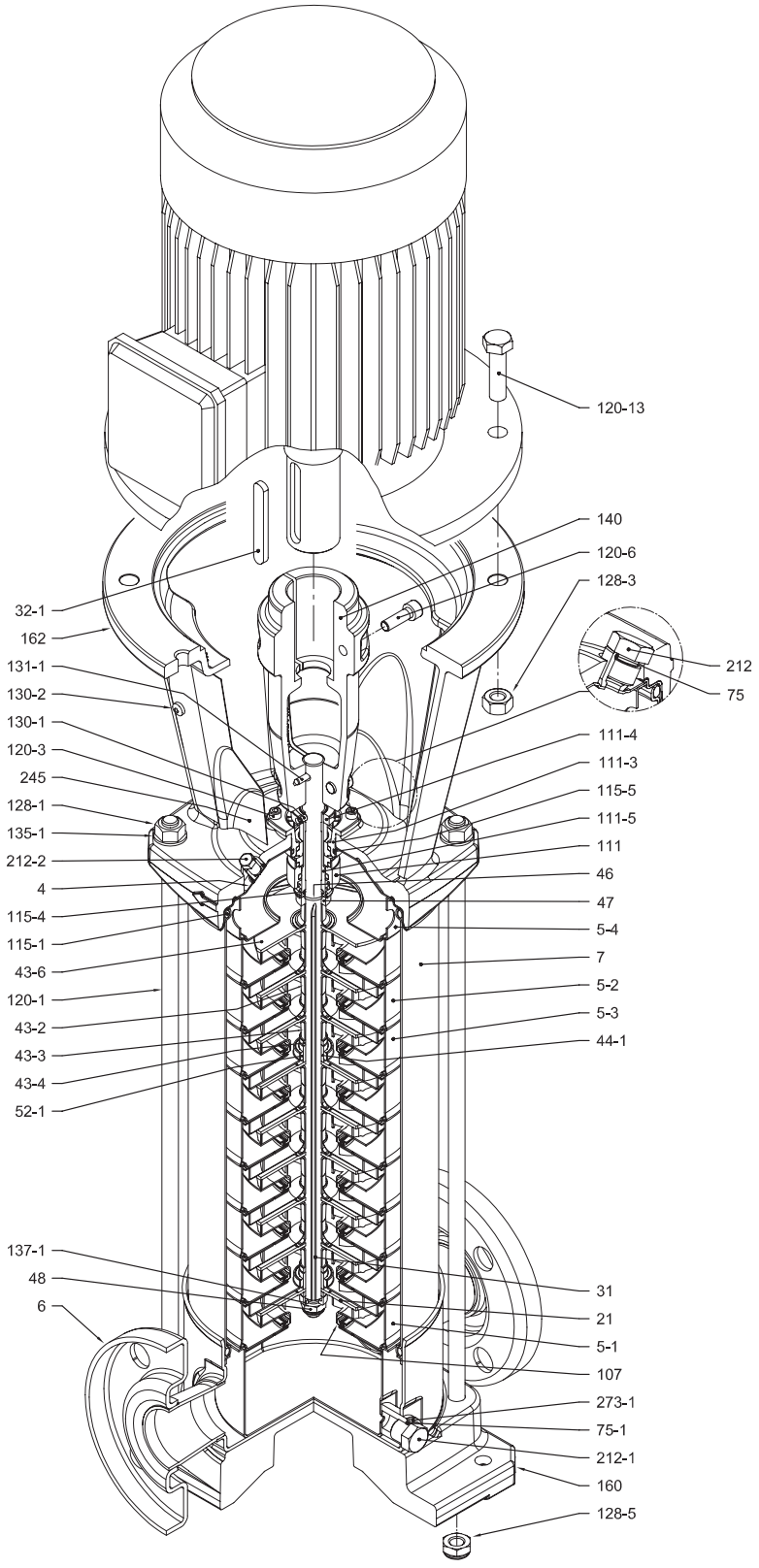

with Round flange (F)

EBARA Pumps Europe S.p.A. reserves the right to make changes without prior notice.

PIPE CONNECTION
EVMS(L)20

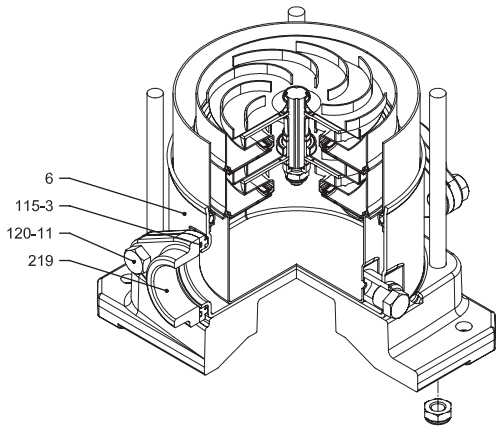

with Oval flange (N)

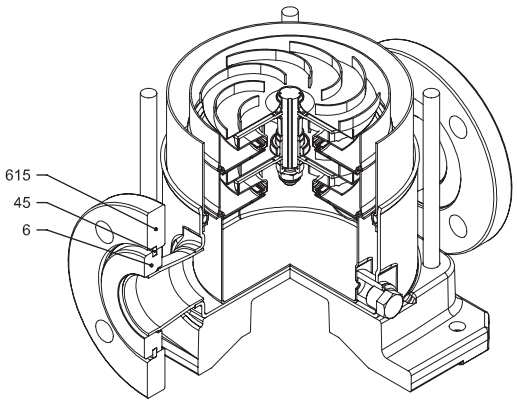

with Loose round flange (LF)

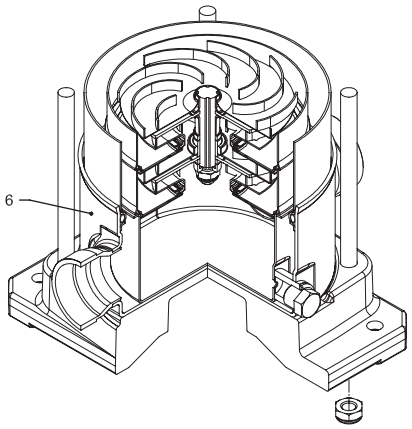

with Victaulic® connection (V)

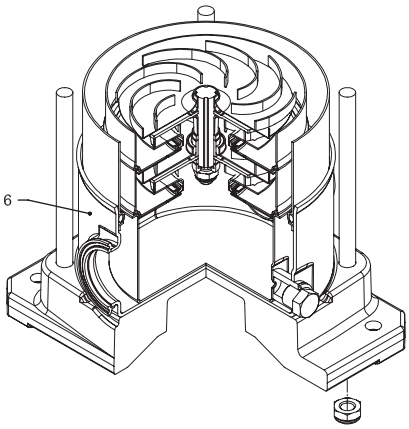

with Clamp connection (C)

EBARA Pumps Europe S.p.A. reserves the right to make changes without prior notice.

SECTIONAL TABLE
EVMS(L)20

N°	PART NAME		MATERIAL		DIMENSIONS	STANDARD
			EVMS	EVMSL		
4	Casing cover		EN 1.4301 (AISI 304)	EN 1.4404 (AISI 316L)		
5-1	Suction casing		EN 1.4301 (AISI 304)	EN 1.4404 (AISI 316L)		
5-2	Intermediate casing		EN 1.4301 (AISI 304)	EN 1.4404 (AISI 316L)		
5-3	Intermediate casing with bearing		EN 1.4301 (AISI 304)	EN 1.4404 (AISI 316L)		
5-4	Discharge casing		EN 1.4301 (AISI 304)	EN 1.4404 (AISI 316L)		
6	Bottom casing		EN 1.4301 (AISI 304)	EN 1.4404 (AISI 316L)		
7	Outer casing		EN 1.4301 (AISI 304)	EN 1.4404 (AISI 316L)		
21	Impeller		EN 1.4301 (AISI 304)	EN 1.4404 (AISI 316L)		
31	Shaft		EN 1.4301 (AISI 304) - EN 1.4462 (AISI 329A)	EN 1.4404 (AISI 316L) - EN 1.4462 (AISI 329A)		
32-1	Adjuster key		EN 1.4301 (AISI 304)			
43-2	Shaft sleeve (intermediate)		EN 1.4301 (AISI 304)	EN 1.4404 (AISI 316L)		
43-3	Shaft sleeve (bearing)		EN 1.4301 (AISI 304)	EN 1.4404 (AISI 316L)		
43-4	Shaft sleeve (adjustment)		EN 1.4301 (AISI 304)	EN 1.4404 (AISI 316L)		
43-6	Washer		EN 1.4404 (AISI 316L)		Ø26x2.5	
44-1	Shaft sleeve bearing		Tungsten carbide			
45	Flange holder		EN 1.4301 (AISI 304)			
46	Ring (mechanical seal)		EN 1.4404 (AISI 316L)			
47	Ring holder		EN 1.4301 (AISI 304)	EN 1.4404 (AISI 316L)		
48	Impeller nut		EN 1.4301 (AISI 304) with inox insert	EN 1.4401 (AISI 316) with inox insert	M10	
52-1	Sleeve bearing		Tungsten carbide			
75	O-Ring (priming plug)		EPDM / FPM		Ø12.37x2.62	OR 3050
75-1	O-Ring (drainage plug)		EPDM / FPM			
107	Liner ring		EN 1.4301 (AISI 304) + PPS	EN 1.4404 (AISI 316L) + PPS		
111	Mechanical seal		see pages 6-7			
111-3	Mechanical seal seat		EN 1.4308 (ASTM CF8)	EN 1.4408 (ASTM CF8M)		
111-4	Seal holder		EN 1.4301 (AISI 304)			
111-5	Mechanical seal cartridge sleeve		EN 1.4301 (AISI 304)	EN 1.4404 (AISI 316L)		
115-1	O-Ring (outer casing)		EPDM / FPM		Ø164.46x5.34	OR 6945
115-3	O-Ring		EPDM / FPM			
115-4	O-Ring (cartridge sleeve)		EPDM / FPM		Ø15.88x2.62	OR 4093
115-5	O-Ring (seal flange)		EPDM / FPM		Ø37.77x2.62	OR 4175
120-1	Tie-rod		EN 1.4057 (AISI 431)		M12	
120-3	Screw (seal flange)		A2-70		M5x12	ISO 4762
120-6	Screw (pump coupling)	up to 4.0 kW	Galvanized steel		M6x25	ISO 4762
		from 5.5 kW to 7.5 kW			M8x20	ISO 4762
		above 11 kW			M10x30	ISO 4762
120-11	Screw (counterflange)		A2-70			
120-13	Screw for motor	MEC 90-100-112	Galvanized steel 8.8 strength class ISO 898/1		M8x20	ISO 4017
		MEC 132			M12x40	ISO 4017
		MEC 160			M16x50	ISO 4017
128-1	Nut (tie rod)		A2-70		M12	ISO 4032
128-3	Nut (motor)	MEC 132	Galvanized steel		M12	ISO 4032
		MEC 160			M16	ISO 4032
128-5	Nut (tie rod)		A2-70		M12	UNI 7474
128-6	Nut (aluminium coupling)	MEC 71-80-90-100-112	Galvanized steel		M6	ISO 4032
130-1	Set screw		EN 1.4301 (AISI 304)		M5x8	ISO 4026
130-2	Screw for coupling guard		A2-70		M5x6	UNI 7687
131-1	Pin for shaft		Carbon Steel		Ø5x35	ISO 2338
135-1	Washer (tie rod)		EN 1.4301 (AISI 304)		Ø13x24x2.5	ISO 7089
135-6	Washer (aluminium coupling)	up to 4.0 kW	Carbon Steel		Ø6	
137-1	Impeller spacer		EN 1.4301 (AISI 304)	EN 1.4404 (AISI 316L)		
140	Coupling	up to 4.0 kW	Die cast Aluminium EN AB-AISI11 Cu2 (Fe)			
		above 5.5 kW	Cast Iron			
160	Base		Die cast Aluminium EN AB-AISI11 Cu2 (Fe)			
162	Motor bracket		Cast iron EN-GJL-250			
212	Priming plug		EN 1.4301 (AISI 304)	EN 1.4404 (AISI 316L)	G 3/8	
212-1	Drainage plug		EN 1.4301 (AISI 304)	EN 1.4404 (AISI 316L)	G 3/8	
212-2	Venting plug		EN 1.4404 (AISI 316L)			
219	Counter flange	flange type: N	EN 1.4308 (ASTM CF8)	EN 1.4408 (ASTM CF8M)		
		flange type: LF-F-V-C	EN 1.4301 (AISI 304)	EN 1.4404 (AISI 316L)		
245	Coupling guard		EN 1.4301 (AISI 304)			
273-1	Washer (drainage plug)		EN 1.4301 (AISI 304)	EN 1.4404 (AISI 316L)		
615	Flange		Carbon Steel			

EBARA Pumps Europe S.p.A. reserves the right to make changes without prior notice.

QUANTITY FOR MODEL EVMS(L)20

Pump Type	N°																													
	4	5-1	5-2	5-3	5-4	6	7	21	31***	32-1	43-2	43-3	43-4	43-6	44-1	45**	46	47	48	52-1	75	75-1	107	111	111-3	111-4	111-5	115-1	115-3*	115-4	115-5
EVMS(L)20 1/1.5	1	1	/	1	1	1	1	1	1	1	1	1	1	1	1	4	2	1	1	1	1	2	1	1	1	1	1	2	2	1	1
EVMS(L)20 2/3.0	1	1	/	1	1	1	1	2	1	1	1	1	1	/	1	4	2	1	1	1	1	2	2	1	1	1	1	2	2	1	1
EVMS(L)20 3/4.0	1	1	1	1	1	1	1	3	1	1	3	1	1	/	1	4	2	1	1	1	1	2	3	1	1	1	1	2	2	1	1
EVMS(L)20 4/5.5	1	1	2	1	1	1	1	4	1	1	5	1	1	/	1	4	2	1	1	1	1	2	4	1	1	1	1	2	2	1	1
EVMS(L)20 5/7.5	1	1	3	1	1	1	1	5	1	1	7	1	1	/	1	4	2	1	1	1	1	2	5	1	1	1	1	2	2	1	1
EVMS(L)20 6/7.5	1	1	4	1	1	1	1	6	1	1	9	1	1	/	1	4	2	1	1	1	1	2	6	1	1	1	1	2	2	1	1
EVMS(L)20 7/11	1	1	4	2	1	1	1	7	1	1	9	2	2	/	2	4	2	1	1	2	1	2	7	1	1	1	1	2	2	1	1
EVMS(L)20 8/11	1	1	5	2	1	1	1	8	1	1	11	2	2	/	2	4	2	1	1	2	1	2	8	1	1	1	1	2	2	1	1
EVMS(L)20 9/11	1	1	6	2	1	1	1	9	1	1	13	2	2	/	2	4	2	1	1	2	1	2	9	1	1	1	1	2	2	1	1
EVMS(L)20 10/11	1	1	7	2	1	1	1	10	1	1	15	2	2	/	2	4	2	1	1	2	1	2	10	1	1	1	1	2	/	1	1
EVMS(L)20 11/15	1	1	8	2	1	1	1	11	1	1	17	2	2	/	2	4	2	1	1	2	1	2	11	1	1	1	1	2	/	1	1
EVMS(L)20 12/15	1	1	9	2	1	1	1	12	1	1	19	2	2	/	2	4	2	1	1	2	1	2	12	1	1	1	1	2	/	1	1
EVMS(L)20 13/15	1	1	10	2	1	1	1	13	1	1	21	2	2	/	2	4	2	1	1	2	1	2	13	1	1	1	1	2	/	1	1
EVMS(L)20 14/18.5	1	1	11	2	1	1	1	14	1	1	23	2	2	/	2	4	2	1	1	2	1	2	14	1	1	1	1	2	/	1	1
EVMS(L)20 15/18.5	1	1	12	2	1	1	1	15	1	1	25	2	2	/	2	4	2	1	1	2	1	2	15	1	1	1	1	2	/	1	1
EVMS(L)20 16/18.5	1	1	13	2	1	1	1	16	1	1	27	2	2	/	2	4	2	1	1	2	1	2	16	1	1	1	1	2	/	1	1

Pump Type	N°																										
	120-1	120-3	120-6	120-11*	120-13	128-1	128-3	128-5	128-6	130-1	130-2	131-1	135-1	135-6	137-1	140	160	162	212	212-1	212-2	219*	245	273-1	615**
EVMS(L)20 1/1.5	4	4	4	4	4	4	/	4	4	3	4	1	4	4	1	2	1	1	1	2	1	2	2	2	2
EVMS(L)20 2/3.0	4	4	4	4	4	4	/	4	4	3	4	1	4	4	1	2	1	1	1	2	1	2	2	2	2
EVMS(L)20 3/4.0	4	4	4	4	4	4	/	4	4	3	4	1	4	4	1	2	1	1	1	2	1	2	2	2	2
EVMS(L)20 4/5.5	4	4	4	4	4	4	4	4	/	3	4	1	4	/	1	2	1	1	1	2	1	2	2	2	2
EVMS(L)20 5/7.5	4	4	4	4	4	4	4	4	/	3	4	1	4	/	1	2	1	1	1	2	1	2	2	2	2
EVMS(L)20 6/7.5	4	4	4	4	4	4	4	4	/	3	4	1	4	/	1	2	1	1	1	2	1	2	2	2	2
EVMS(L)20 7/11	4	4	4	4	4	4	4	4	/	3	4	1	4	/	1	2	1	1	1	2	1	2	2	2	2
EVMS(L)20 8/11	4	4	4	4	4	4	4	4	/	3	4	1	4	/	1	2	1	1	1	2	1	2	2	2	2
EVMS(L)20 9/11	4	4	4	4	4	4	4	4	/	3	4	1	4	/	1	2	1	1	1	2	1	2	2	2	2
EVMS(L)20 10/11	4	4	4	/	4	4	4	4	/	3	4	1	4	/	1	2	1	1	1	2	1	/	2	2	2
EVMS(L)20 11/15	4	4	4	/	4	4	4	4	/	3	4	1	4	/	1	2	1	1	1	2	1	/	2	2	2
EVMS(L)20 12/15	4	4	4	/	4	4	4	4	/	3	4	1	4	/	1	2	1	1	1	2	1	/	2	2	2
EVMS(L)20 13/15	4	4	4	/	4	4	4	4	/	3	4	1	4	/	1	2	1	1	1	2	1	/	2	2	2
EVMS(L)20 14/18.5	4	4	4	/	4	4	4	4	/	3	4	1	4	/	1	2	1	1	1	2	1	/	2	2	2
EVMS(L)20 15/18.5	4	4	4	/	4	4	4	4	/	3	4	1	4	/	1	2	1	1	1	2	1	/	2	2	2
EVMS(L)20 16/18.5	4	4	4	/	4	4	4	4	/	3	4	1	4	/	1	2	1	1	1	2	1	/	2	2	2

* only for Oval flange (N)

** only for Loose round flange (LF)

*** ☐ shaft in EN 1.4462 (AISI 329A)

128-6 / 135-6: with Aluminium coupling (see drawing pag.18)

EBARA Pumps Europe S.p.A. reserves the right to make changes without prior notice.

PERFORMANCE CURVE
EVMSG20

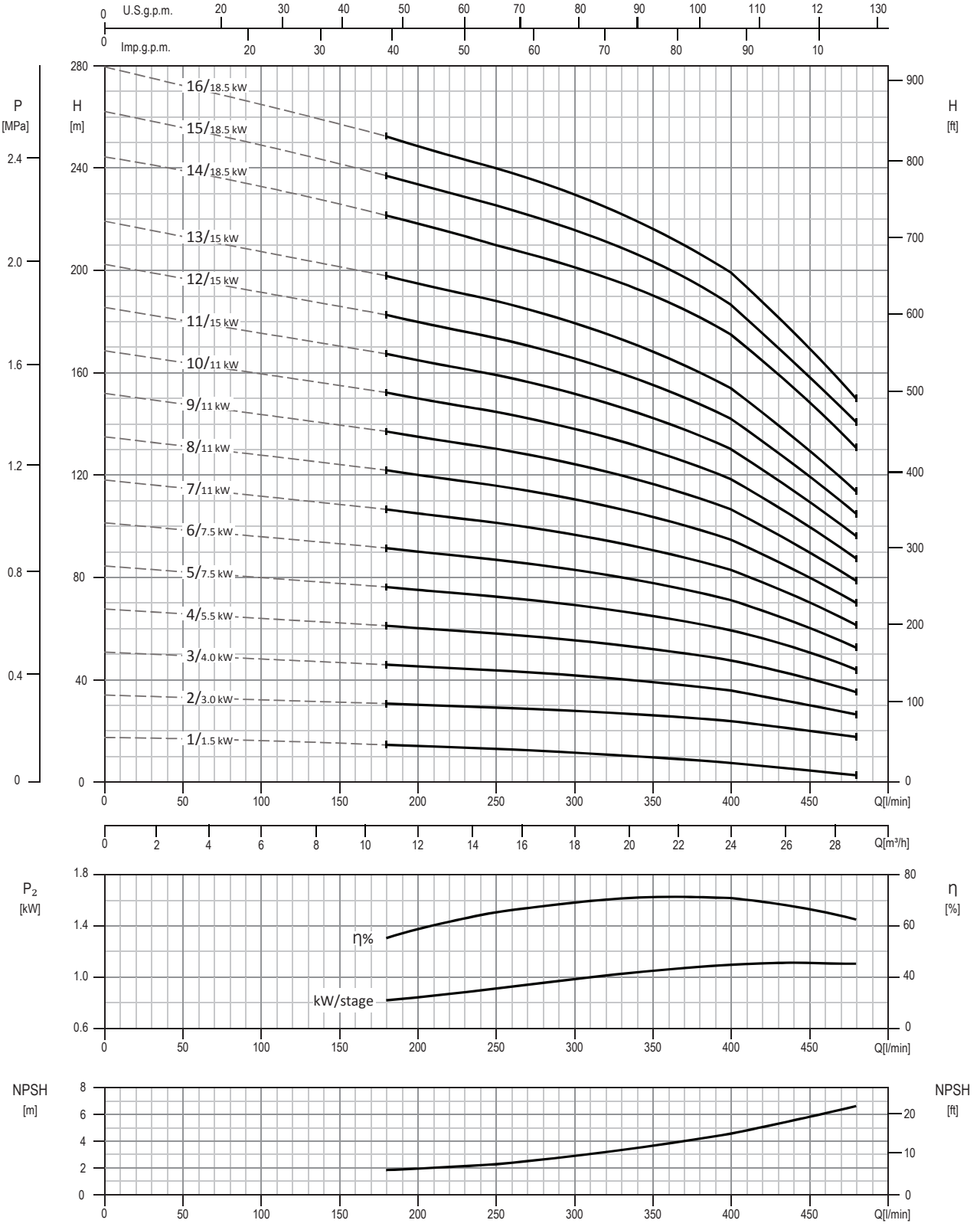

Test standard: ISO 9906:2012 - Grade 3B

EBARA Pumps Europe

EBARA Pumps Europe S.p.A. reserves the right to make changes without prior notice.

TECHNICAL DATA
EVMSG20

Dimensional sketch

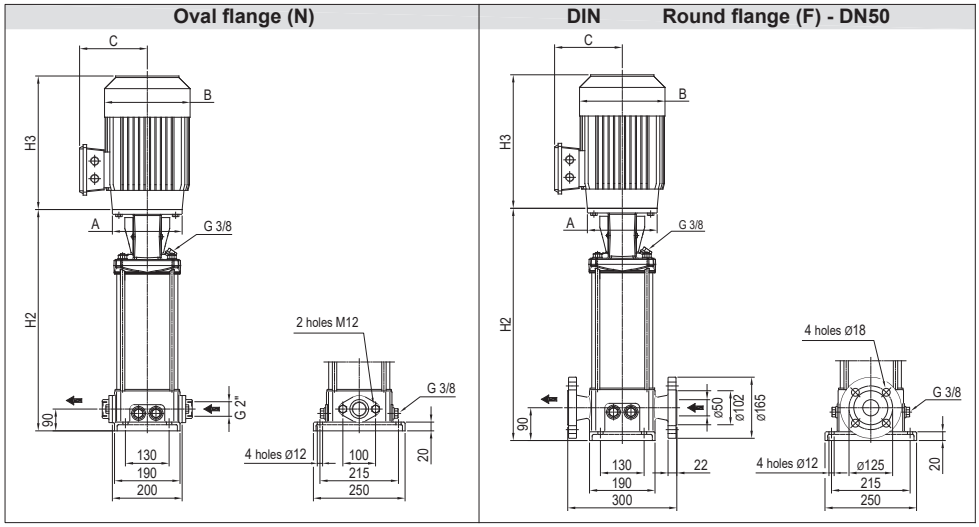

Dimensions [mm] and Weights [Kg]

Pump Type	Pmax [MPa]	Motor kW	Size	A Ø	1~ B	1~ C	3 ~ B	3 ~ C	Oval flange (N) H2	H2+H3 1 ~	H2+H3 3 ~	Weight Pump	Weight Pump + Motor 1 ~	Weight Pump + Motor 3 ~	Round flange (F) H2	H2+H3 1 ~	H2+H3 3 ~	Weight Pump	Weight Pump + Motor 1 ~	Weight Pump + Motor 3 ~
EVMSG20 1/1.5	1.6	1.5	90	140	172	140	160	119	387	665	678	22.6	40.4	36.1	387	665	678	27.2	45	40.7
EVMSG20 2/3.0	1.6	3.0	100	160	-	-	176	123	397	-	739	22.7	-	44.7	397	-	739	27.3	-	49.3
EVMSG20 3/4.0	1.6	4.0	112	160	-	-	193	138	437	-	801	24.1	-	52.6	437	-	801	28.7	-	57.2
EVMSG20 4/5.5	1.6	5.5	132	300	-	-	220	152	574	-	973	30.0	-	69.0	574	-	973	34.6	-	73.6
EVMSG20 5/7.5	1.6	7.5	132	300	-	-	220	152	614	-	1033	31.2	-	77.2	614	-	1033	35.9	-	81.9
EVMSG20 6/7.5	1.6	7.5	132	300	-	-	220	152	654	-	1073	32.5	-	78.5	654	-	1073	37.1	-	83.1
EVMSG20 7/11	1.6	11	160	350	-	-	259	180	724	-	1164	34.8	-	97.3	724	-	1164	39.4	-	101.9
EVMSG20 8/11	1.6	11	160	350	-	-	259	180	764	-	1204	46.6	-	109.1	764	-	1204	51.2	-	113.7
EVMSG20 9/11	1.6	11	160	350	-	-	259	180	804	-	1244	47.9	-	110.4	804	-	1244	52.5	-	115.0
EVMSG20 10/11	2.5	11	160	350	-	-	259	180	-	-	-	-	-	-	844	-	1284	53.9	-	116.4
EVMSG20 11/15	2.5	15	160	350	-	-	311	240	-	-	-	-	-	-	884	-	1379	55.2	-	156.2
EVMSG20 12/15	2.5	15	160	350	-	-	311	240	-	-	-	-	-	-	924	-	1419	56.5	-	157.5
EVMSG20 13/15	2.5	15	160	350	-	-	311	240	-	-	-	-	-	-	964	-	1459	57.9	-	158.9
EVMSG20 14/18.5	2.5	18.5	160	350	-	-	311	240	-	-	-	-	-	-	1004	-	1499	59.2	-	168.2
EVMSG20 15/18.5	2.5	18.5	160	350	-	-	311	240	-	-	-	-	-	-	1044	-	1539	60.5	-	169.5
EVMSG20 16/18.5	2.5	18.5	160	350	-	-	311	240	-	-	-	-	-	-	1084	-	1579	61.8	-	170.8

1.6 MPa=16 bar; 2.5 MPa=25 bar
- not available model

EBARA Pumps Europe S.p.A. reserves the right to make changes without prior notice.

SECTIONAL VIEW
EVMSG20

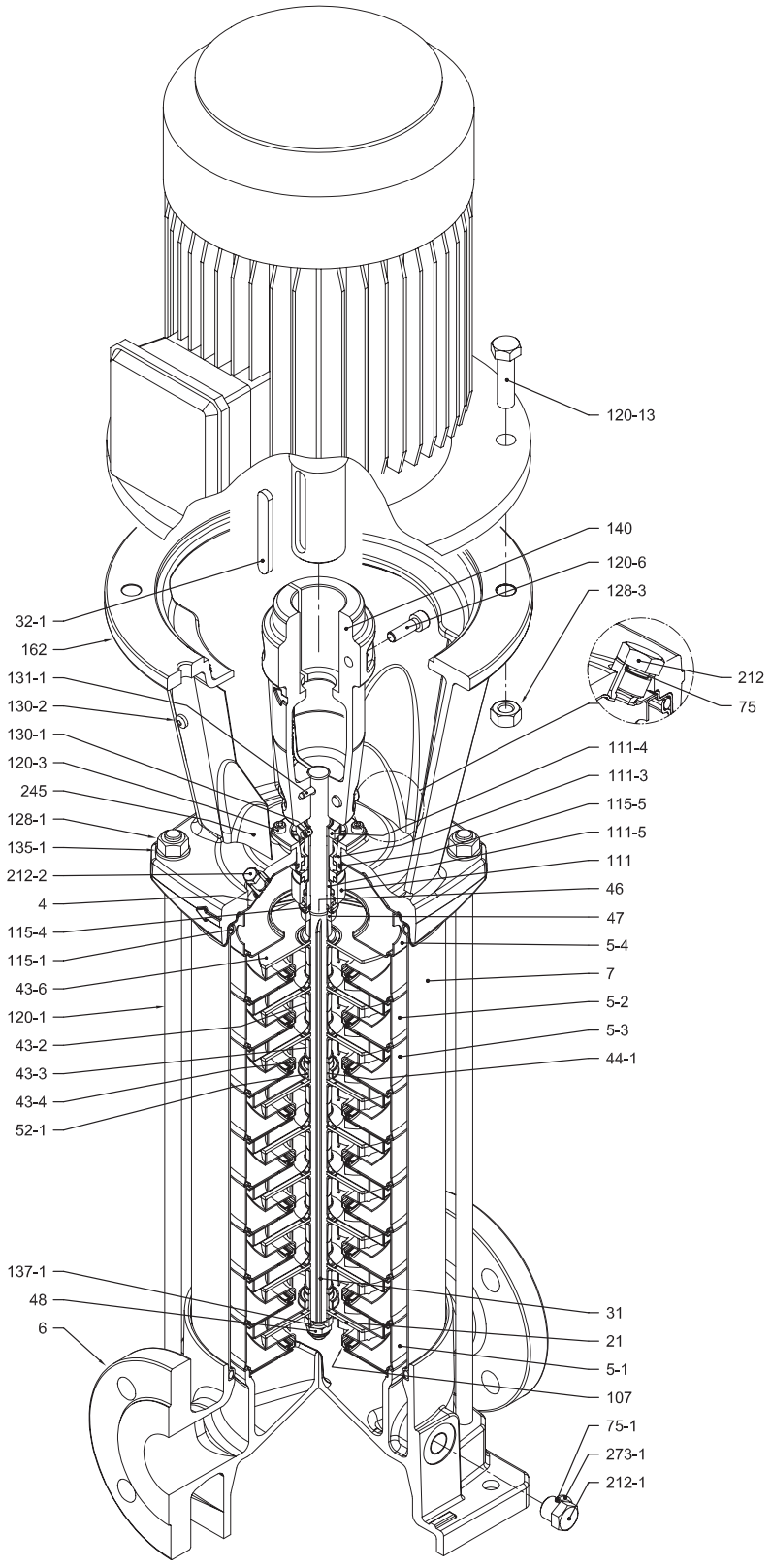

with Round flange (F)

EBARA Pumps Europe S.p.A. reserves the right to make changes without prior notice.

PIPE CONNECTION
EVMSG20

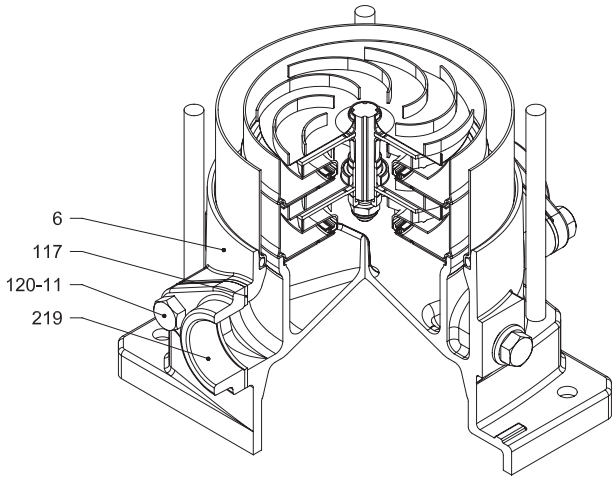

with Oval flange (N)

EBARA Pumps Europe S.p.A. reserves the right to make changes without prior notice.

SECTIONAL TABLE
EVMSG20

N°	PART NAME		MATERIAL EVMSG	DIMENSIONS	STANDARD
4	Casing cover		EN 1.4301 (AISI 304)		
5-1	Suction casing		EN 1.4301 (AISI 304)		
5-2	Intermediate casing		EN 1.4301 (AISI 304)		
5-3	Intermediate casing with bearing		EN 1.4301 (AISI 304)		
5-4	Discharge casing		EN 1.4301 (AISI 304)		
6	Bottom casing		Cast Iron EN-GJL-250		
7	Outer casing		EN 1.4301 (AISI 304)		
21	Impeller		EN 1.4301 (AISI 304)		
31	Shaft		EN 1.4301 (AISI 304) - EN 1.4462 (AISI 329A)		
32-1	Adjuster key		EN 1.4301 (AISI 304)		
43-2	Shaft sleeve (intermediate)		EN 1.4301 (AISI 304)		
43-3	Shaft sleeve (bearing)		EN 1.4301 (AISI 304)		
43-4	Shaft sleeve (adjustment)		EN 1.4301 (AISI 304)		
43-6	Washer		EN 1.4404 (AISI 316L)	Ø26x2.5	
44-1	Shaft sleeve bearing		Tungsten carbide		
46	Ring (mechanical seal)		EN 1.4404 (AISI 316L)		
47	Ring holder		EN 1.4404 (AISI 316L)		
48	Impeller nut		EN 1.4301 (AISI 304) with inox insert	M10	
52-1	Sleeve bearing		Tungsten carbide		
75	O-Ring (priming plug)		EPDM / FPM	Ø12.37x2.62	OR 3050
75-1	O-Ring (drainage plug)		EPDM / FPM		
107	Liner ring		EN 1.4301 (AISI 304) + PPS		
111	Mechanical seal		see pages 6-7		
111-3	Mechanical seal seat		EN 1.4308 (ASTM CF8)		
111-4	Seal holder		EN 1.4301 (AISI 304)		
111-5	Mechanical seal cartridge sleeve		EN 1.4301 (AISI 304)		
115-1	O-Ring (outer casing)		EPDM / FPM	Ø164.46x5.34	OR 6945
115-4	O-Ring (cartridge sleeve)		EPDM / FPM	Ø15.88x2.62	OR 4093
115-5	O-Ring (seal flange)		EPDM / FPM	Ø37.77x2.62	OR 4175
117	Flange gasket		EPDM / FPM		
120-1	Tie-rod		EN 1.4057 (AISI 431)	M12	
120-3	Screw (seal flange)		A2-70	M5x12	ISO 4762
120-6	Screw (pump coupling)	up to 4.0 kW	Galvanized steel 6.8 strenght class ISO 898/1	M6x25	ISO 4762
		from 5.5 kW to 7.5 kW		M8x20	ISO 4762
		above 11 kW		M10x30	ISO 4762
120-11	Screw (counterflange)		A2-70		
120-13	Screw for motor	MEC 90-100-112	Galvanized steel 8.8 strength class ISO 898/1	M8x20	ISO 4017
		MEC 132		M12x40	ISO 4017
		MEC 160		M16x50	ISO 4017
128-1	Nut (tie rod)		A2-70	M12	ISO 4032
128-3	Nut (motor)	MEC 132	Galvanized steel	M12	ISO 4032
		MEC 160		M16	ISO 4032
128-6	Nut (aluminium coupling)	MEC 71-80-90-100-112	Galvanized steel	M6	ISO 4032
130-1	Set screw		EN 1.4301 (AISI 304)	M5x8	ISO 4026
130-2	Screw for coupling guard		A2-70	M5x6	UNI 7687
131-1	Pin for shaft		Carbon Steel	Ø5x35	ISO 2338
135-1	Washer (tie rod)		EN 1.4301 (AISI 304)	Ø13x24x2.5	ISO 7089
135-6	Washer (aluminium coupling)	up to 4.0 kW	Carbon Steel	Ø6	
137-1	Impeller spacer		EN 1.4301 (AISI 304)		
140	Coupling	up to 4.0 kW	Die cast Aluminium EN AB-AISI11Cu2 (Fe)		
		above 5.5 kW	Cast Iron		
162	Motor bracket		Cast iron EN-GJL-250		
212	Priming plug		EN 1.4301 (AISI 304)	G 3/8	
212-1	Drainage plug		EN 1.4301 (AISI 304)	G 3/8	
212-2	Venting plug		EN 1.4404 (AISI 316L)		
219	Counter flange	flange type: N	Galvanized steel		
		flange type: F	Cast Iron EN-GJL-250		
245	Coupling guard		EN 1.4301 (AISI 304)		
273-1	Washer (drainage plug)		EN 1.4301 (AISI 304)		

EBARA Pumps Europe S.p.A. reserves the right to make changes without prior notice.

QUANTITY FOR MODEL EVMSG20

Pump Type	N°																											
	4	5-1	5-2	5-3	5-4	6	7	21	31***	32-1	43-2	43-3	43-4	43-6	44-1	46	47	48	52-1	75	75-1	107	111	111-3	111-4	111-5	115-1	115-4	115-5
EVMSG20 1/1.5	1	1	/	1	1	1	1	1	1	1	1	1	1	1	1	2	1	1	1	1	4	1	1	1	1	1	2	1	1
EVMSG20 2/3.0	1	1	/	1	1	1	1	2	1	1	1	1	1	/	1	2	1	1	1	1	4	2	1	1	1	1	2	1	1
EVMSG20 3/4.0	1	1	1	1	1	1	1	3	1	1	3	1	1	/	1	2	1	1	1	1	4	3	1	1	1	1	2	1	1
EVMSG20 4/5.5	1	1	2	1	1	1	1	4	1	1	5	1	1	/	1	2	1	1	1	1	4	4	1	1	1	1	2	1	1
EVMSG20 5/7.5	1	1	3	1	1	1	1	5	1	1	7	1	1	/	1	2	1	1	1	1	4	5	1	1	1	1	2	1	1
EVMSG20 6/7.5	1	1	4	1	1	1	1	6	1	1	9	1	1	/	1	2	1	1	1	1	4	6	1	1	1	1	2	1	1
EVMSG20 7/11	1	1	4	2	1	1	1	7	1	1	9	2	2	/	2	2	1	1	2	1	4	7	1	1	1	1	2	1	1
EVMSG20 8/11	1	1	5	2	1	1	1	8	1	1	11	2	2	/	2	2	1	1	2	1	4	8	1	1	1	1	2	1	1
EVMSG20 9/11	1	1	6	2	1	1	1	9	1	1	13	2	2	/	2	2	1	1	2	1	4	9	1	1	1	1	2	1	1
EVMSG20 10/11	1	1	7	2	1	1	1	10	1	1	15	2	2	/	2	2	1	1	2	1	4	10	1	1	1	1	2	1	1
EVMSG20 11/15	1	1	8	2	1	1	1	11	1	1	17	2	2	/	2	2	1	1	2	1	4	11	1	1	1	1	2	1	1
EVMSG20 12/15	1	1	9	2	1	1	1	12	1	1	19	2	2	/	2	2	1	1	2	1	4	12	1	1	1	1	2	1	1
EVMSG20 13/15	1	1	10	2	1	1	1	13	1	1	21	2	2	/	2	2	1	1	2	1	4	13	1	1	1	1	2	1	1
EVMSG20 14/18.5	1	1	11	2	1	1	1	14	1	1	23	2	2	/	2	2	1	1	2	1	4	14	1	1	1	1	2	1	1
EVMSG20 15/18.5	1	1	12	2	1	1	1	15	1	1	25	2	2	/	2	2	1	1	2	1	4	15	1	1	1	1	2	1	1
EVMSG20 16/18.5	1	1	13	2	1	1	1	16	1	1	27	2	2	/	2	2	1	1	2	1	4	16	1	1	1	1	2	1	1

Pump Type	N°																							
	117*	120-1	120-3	120-6	120-11*	120-13	128-1	128-3	128-6	130-1	130-2	131-1	135-1	135-6	137-1	140	162	212	212-1	212-2	219*	245	273-1
EVMSG20 1/1.5	2	4	4	4	4	4	4	/	4	3	4	1	4	4	1	2	1	1	4	1	2	2	4
EVMSG20 2/3.0	2	4	4	4	4	4	4	/	4	3	4	1	4	4	1	2	1	1	4	1	2	2	4
EVMSG20 3/4.0	2	4	4	4	4	4	4	/	4	3	4	1	4	4	1	2	1	1	4	1	2	2	4
EVMSG20 4/5.5	2	4	4	4	4	4	4	4	/	3	4	1	4	/	1	2	1	1	4	1	2	2	4
EVMSG20 5/7.5	2	4	4	4	4	4	4	4	/	3	4	1	4	/	1	2	1	1	4	1	2	2	4
EVMSG20 6/7.5	2	4	4	4	4	4	4	4	/	3	4	1	4	/	1	2	1	1	4	1	2	2	4
EVMSG20 7/11	2	4	4	4	4	4	4	4	/	3	4	1	4	/	1	2	1	1	4	1	2	2	4
EVMSG20 8/11	2	4	4	4	4	4	4	4	/	3	4	1	4	/	1	2	1	1	4	1	2	2	4
EVMSG20 9/11	2	4	4	4	4	4	4	4	/	3	4	1	4	/	1	2	1	1	4	1	2	2	4
EVMSG20 10/11	/	4	4	4	/	4	4	4	/	3	4	1	4	/	1	2	1	1	4	1	/	2	4
EVMSG20 11/15	/	4	4	4	/	4	4	4	/	3	4	1	4	/	1	2	1	1	4	1	/	2	4
EVMSG20 12/15	/	4	4	4	/	4	4	4	/	3	4	1	4	/	1	2	1	1	4	1	/	2	4
EVMSG20 13/15	/	4	4	4	/	4	4	4	/	3	4	1	4	/	1	2	1	1	4	1	/	2	4
EVMSG20 14/18.5	/	4	4	4	/	4	4	4	/	3	4	1	4	/	1	2	1	1	4	1	/	2	4
EVMSG20 15/18.5	/	4	4	4	/	4	4	4	/	3	4	1	4	/	1	2	1	1	4	1	/	2	4
EVMSG20 16/18.5	/	4	4	4	/	4	4	4	/	3	4	1	4	/	1	2	1	1	4	1	/	2	4

* only for Oval flange (N)

*** ☐ shaft in EN 1.4462 (AISI 329A)

128-6 / 135-6: with Aluminium coupling (see drawing pag.18)

EBARA Pumps Europe S.p.A. reserves the right to make changes without prior notice.

PERFORMANCE CURVE
EVMS(L)32

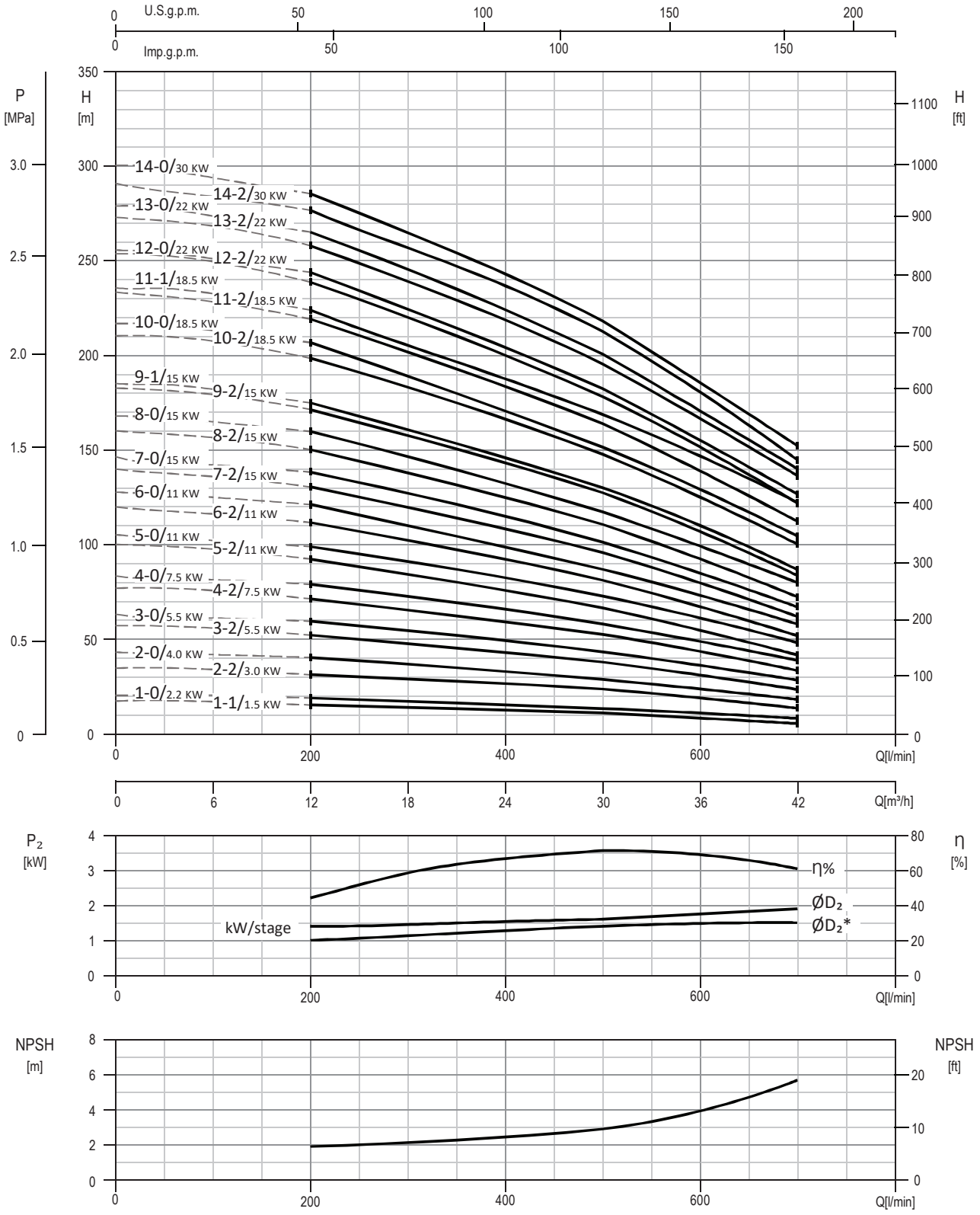

Test standard: ISO 9906:2012 - Grade 3B

EBARA Pumps Europe S.p.A. reserves the right to make changes without prior notice.

TECHNICAL DATA
EVMS(L)32

Dimensional sketch

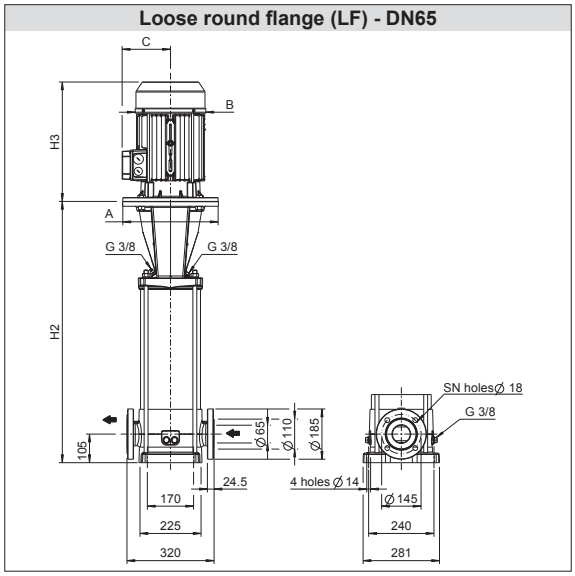

Dimensions [mm] and Weights [Kg]

Pump Type	Pmax [MPa]	Motor					Loose round flange (LF)				
		kW	Size	A Ø	B	C	H2	H2+H3	SN	Weight Pump	Weight Pump + Motor
EVMS(L)32 1-1/1.5	1.6	1.5	90	140	160	119	451	741	4	48.6	62.1
EVMS(L)32 1-0/2.2	1.6	2.2	90	140	160	119	451	741	4	48.6	63.6
EVMS(L)32 2-2/3.0	1.6	3.0	100	160	176	123	531	873	4	51.9	73.9
EVMS(L)32 2-0/4.0	1.6	4.0	112	160	193	138	531	896	4	51.9	80.4
EVMS(L)32 3-2/5.5	1.6	5.5	132	300	220	152	705	1105	4	65.8	104.8
EVMS(L)32 3-0/5.5	1.6	5.5	132	300	220	152	705	1105	4	65.8	104.8
EVMS(L)32 4-2/7.5	1.6	7.5	132	300	220	152	775	1195	4	69.0	115.0
EVMS(L)32 4-0/7.5	1.6	7.5	132	300	220	152	775	1195	4	69.0	115.0
EVMS(L)32 5-2/11	1.6	11	160	350	259	180	875	1314	4	79.0	141.5
EVMS(L)32 5-0/11	1.6	11	160	350	259	180	875	1314	4	79.0	141.5
EVMS(L)32 6-2/11	1.6	11	160	350	259	180	945	1384	4	82.3	144.8
EVMS(L)32 6-0/11	1.6	11	160	350	259	180	945	1384	4	82.3	144.8
EVMS(L)32 7-2/15	1.6	15	160	350	311	240	1015	1510	4	85.6	186.6
EVMS(L)32 7-0/15	1.6	15	160	350	311	240	1015	1510	4	85.6	186.6
EVMS(L)32 8-2/15	2.5	15	160	350	311	240	1085	1580	8	90.4	191.4
EVMS(L)32 8-0/15	2.5	15	160	350	311	240	1085	1580	8	90.4	191.4
EVMS(L)32 9-2/15	2.5	15	160	350	311	240	1155	1650	8	93.9	194.9
EVMS(L)32 9-1/15	2.5	15	160	350	311	240	1155	1650	8	93.9	194.9
EVMS(L)32 10-2/18.5	2.5	18.5	160	350	311	240	1225	1720	8	97.3	206.3
EVMS(L)32 10-0/18.5	2.5	18.5	160	350	311	240	1225	1720	8	97.3	206.3
EVMS(L)32 11-2/18.5	2.5	18.5	160	350	311	240	1295	1847	8	100.8	209.8
EVMS(L)32 11-1/18.5	2.5	18.5	160	350	311	240	1295	1847	8	100.8	209.8
EVMS(L)32 12-2/22	3.0	22	180	350	354	260	1365	1917	8	106.8	241.8
EVMS(L)32 12-0/22	3.0	22	180	350	354	260	1365	1917	8	106.8	241.8
EVMS(L)32 13-2/22	3.0	22	180	350	354	260	1435	1987	8	110.6	245.6
EVMS(L)32 13-0/22	3.0	22	180	350	354	260	1435	1987	8	110.6	245.6
EVMS(L)32 14-2/30	3.0	30	200	400	354	280	1505	2057	8	119.5	287.5
EVMS(L)32 14-0/30	3.0	30	200	400	354	280	1505	2057	8	119.5	287.5

1.6 MPa=16 bar; 2.5 MPa=25 bar; 3.0 MPa=30 bar

EBARA Pumps Europe S.p.A. reserves the right to make changes without prior notice.

SECTIONAL VIEW
EVMS(L)32

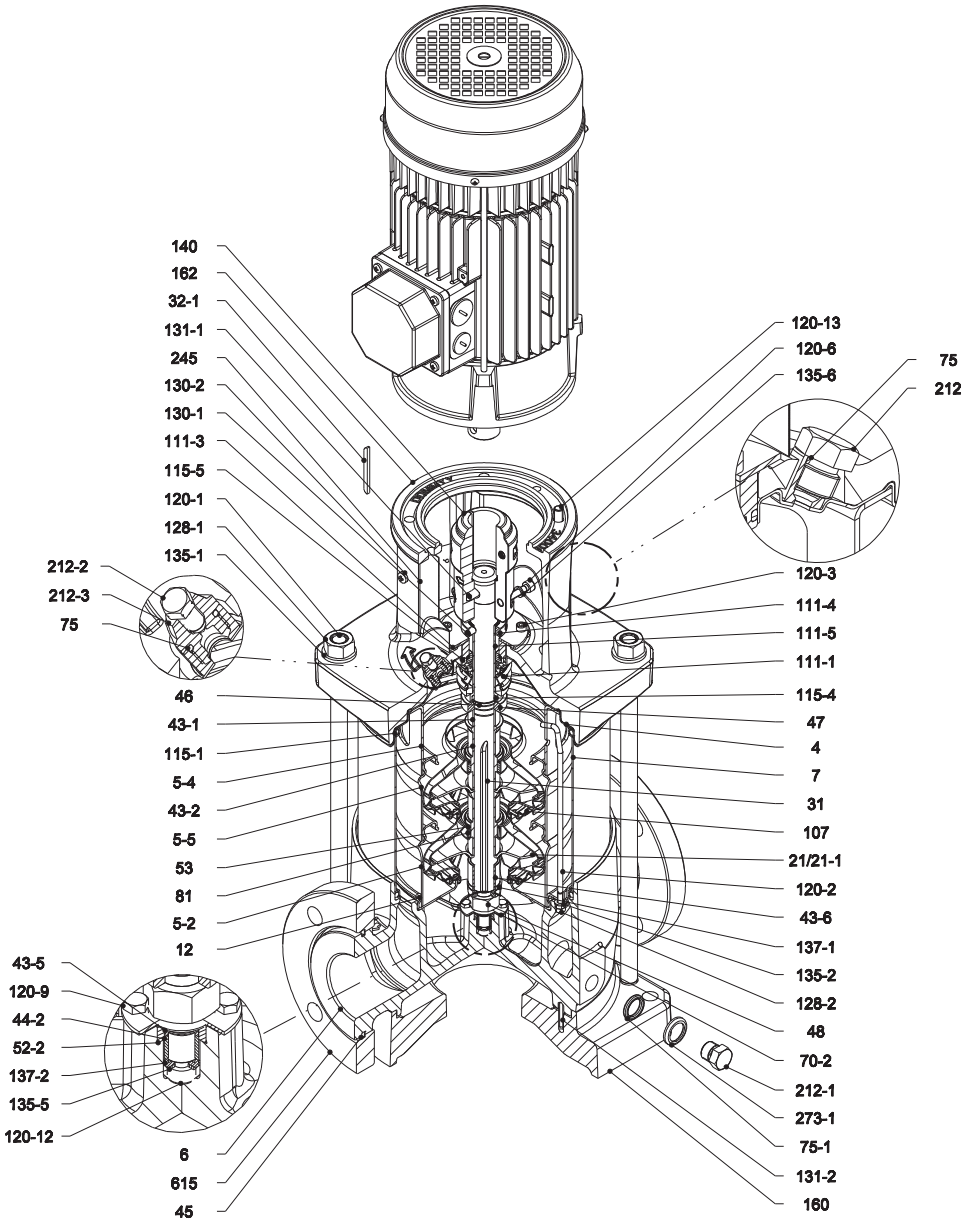

Pump without ball bearing
up to 4.0 kW

EBARA Pumps Europe S.p.A. reserves the right to make changes without prior notice.

SECTIONAL VIEW
EVMS(L)32

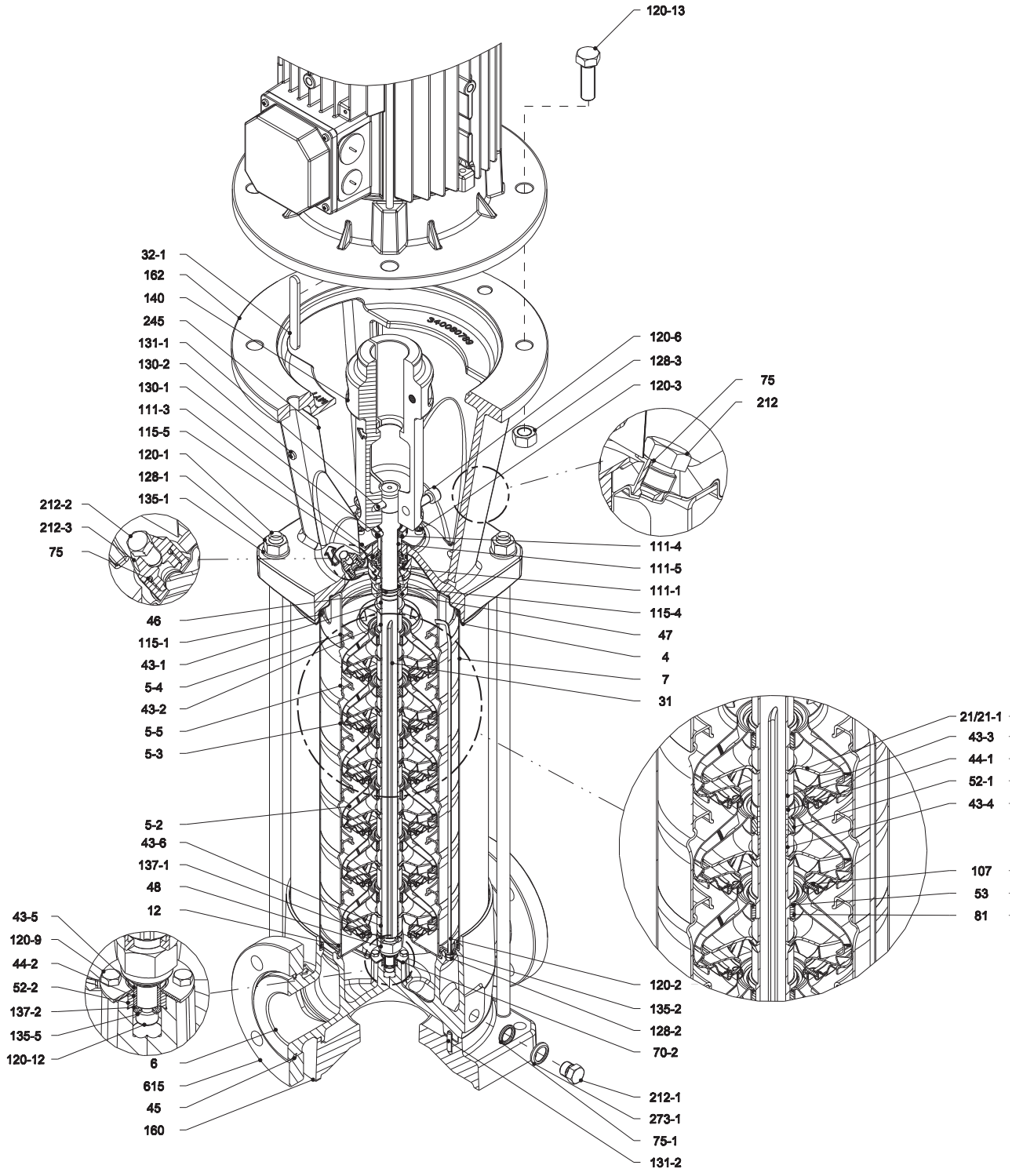

Pump without ball bearing
from 5.5 kW to 30 kW

EBARA Pumps Europe S.p.A. reserves the right to make changes without prior notice.

SECTIONAL TABLE
EVMS(L)32

N°	PART NAME	MATERIAL		DIMENSIONS	STANDARD
		EVMS	EVMSL		
4	Casing cover	EN 1.4301 (AISI 304)	EN 1.4404 (AISI 316L)		
5-2	Intermediate casing	EN 1.4301 (AISI 304)	EN 1.4404 (AISI 316L)		
5-3	Intermediate casing with bearing	EN 1.4301 (AISI 304)	EN 1.4404 (AISI 316L)		
5-4	Discharge casing	EN 1.4301 (AISI 304)	EN 1.4404 (AISI 316L)		
5-5	Top intermediate casing	EN 1.4301 (AISI 304)	EN 1.4404 (AISI 316L)		
6	Bottom casing	EN 1.4308 (ASTM CF8)	EN 1.4408 (ASTM CF8M)		
7	Outer casing	EN 1.4301 (AISI 304)	EN 1.4404 (AISI 316L)		
12	Suction cover	EN 1.4301 (AISI 304)	EN 1.4404 (AISI 316L)		
21	Impeller	EN 1.4301 (AISI 304)	EN 1.4404 (AISI 316L)		
21-1	Reduced impeller	EN 1.4301 (AISI 304)	EN 1.4404 (AISI 316L)		
31	Shaft	EN 1.4301 (AISI 304)	EN 1.4404 (AISI 316L)		
32-1	Adjuster key	EN 1.4301 (AISI 304)			
43-1	Shaft sleeve (mechanical seal)	EN 1.4301 (AISI 304)	EN 1.4404 (AISI 316L)		
43-2	Shaft sleeve (intermediate)	EN 1.4301 (AISI 304)	EN 1.4404 (AISI 316L)		
43-3	Shaft sleeve (bearing)	EN 1.4301 (AISI 304)	EN 1.4404 (AISI 316L)		
43-4	Shaft sleeve (adjustment)	EN 1.4301 (AISI 304)	EN 1.4404 (AISI 316L)		
43-5	Shaft sleeve (last stage)	EN 1.4301 (AISI 304)	EN 1.4404 (AISI 316L)		
43-6	Shaft sleeve (adjustment)	EN 1.4301 (AISI 304)	EN 1.4404 (AISI 316L)		
44-1	Shaft sleeve bearing	Tungsten carbride			
44-2	Shaft sleeve (bearing)	Tungsten carbride			
45	Flange holder	EN 1.4301 (AISI 304)			
46	Ring (mechanical seal)	EN 1.4404 (AISI 316L)			
47	Ring holder	EN 1.4404 (AISI 316L)			
48	Impeller nut	EN 1.4301 (AISI 304) with inox insert	EN 1.4401 (AISI 316) with inox insert		
52-1	Sleeve bearing	Tungsten carbride			
52-2	Sleeve bearing (bottom casing)	Tungsten carbride			
53	Bush holder	EN 1.4301 (AISI 304)	EN 1.4404 (AISI 316L)		
70-2	Ring for bearing sleeve	EN 1.4301 (AISI 304)	EN 1.4404 (AISI 316L)		
75	O-Ring (priming plug)	EPDM / FPM		Ø12.37x2.62	OR 3050
75-1	O-Ring (drainage plug)	EPDM / FPM			
81	Bush	PTFE			
107	Liner ring	EN 1.4301 (AISI 304) + PPS	EN 1.4404 (AISI 316L) + PPS		
111-1	Mechanical seal	see pages 6-7			
111-3	Mechanical seal seat	EN 1.4301 (AISI 304)	EN 1.4401 (AISI 316)		
111-4	Seal holder	EN 1.4404 (AISI 316L)			
111-5	Mechanical seal cartridge sleeve	EN 1.4301 (AISI 304)	EN 1.4404 (AISI 316L)		
115-1	O-Ring (outer casing)	EPDM / FPM		Ø240.66x5.34	OR 6945
115-4	O-Ring (cartridge sleeve)	EPDM / FPM		Ø23.39x3.53	OR 4093
115-5	O-Ring (seal flange)	EPDM / FPM		Ø44.04x3.53	OR 4175
120-1	Tie rod	EN 1.4057 (AISI 431)			
120-2	Tie rod (stage)	EN 1.4301 (AISI 304)	EN 1.4401 (AISI 316)		
120-3	Screw (seal flange)	A2-70		M5x12	ISO 4762

EBARA Pumps Europe S.p.A. reserves the right to make changes without prior notice.

SECTIONAL TABLE
EVMS(L)32

N°	PART NAME		MATERIAL EVMS	MATERIAL EVMSL	DIMENSIONS	STANDARD
120-6	Screw (pump coupling)	up to 4.0 kW	Galvanized steel 8.8 strength class ISO 898/1		M6x25	ISO 4762
		from 5.5 kW to 7.5 kW	Galvanized steel 8.8 strength class ISO 898/1		M8x25	ISO 4762
		above 11 kW	Galvanized steel 8.8 strength class ISO 898/1		M10x30	ISO 4762
120-9	Screw (bottom casing)		A2-70		M5x8	ISO 4017
120-12	Screw (shaft)		A2-70		M6x16	ISO 4762
120-13	Screw for motor	MEC 90-100-112	Galvanized steel 8.8 strength class ISO 898/1		M8x20	ISO 4017
		MEC 132	Galvanized steel 8.8 strength class ISO 898/1		M12x45	ISO 4017
		MEC 160-180	Galvanized steel 8.8 strength class ISO 898/1		M16x50	ISO 4017
		MEC 200	Galvanized steel 8.8 strength class ISO 898/1		M16x60	ISO 4014
128-1	Nut (tie rod)		A2-70		M16	ISO 4032
128-2	Nut (casing tie rod)		A2-70		M5	ISO 4032
128-3	Nut (motor)	MEC 132	Galvanized steel		M12	ISO 4032
		MEC 160-180-200	Galvanized steel		M16	ISO 4032
128-6	Nut (aluminium coupling)	MEC 90-100-112	Galvanized steel		M6	ISO 4032
130-1	Set screw		EN 1.4301 (AISI 304)		M6x8	ISO 4026
130-2	Screw for coupling guard		A2-70		M5x6	UNI 7687
131-1	Pin for shaft	up to 4.0 kW	Carbon Steel		Ø8x42	ISO 2338
		above 5.5 kW	Carbon Steel		Ø8X50	ISO 2338
131-2	Elastic pin		EN 1.4301 (AISI 304)		Ø6x26	ISO 8752
135-1	Washer (tie rod)		EN 1.4301 (AISI 304)		Ø16	ISO 7089
135-2	Washer (casing tie rod)		EN 1.4301 (AISI 304)	EN 1.4404 (AISI 316)	Ø5.1	UNI 1751
135-5	Washer (impeller nut)		EN 1.4301 (AISI 304)	EN 1.4404 (AISI 316L)		
135-6	Washer (aluminium coupling)	up to 4.0 kW	Carbon Steel			
137-1	Impeller spacer		EN 1.4301 (AISI 304)	EN 1.4404 (AISI 316L)		
137-2	Shaft spacer		EN 1.4301 (AISI 304)	EN 1.4404 (AISI 316L)		
140	Coupling	up to 4.0 kW	Die cast Aluminium EN AB-AISI11 Cu2 (Fe)			
		from 5.5 kW to 30 kW	Cast Iron EN GJL250 EN 1561			
160	Base		Cast Iron EN GJL200 EN 1561			
162	Motor bracket	up to 30 kW	Cast Iron EN GJS 400-15 EN 1563			
212	Priming plug		EN 1.4301 (AISI 304)	EN 1.4404 (AISI 316L)		
212-1	Drainage plug		EN 1.4301 (AISI 304)	EN 1.4404 (AISI 316L)		
212-2	Venting plug		EN 1.4401 (AISI 316)			
212-3	Priming plug		EN 1.4301 (AISI 304)	EN 1.4404 (AISI 316L)		
245	Coupling guard		EN 1.4301 (AISI 304)			
273-1	Washer (drainage plug)		EN 1.4301 (AISI 304)	EN 1.4404 (AISI 316L)		
615	Loose flange		Cast Iron EN GJS 500-7 EN 1563			

EBARA Pumps Europe S.p.A. reserves the right to make changes without prior notice.

QUANTITY FOR MODEL EVMS(L)32

Pump Type	N°																											
	4	5-2	5-3	5-4	5-5	6	7	12	21	21-1	31	32-1	43-1	43-2	43-3	43-4	43-5	43-6	44-1	44-2	45	46	47	48	52-1	52-2	53	70-2
EVMS(L)32 1-1/1.5	1	/	/	1	1	1	1	1	/	1	1	1	1	1	/	/	1	1	/	1	4	1	1	1	/	1	1	1
EVMS(L)32 1-0/2.2	1	/	/	1	1	1	1	1	1	/	1	1	1	1	/	/	1	1	/	1	4	1	1	1	/	1	1	1
EVMS(L)32 2-2/3	1	1	/	1	1	1	1	1	/	2	1	1	1	2	/	/	1	1	/	1	4	1	1	1	/	1	2	1
EVMS(L)32 2-0/4	1	1	/	1	1	1	1	1	2	/	1	1	1	2	/	/	1	1	/	1	4	1	1	1	/	1	2	1
EVMS(L)32 3-2/5.5	1	1	1	1	1	1	1	1	1	2	1	1	1	2	1	1	1	1	1	1	4	1	1	1	1	1	2	1
EVMS(L)32 3-0/5.5	1	1	1	1	1	1	1	1	3	/	1	1	1	2	1	1	1	1	1	1	4	1	1	1	1	1	2	1
EVMS(L)32 4-2/7.5	1	2	1	1	1	1	1	1	2	2	1	1	1	3	1	1	1	1	1	1	4	1	1	1	1	1	4	1
EVMS(L)32 4-0/7.5	1	2	1	1	1	1	1	1	4	/	1	1	1	3	1	1	1	1	1	1	4	1	1	1	1	1	4	1
EVMS(L)32 5-2/11	1	3	1	1	1	1	1	1	3	2	1	1	1	4	1	1	1	1	1	1	4	1	1	1	1	1	5	1
EVMS(L)32 5-0/11	1	3	1	1	1	1	1	1	5	/	1	1	1	4	1	1	1	1	1	1	4	1	1	1	1	1	5	1
EVMS(L)32 6-2/11	1	4	1	1	1	1	1	1	4	2	1	1	1	5	1	1	1	1	1	1	4	1	1	1	1	1	6	1
EVMS(L)32 6-0/11	1	4	1	1	1	1	1	1	6	/	1	1	1	5	1	1	1	1	1	1	4	1	1	1	1	1	6	1
EVMS(L)32 7-2/15	1	5	1	1	1	1	1	1	5	2	1	1	1	6	1	1	1	1	1	1	4	1	1	1	1	1	7	1
EVMS(L)32 7-0/15	1	5	1	1	1	1	1	1	7	/	1	1	1	6	1	1	1	1	1	1	4	1	1	1	1	1	7	1
EVMS(L)32 8-2/15	1	6	1	1	1	1	1	1	6	2	1	1	1	7	1	1	1	1	1	1	4	1	1	1	1	1	8	1
EVMS(L)32 8-0/15	1	6	1	1	1	1	1	1	8	/	1	1	1	7	1	1	1	1	1	1	4	1	1	1	1	1	8	1
EVMS(L)32 9-2/15	1	7	1	1	1	1	1	1	7	2	1	1	1	8	1	1	1	1	1	1	4	1	1	1	1	1	9	1
EVMS(L)32 9-1/15	1	7	1	1	1	1	1	1	8	1	1	1	1	8	1	1	1	1	1	1	4	1	1	1	1	1	9	1
EVMS(L)32 10-2/18.5	1	8	1	1	1	1	1	1	8	2	1	1	1	9	1	1	1	1	1	1	4	1	1	1	1	1	10	1
EVMS(L)32 10-0/18.5	1	8	1	1	1	1	1	1	10	/	1	1	1	9	1	1	1	1	1	1	4	1	1	1	1	1	10	1
EVMS(L)32 11-2/18.5	1	8	2	1	1	1	1	1	9	2	1	1	1	9	2	2	1	1	2	1	4	1	1	1	2	1	10	1
EVMS(L)32 11-1/18.5	1	8	2	1	1	1	1	1	10	1	1	1	1	9	2	2	1	1	2	1	4	1	1	1	2	1	10	1
EVMS(L)32 12-2/22	1	9	2	1	1	1	1	1	10	2	1	1	1	10	2	2	1	1	2	1	4	1	1	1	2	1	11	1
EVMS(L)32 12-0/22	1	9	2	1	1	1	1	1	12	/	1	1	1	10	2	2	1	1	2	1	4	1	1	1	2	1	11	1
EVMS(L)32 13-2/22	1	10	2	1	1	1	1	1	11	2	1	1	1	11	2	2	1	1	2	1	4	1	1	1	2	1	12	1
EVMS(L)32 13-0/22	1	10	2	1	1	1	1	1	13	/	1	1	1	11	2	2	1	1	2	1	4	1	1	1	2	1	12	1
EVMS(L)32 14-2/30	1	11	2	1	1	1	1	1	12	2	1	1	1	12	2	2	1	1	2	1	4	1	1	1	2	1	13	1
EVMS(L)32 14-0/30	1	11	2	1	1	1	1	1	14	/	1	1	1	12	2	2	1	1	2	1	4	1	1	1	2	1	13	1

Pump Type	N°																											
	75	75-1	81	107	111-1	111-3	111-4	111-5	115-1	115-4	115-5	120-1	120-2	120-3	120-6	120-9	120-12	120-13	128-1	128-2	128-3	128-6	130-1	130-2	131-1	131-2	135-1	135-2
EVMS(L)32 1-1/1.5	2	4	1	1	1	1	1	1	2	1	1	4	2	4	4	4	1	4	4	8	/	4	3	4	1	1	4	2
EVMS(L)32 1-0/2.2	2	4	1	1	1	1	1	1	2	1	1	4	2	4	4	4	1	4	4	8	/	4	3	4	1	1	4	2
EVMS(L)32 2-2/3	2	4	2	2	1	1	1	1	2	1	1	4	2	4	4	4	1	4	4	8	/	4	3	4	1	1	4	2
EVMS(L)32 2-0/4	2	4	2	2	1	1	1	1	2	1	1	4	2	4	4	4	1	4	4	8	/	4	3	4	1	1	4	2
EVMS(L)32 3-2/5.5	2	4	2	3	1	1	1	1	2	1	1	4	2	4	4	4	1	4	4	8	/	/	3	4	1	1	4	2
EVMS(L)32 3-0/5.5	2	4	2	3	1	1	1	1	2	1	1	4	2	4	4	4	1	4	4	8	/	/	3	4	1	1	4	2
EVMS(L)32 4-2/7.5	2	4	3	4	1	1	1	1	2	1	1	4	2	4	4	4	1	4	4	8	/	/	3	4	1	1	4	2
EVMS(L)32 4-0/7.5	2	4	3	4	1	1	1	1	2	1	1	4	2	4	4	4	1	4	4	8	/	/	3	4	1	1	4	2
EVMS(L)32 5-2/11	2	4	4	5	1	1	1	1	2	1	1	4	2	4	4	4	1	4	4	4	4	/	3	4	1	1	4	2
EVMS(L)32 5-0/11	2	4	4	5	1	1	1	1	2	1	1	4	2	4	4	4	1	4	4	4	4	/	3	4	1	1	4	2
EVMS(L)32 6-2/11	2	4	5	6	1	1	1	1	2	1	1	4	2	4	4	4	1	4	4	4	4	/	3	4	1	1	4	2
EVMS(L)32 6-0/11	2	4	5	6	1	1	1	1	2	1	1	4	2	4	4	4	1	4	4	4	4	/	3	4	1	1	4	2
EVMS(L)32 7-2/15	2	4	6	7	1	1	1	1	2	1	1	4	2	4	4	4	1	4	4	4	4	/	3	4	1	1	4	2
EVMS(L)32 7-0/15	2	4	6	7	1	1	1	1	2	1	1	4	2	4	4	4	1	4	4	4	4	/	3	4	1	1	4	2
EVMS(L)32 8-2/15	2	4	7	8	1	1	1	1	2	1	1	4	2	4	4	4	1	4	4	4	4	/	3	4	1	1	4	2
EVMS(L)32 8-0/15	2	4	7	8	1	1	1	1	2	1	1	4	2	4	4	4	1	4	4	4	4	/	3	4	1	1	4	2
EVMS(L)32 9-2/15	2	4	8	9	1	1	1	1	2	1	1	4	2	4	4	4	1	4	4	4	4	/	3	4	1	1	4	2
EVMS(L)32 9-1/15	2	4	8	9	1	1	1	1	2	1	1	4	2	4	4	4	1	4	4	4	4	/	3	4	1	1	4	2
EVMS(L)32 10-2/18.5	2	4	9	10	1	1	1	1	2	1	1	4	2	4	4	4	1	4	4	4	4	/	3	4	1	1	4	2
EVMS(L)32 10-0/18.5	2	4	9	10	1	1	1	1	2	1	1	4	2	4	4	4	1	4	4	4	4	/	3	4	1	1	4	2
EVMS(L)32 11-2/18.5	2	4	9	11	1	1	1	1	2	1	1	4	2	4	4	4	1	4	4	4	4	/	3	4	1	1	4	2
EVMS(L)32 11-1/18.5	2	4	9	11	1	1	1	1	2	1	1	4	2	4	4	4	1	4	4	4	4	/	3	4	1	1	4	2
EVMS(L)32 12-2/22	2	4	10	12	1	1	1	1	2	1	1	4	2	4	4	4	1	4	4	4	4	/	3	4	1	1	4	2
EVMS(L)32 12-0/22	2	4	10	12	1	1	1	1	2	1	1	4	2	4	4	4	1	4	4	4	4	/	3	4	1	1	4	2
EVMS(L)32 13-2/22	2	4	11	13	1	1	1	1	2	1	1	4	2	4	4	4	1	4	4	4	4	/	3	4	1	1	4	2
EVMS(L)32 13-0/22	2	4	11	13	1	1	1	1	2	1	1	4	2	4	4	4	1	4	4	4	4	/	3	4	1	1	4	2
EVMS(L)32 14-2/30	2	4	12	14	1	1	1	1	2	1	1	4	2	4	4	4	1	4	4	4	4	/	3	4	1	1	4	2
EVMS(L)32 14-0/30	2	4	12	14	1	1	1	1	2	1	1	4	2	4	4	4	1	4	4	4	4	/	3	4	1	1	4	2

EBARA Pumps Europe S.p.A. reserves the right to make changes without prior notice.

QUANTITY FOR MODEL EVMS(L)32

Pump Type	N°													
	135-5	135-6	137-1	137-2	140	160	162	212	212-1	212-2	212-3	245	273-1	615
EVMS(L)32 1-1/1.5	1	4	1	1	2	1	1	1	4	1	1	2	4	2
EVMS(L)32 1-0/2.2	1	4	1	1	2	1	1	1	4	1	1	2	4	2
EVMS(L)32 2-2/3	1	4	1	1	2	1	1	1	4	1	1	2	4	2
EVMS(L)32 2-0/4	1	4	1	1	2	1	1	1	4	1	1	2	4	2
EVMS(L)32 3-2/5.5	1	/	1	1	2	1	1	1	4	1	1	2	4	2
EVMS(L)32 3-0/5.5	1	/	1	1	2	1	1	1	4	1	1	2	4	2
EVMS(L)32 4-2/7.5	1	/	1	1	2	1	1	1	4	1	1	2	4	2
EVMS(L)32 4-0/7.5	1	/	1	1	2	1	1	1	4	1	1	2	4	2
EVMS(L)32 5-2/11	1	/	1	1	2	1	1	1	4	1	1	2	4	2
EVMS(L)32 5-0/11	1	/	1	1	2	1	1	1	4	1	1	2	4	2
EVMS(L)32 6-2/11	1	/	1	1	2	1	1	1	4	1	1	2	4	2
EVMS(L)32 6-0/11	1	/	1	1	2	1	1	1	4	1	1	2	4	2
EVMS(L)32 7-2/15	1	/	1	1	2	1	1	1	4	1	1	2	4	2
EVMS(L)32 7-0/15	1	/	1	1	2	1	1	1	4	1	1	2	4	2
EVMS(L)32 8-2/15	1	/	1	1	2	1	1	1	4	1	1	2	4	2
EVMS(L)32 8-0/15	1	/	1	1	2	1	1	1	4	1	1	2	4	2
EVMS(L)32 9-2/15	1	/	1	1	2	1	1	1	4	1	1	2	4	2
EVMS(L)32 9-1/15	1	/	1	1	2	1	1	1	4	1	1	2	4	2
EVMS(L)32 10-2/18.5	1	/	1	1	2	1	1	1	4	1	1	2	4	2
EVMS(L)32 10-0/18.5	1	/	1	1	2	1	1	1	4	1	1	2	4	2
EVMS(L)32 11-2/18.5	1	/	1	1	2	1	1	1	4	1	1	2	4	2
EVMS(L)32 11-1/18.5	1	/	1	1	2	1	1	1	4	1	1	2	4	2
EVMS(L)32 12-2/22	1	/	1	1	2	1	1	1	4	1	1	2	4	2
EVMS(L)32 12-0/22	1	/	1	1	2	1	1	1	4	1	1	2	4	2
EVMS(L)32 13-2/22	1	/	1	1	2	1	1	1	4	1	1	2	4	2
EVMS(L)32 13-0/22	1	/	1	1	2	1	1	1	4	1	1	2	4	2
EVMS(L)32 14-2/30	1	/	1	1	2	1	1	1	4	1	1	2	4	2
EVMS(L)32 14-0/30	1	/	1	1	2	1	1	1	4	1	1	2	4	2

BEARINGS EVMS(L)32

Pump Type	N° 56
EVMS(L)32 1-1/1.5	/
EVMS(L)32 1-0/2.2	/
EVMS(L)32 2-2/3.0	/
EVMS(L)32 2-0/4.0	/
EVMS(L)32 3-2/5.5	/
EVMS(L)32 3-0/5.5	/
EVMS(L)32 4-2/7.5	/
EVMS(L)32 4-0/7.5	/
EVMS(L)32 5-2/11	/
EVMS(L)32 5-0/11	/
EVMS(L)32 6-2/11	/
EVMS(L)32 6-0/11	/
EVMS(L)32 7-2/15	/
EVMS(L)32 7-0/15	/
EVMS(L)32 8-2/15	/
EVMS(L)32 8-0/15	/
EVMS(L)32 9-2/15	/
EVMS(L)32 9-1/15	/
EVMS(L)32 10-2/18.5	/
EVMS(L)32 10-0/18.5	/
EVMS(L)32 11-2/18.5	/
EVMS(L)32 11-1/18.5	/
EVMS(L)32 12-2/22	/
EVMS(L)32 12-0/22	/
EVMS(L)32 13-2/22	/
EVMS(L)32 13-0/22	/
EVMS(L)32 14-2/30	/
EVMS(L)32 14-0/30	/

EBARA Pumps Europe S.p.A. reserves the right to make changes without prior notice.

PERFORMANCE CURVE
EVMSG32

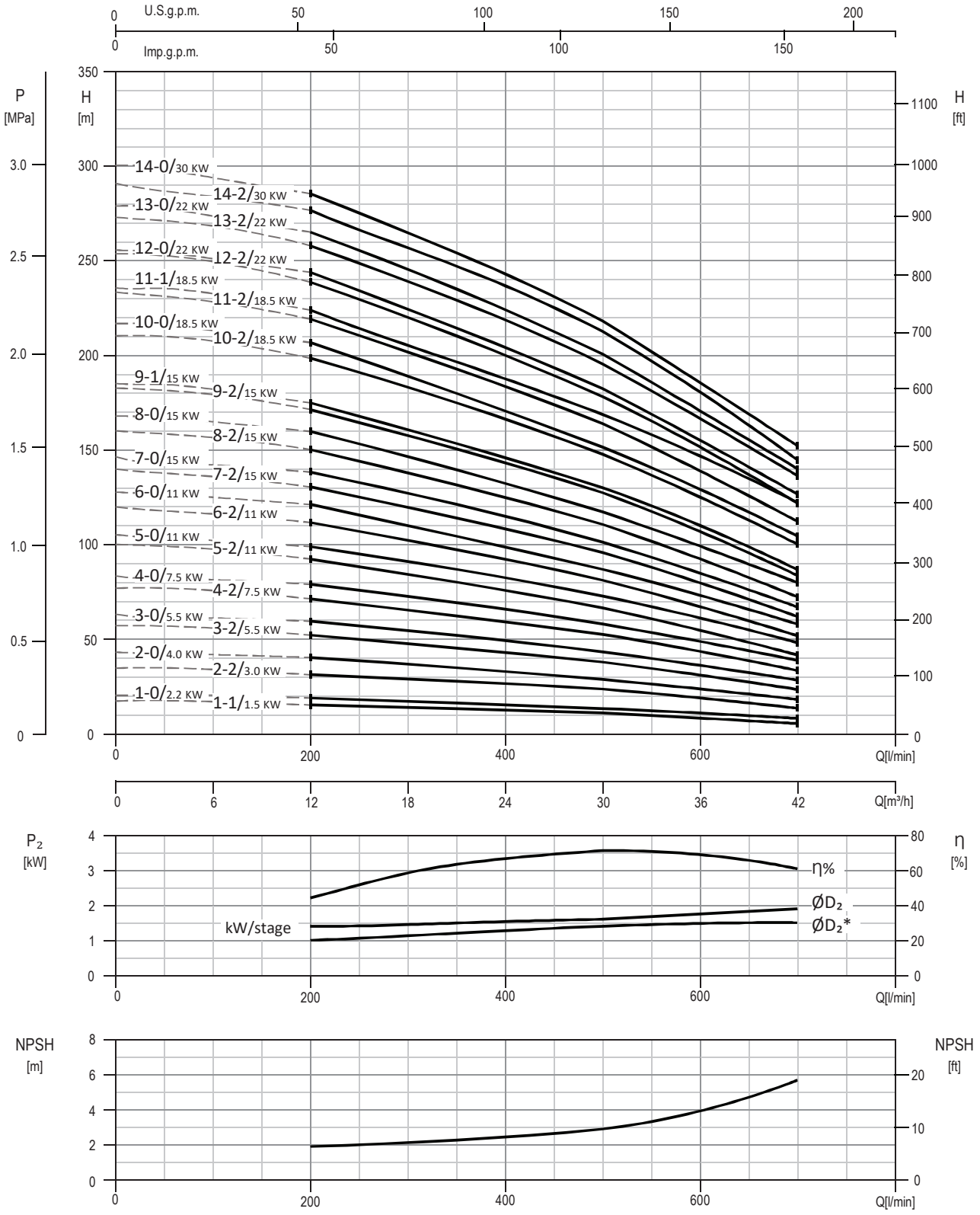

Test standard: ISO 9906:2012 - Grade 3B

EBARA Pumps Europe S.p.A. reserves the right to make changes without prior notice.

TECHNICAL DATA
EVMSG32

Dimensional sketch

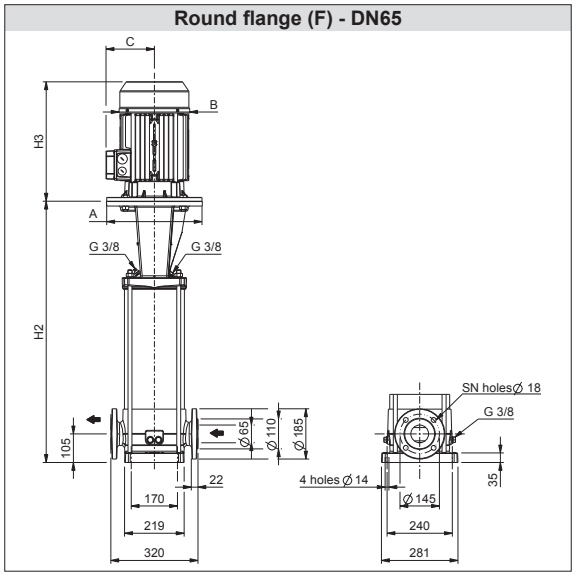

Dimensions [mm] and Weights [Kg]

Pump Type	Pmax [MPa]	Motor					Round flange (F)				
		kW	Size	A Ø	B	C	H2	H2+H3	SN	Weight Pump	Weight Pump + Motor
EVMSG32 1-1/1.5	1.6	1.5	90	140	160	119	451	741	4	45.3	58.8
EVMSG32 1-0/2.2	1.6	2.2	90	140	160	119	451	741	4	45.3	60.3
EVMSG32 2-2/3.0	1.6	3.0	100	160	176	123	531	873	4	48.6	70.6
EVMSG32 2-0/4.0	1.6	4.0	112	160	193	138	531	896	4	48.6	77.1
EVMSG32 3-2/5.5	1.6	5.5	132	300	220	152	705	1105	4	62.4	101.4
EVMSG32 3-0/5.5	1.6	5.5	132	300	220	152	705	1105	4	62.4	101.4
EVMSG32 4-2/7.5	1.6	7.5	132	300	220	152	775	1195	4	65.7	111.7
EVMSG32 4-0/7.5	1.6	7.5	132	300	220	152	775	1195	4	65.7	111.7
EVMSG32 5-2/11	1.6	11	160	350	259	180	875	1314	4	75.7	138.2
EVMSG32 5-0/11	1.6	11	160	350	259	180	875	1314	4	75.7	138.2
EVMSG32 6-2/11	1.6	11	160	350	259	180	945	1384	4	79.0	141.5
EVMSG32 6-0/11	1.6	11	160	350	259	180	945	1384	4	79.0	141.5
EVMSG32 7-2/15	1.6	15	160	350	311	240	1015	1510	4	82.2	183.2
EVMSG32 7-0/15	1.6	15	160	350	311	240	1015	1510	4	82.2	183.2
EVMSG32 8-2/15	2.5	15	160	350	311	240	1085	1580	8	87.1	188.1
EVMSG32 8-0/15	2.5	15	160	350	311	240	1085	1580	8	87.1	188.1
EVMSG32 9-2/15	2.5	15	160	350	311	240	1155	1650	8	90.6	191.6
EVMSG32 9-1/15	2.5	15	160	350	311	240	1155	1650	8	90.6	191.6
EVMSG32 10-2/18.5	2.5	18.5	160	350	311	240	1225	1720	8	94.0	203.0
EVMSG32 10-0/18.5	2.5	18.5	160	350	311	240	1225	1720	8	94.0	203.0
EVMSG32 11-2/18.5	2.5	18.5	160	350	311	240	1295	1847	8	97.5	206.5
EVMSG32 11-1/18.5	2.5	18.5	160	350	311	240	1295	1847	8	97.5	206.5
EVMSG32 12-2/22	3.0	22	180	350	354	260	1365	1917	8	103.5	238.5
EVMSG32 12-0/22	3.0	22	180	350	354	260	1365	1917	8	103.5	238.5
EVMSG32 13-2/22	3.0	22	180	350	354	260	1435	1987	8	107.2	242.2
EVMSG32 13-0/22	3.0	22	180	350	354	260	1435	1987	8	107.2	242.2
EVMSG32 14-2/30	3.0	30	200	400	354	280	1505	2057	8	116.2	284.2
EVMSG32 14-0/30	3.0	30	200	400	354	280	1505	2057	8	116.2	284.2

1.6 MPa=16 bar; 2.5 MPa=25 bar; 3.0 MPa=30 bar

EBARA Pumps Europe S.p.A. reserves the right to make changes without prior notice.

SECTIONAL VIEW
EVMSG32

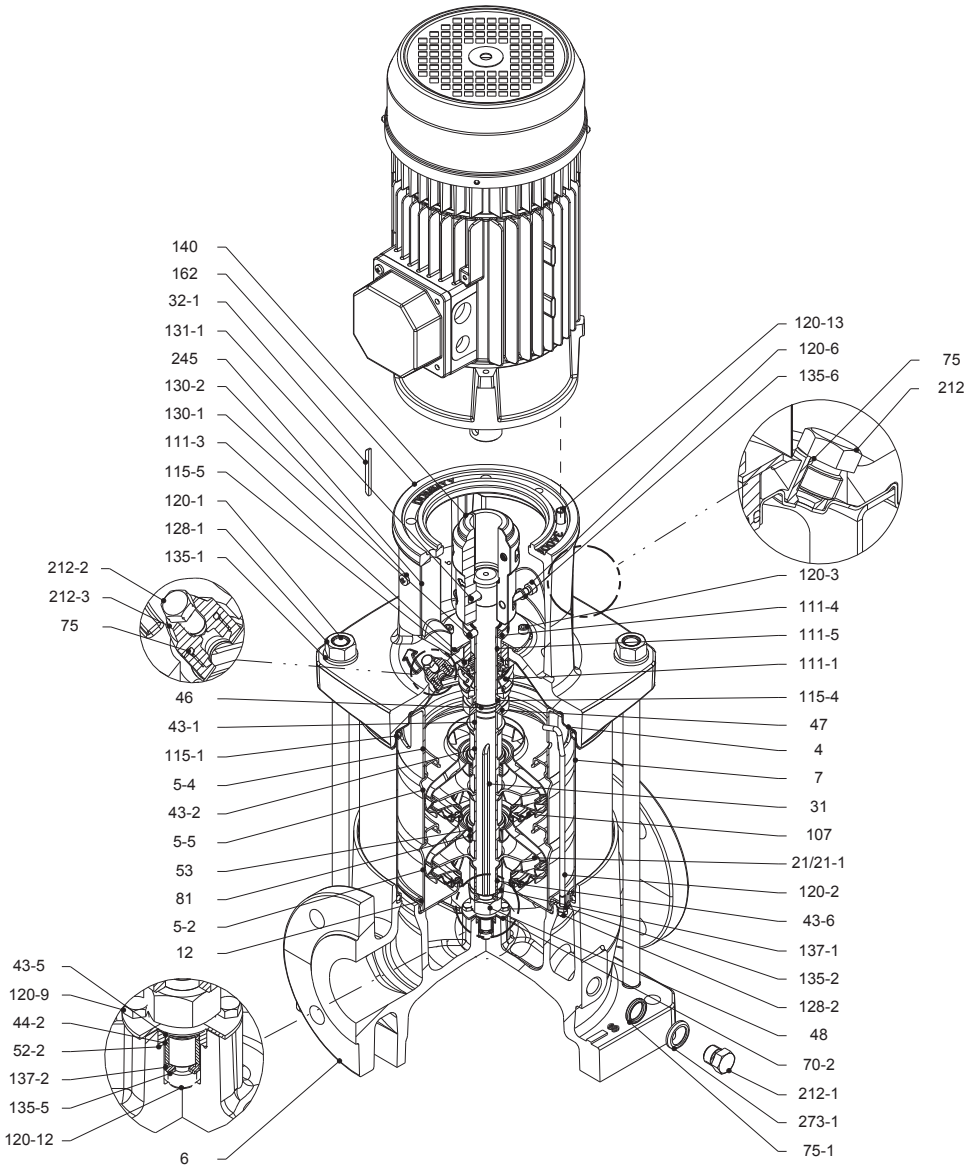

Pump without ball bearing
up to 4.0 kW

EBARA Pumps Europe

EBARA Pumps Europe S.p.A. reserves the right to make changes without prior notice.

SECTIONAL VIEW
EVMSG32

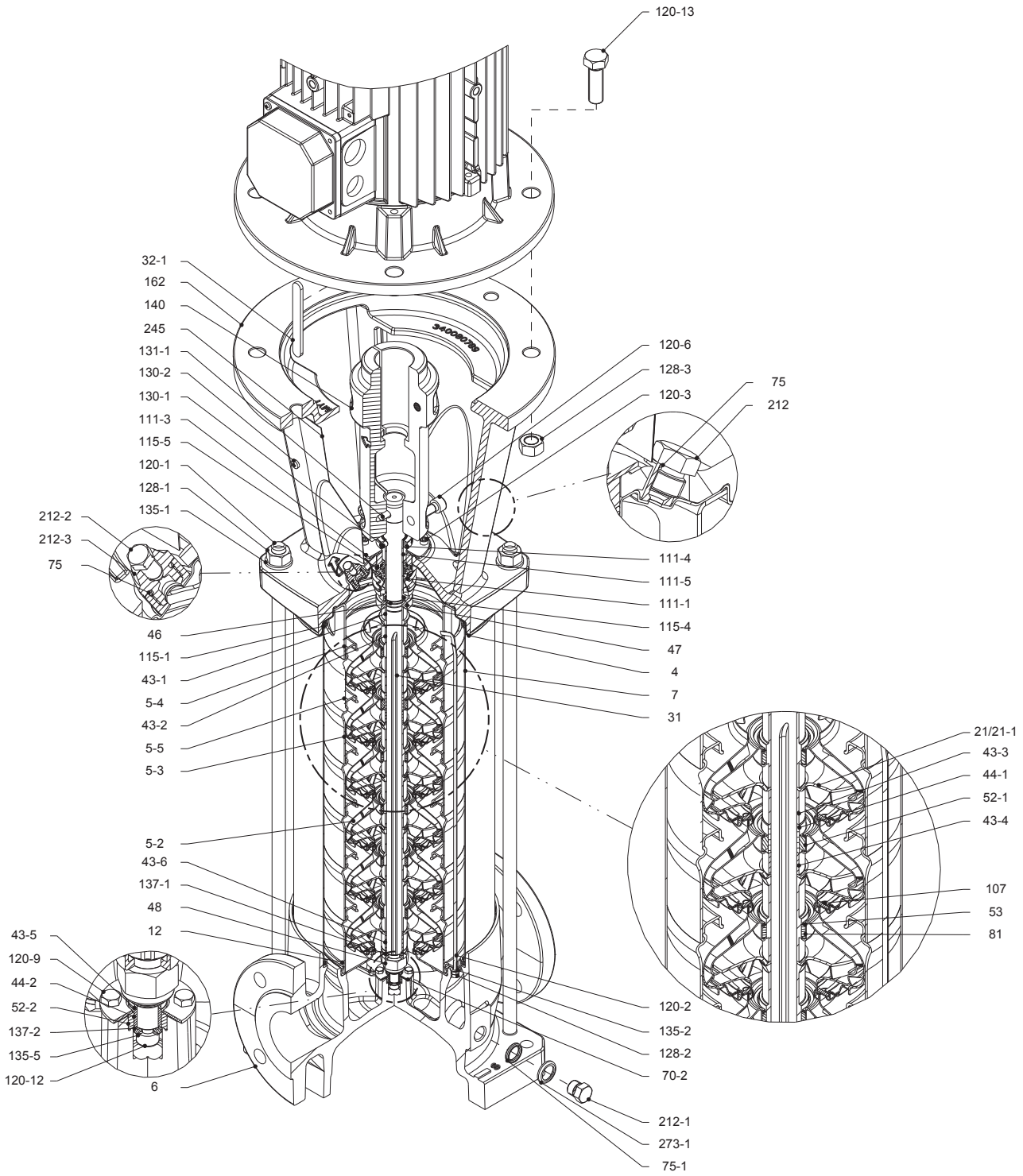

Pump without ball bearing
from 5.5 kW to 30 kW

EBARA
EBARA Pumps Europe
EBARA Pumps Europe S.p.A. reserves the right to make changes without prior notice.

SECTIONAL TABLE
EVMSG32

N°	PART NAME	MATERIAL EVMSG	DIMENSIONS	STANDARD
4	Casing cover	EN 1.4301 (AISI 304)		
5-2	Intermediate casing	EN 1.4301 (AISI 304)		
5-3	Intermediate casing with bearing	EN 1.4301 (AISI 304)		
5-4	Discharge casing	EN 1.4301 (AISI 304)		
5-5	Top intermediate casing	EN 1.4301 (AISI 304)		
6	Bottom casing	Cast Iron EN GJL-250 EN 1561		
7	Outer casing	EN 1.4301 (AISI 304)		
12	Suction cover	EN 1.4301 (AISI 304)		
21	Impeller	EN 1.4301 (AISI 304)		
21-1	Reduced impeller	EN 1.4301 (AISI 304)		
31	Shaft	EN 1.4301 (AISI 304)		
32-1	Adjuster key	EN 1.4301 (AISI 304)		
43-1	Shaft sleeve (mechanical seal)	EN 1.4301 (AISI 304)		
43-2	Shaft sleeve (intermediate)	EN 1.4301 (AISI 304)		
43-3	Shaft sleeve (bearing)	EN 1.4301 (AISI 304)		
43-4	Shaft sleeve (adjustment)	EN 1.4301 (AISI 304)		
43-5	Shaft sleeve (last stage)	EN 1.4301 (AISI 304)		
43-6	Shaft sleeve (adjustment)	EN 1.4301 (AISI 304)		
44-1	Shaft sleeve bearing	Tungsten carbride		
44-2	Shaft sleeve (bearing)	Tungsten carbride		
46	Ring (mechanical seal)	EN 1.4404 (AISI 316L)		
47	Ring holder	EN 1.4301 (AISI 304)		
48	Impeller nut	EN 1.4301 (AISI 304) with inox insert		
52-1	Sleeve bearing	Tungsten carbride		
52-2	Bearing sleeve (bottom casing)	Tungsten carbride		
53	Bush holder	EN 1.4301 (AISI 304)		
70-2	Ring for bearing sleeve	EN 1.4301 (AISI 304)		
75	O-Ring (priming plug)	EPDM / FPM	Ø12.37x2.62	OR 3050
75-1	O-Ring (drainage plug)	EPDM / FPM		
81	Bush	PTFE		
107	Liner ring	EN 1.4301 (AISI 304) + PPS		
111-1	Mechanical seal	see pages 6-7		
111-3	Mechanical seal seat	EN 1.4301 (AISI 304)		
111-4	Seal holder	EN 1.4404 (AISI 316L)		
111-5	Mechanical seal cartridge sleeve	EN 1.4301 (AISI 304)		
115-1	O-Ring (outer casing)	EPDM / FPM	Ø240.66x5.34	OR 6945
115-4	O-Ring (cartridge sleeve)	EPDM / FPM	Ø23.39x3.53	OR 4093
115-5	O-Ring (seal flange)	EPDM / FPM	Ø44.04x3.53	OR 4175
120-1	Tie rod	EN 1.4057 (AISI 431)		
120-2	Tie rod (stage)	EN 1.4301 (AISI 304)		
120-3	Screw (seal flange)	A2-70	M5x12	ISO 4762

EBARA Pumps Europe S.p.A. reserves the right to make changes without prior notice.

SECTIONAL TABLE
EVMSG32

N°	PART NAME		MATERIAL EVMSG	DIMENSIONS	STANDARD
120-6	Screw (pump coupling)	up to 4.0 kW	Galvanized steel 8.8 strength class ISO 898/1	M6x25	ISO 4762
		from 5.5 kW to 7.5 kW	Galvanized steel 8.8 strength class ISO 898/1	M8x25	ISO 4762
		above 11 kW	Galvanized steel 8.8 strength class ISO 898/1	M10x30	ISO 4762
120-9	Screw (bottom casing)		A2-70	M5x8	ISO 4017
120-12	Screw (shaft)		A2-70	M6x16	ISO 4762
120-13	Screw for motor	MEC 90-100-112	Galvanized steel 8.8 strength class ISO 898/1	M8x20	ISO 4017
		MEC 132	Galvanized steel 8.8 strength class ISO 898/1	M12x45	ISO 4017
		MEC 160-180	Galvanized steel 8.8 strength class ISO 898/1	M16x50	ISO 4017
		MEC 200-225	Galvanized steel 8.8 strength class ISO 898/1	M16x60	ISO 4014
128-1	Nut (tie rod)		A2-70	M16	ISO 4032
128-2	Nut (casing tie rod)		A2-70	M5	ISO 4032
128-3	Nut (motor)	MEC 132	Galvanized steel	M12	ISO 4032
		MEC 160-180-200-225	Galvanized steel	M16	ISO 4032
128-6	Nut (aluminium coupling)	MEC 90-100-112	Galvanized steel	M6	ISO 4032
130-1	Set screw		EN 1.4301 (AISI 304)	M6x8	ISO 4026
130-2	Screw for coupling guard		A2-70	M5x6	UNI 7687
131-1	Pin for shaft	up to 4.0 kW	Carbon Steel	Ø8x42	ISO 2338
		above 5.5 kW	Carbon Steel	Ø8X50	ISO 2338
135-1	Washer (tie rod)		EN 1.4301 (AISI 304)	Ø16	ISO 7089
135-2	Washer (casing tie rod)		EN 1.4301 (AISI 304)	Ø5,1	UNI 1751
135-5	Washer (impeller nut)		EN 1.4301 (AISI 304)		
135-6	Washer (aluminium coupling)	up to 4.0 kW	Carbon Steel		
137-1	Impeller spacer		EN 1.4301 (AISI 304)		
137-2	Shaft spacer		EN 1.4301 (AISI 304)		
140	Coupling	up to 4.0 kW	Die cast Aluminium EN AB-AISI11 Cu2 (Fe)		
		from 5.5 kW to 30 kW	Cast Iron EN GJL250 EN 1561		
162	Motor bracket	up to 30 kW	Cast Iron EN GJS 400-15 EN 1563		
212	Priming plug		EN 1.4301 (AISI 304)		
212-1	Drainage plug		EN 1.4301 (AISI 304)		
212-2	Venting plug		EN 1.4401 (AISI 316)		
212-3	Priming plug		EN 1.4301 (AISI 304)		
245	Coupling guard		EN 1.4301 (AISI 304)		
273-1	Washer (drainage plug)		EN 1.4301 (AISI 304)		

EBARA Pumps Europe S.p.A. reserves the right to make changes without prior notice.

QUANTITY FOR MODEL EVMSG32

Pump Type	N°																											
	4	5-2	5-3	5-4	5-5	6	7	12	21	21-1	31	32-1	43-1	43-2	43-3	43-4	43-5	43-6	44-1	44-2	46	47	48	52-1	52-2	53	70-2	75
EVMSG32 1-1/1.5	1	/	/	1	1	1	1	1	/	1	1	1	1	1	/	/	1	1	/	1	1	1	1	/	1	1	1	2
EVMSG32 1-0/2.2	1	/	/	1	1	1	1	1	1	/	1	1	1	1	/	/	1	1	/	1	1	1	1	/	1	1	1	2
EVMSG32 2-2/3.0	1	1	/	1	1	1	1	1	/	2	1	1	1	2	/	/	1	1	/	1	1	1	1	/	1	2	1	2
EVMSG32 2-0/4.0	1	1	/	1	1	1	1	1	2	/	1	1	1	2	/	/	1	1	/	1	1	1	1	/	1	2	1	2
EVMSG32 3-2/5.5	1	1	1	1	1	1	1	1	1	2	1	1	1	2	1	1	1	1	1	1	1	1	1	1	1	2	1	2
EVMSG32 3-0/5.5	1	1	1	1	1	1	1	1	3	/	1	1	1	2	1	1	1	1	1	1	1	1	1	1	1	2	1	2
EVMSG32 4-2/7.5	1	2	1	1	1	1	1	1	2	2	1	1	1	3	1	1	1	1	1	1	1	1	1	1	1	4	1	2
EVMSG32 4-0/7.5	1	2	1	1	1	1	1	1	4	/	1	1	1	3	1	1	1	1	1	1	1	1	1	1	1	4	1	2
EVMSG32 5-2/11	1	3	1	1	1	1	1	1	3	2	1	1	1	4	1	1	1	1	1	1	1	1	1	1	1	5	1	2
EVMSG32 5-0/11	1	3	1	1	1	1	1	1	5	/	1	1	1	4	1	1	1	1	1	1	1	1	1	1	1	5	1	2
EVMSG32 6-2/11	1	4	1	1	1	1	1	1	4	2	1	1	1	5	1	1	1	1	1	1	1	1	1	1	1	6	1	2
EVMSG32 6-0/11	1	4	1	1	1	1	1	1	6	/	1	1	1	5	1	1	1	1	1	1	1	1	1	1	1	6	1	2
EVMSG32 7-2/15	1	5	1	1	1	1	1	1	5	2	1	1	1	6	1	1	1	1	1	1	1	1	1	1	1	7	1	2
EVMSG32 7-0/15	1	5	1	1	1	1	1	1	7	/	1	1	1	6	1	1	1	1	1	1	1	1	1	1	1	7	1	2
EVMSG32 8-2/15	1	6	1	1	1	1	1	1	6	2	1	1	1	7	1	1	1	1	1	1	1	1	1	1	1	8	1	2
EVMSG32 8-0/15	1	6	1	1	1	1	1	1	8	/	1	1	1	7	1	1	1	1	1	1	1	1	1	1	1	8	1	2
EVMSG32 9-2/15	1	7	1	1	1	1	1	1	7	2	1	1	1	8	1	1	1	1	1	1	1	1	1	1	1	9	1	2
EVMSG32 9-1/15	1	7	1	1	1	1	1	1	8	1	1	1	1	8	1	1	1	1	1	1	1	1	1	1	1	9	1	2
EVMSG32 10-2/18.5	1	8	1	1	1	1	1	1	8	2	1	1	1	9	1	1	1	1	1	1	1	1	1	1	1	10	1	2
EVMSG32 10-0/18.5	1	8	1	1	1	1	1	1	10	/	1	1	1	9	1	1	1	1	1	1	1	1	1	1	1	10	1	2
EVMSG32 11-2/18.5	1	8	2	1	1	1	1	1	9	2	1	1	1	9	2	2	1	1	2	1	1	1	1	2	1	10	1	2
EVMSG32 11-1/18.5	1	8	2	1	1	1	1	1	10	1	1	1	1	9	2	2	1	1	2	1	1	1	1	2	1	10	1	2
EVMSG32 12-2/22	1	9	2	1	1	1	1	1	10	2	1	1	1	10	2	2	1	1	2	1	1	1	1	2	1	11	1	2
EVMSG32 12-0/22	1	9	2	1	1	1	1	1	12	/	1	1	1	10	2	2	1	1	2	1	1	1	1	2	1	11	1	2
EVMSG32 13-2/22	1	10	2	1	1	1	1	1	11	2	1	1	1	11	2	2	1	1	2	1	1	1	1	2	1	12	1	2
EVMSG32 13-0/22	1	10	2	1	1	1	1	1	13	/	1	1	1	11	2	2	1	1	2	1	1	1	1	2	1	12	1	2
EVMSG32 14-2/30	1	11	2	1	1	1	1	1	12	2	1	1	1	12	2	2	1	1	2	1	1	1	1	2	1	13	1	2
EVMSG32 14-0/30	1	11	2	1	1	1	1	1	14	/	1	1	1	12	2	2	1	1	2	1	1	1	1	2	1	13	1	2

Pump Type	N°																											
	75-1	81	107	111-1	111-3	111-4	111-5	115-1	115-4	115-5	120-1	120-2	120-3	120-6	120-9	120-12	120-13	128-1	128-2	128-3	128-6	130-1	130-2	131-1	135-1	135-2	135-5	135-6
EVMSG32 1-1/1.5	4	1	1	1	1	1	1	2	1	1	4	2	4	4	4	1	4	4	8	/	4	3	4	1	4	2	1	4
EVMSG32 1-0/2.2	4	1	1	1	1	1	1	2	1	1	4	2	4	4	4	1	4	4	8	/	4	3	4	1	4	2	1	4
EVMSG32 2-2/3.0	4	2	2	1	1	1	1	2	1	1	4	2	4	4	4	1	4	4	8	/	4	3	4	1	4	2	1	4
EVMSG32 2-0/4.0	4	2	2	1	1	1	1	2	1	1	4	2	4	4	4	1	4	4	8	/	4	3	4	1	4	2	1	4
EVMSG32 3-2/5.5	4	2	3	1	1	1	1	2	1	1	4	2	4	4	4	1	4	4	8	/	/	3	4	1	4	2	1	/
EVMSG32 3-0/5.5	4	2	3	1	1	1	1	2	1	1	4	2	4	4	4	1	4	4	8	/	/	3	4	1	4	2	1	/
EVMSG32 4-2/7.5	4	3	4	1	1	1	1	2	1	1	4	2	4	4	4	1	4	4	8	/	/	3	4	1	4	2	1	/
EVMSG32 4-0/7.5	4	3	4	1	1	1	1	2	1	1	4	2	4	4	4	1	4	4	8	/	/	3	4	1	4	2	1	/
EVMSG32 5-2/11	4	4	5	1	1	1	1	2	1	1	4	2	4	4	4	1	4	4	4	4	/	3	4	1	4	2	1	/
EVMSG32 5-0/11	4	4	5	1	1	1	1	2	1	1	4	2	4	4	4	1	4	4	4	4	/	3	4	1	4	2	1	/
EVMSG32 6-2/11	4	5	6	1	1	1	1	2	1	1	4	2	4	4	4	1	4	4	4	4	/	3	4	1	4	2	1	/
EVMSG32 6-0/11	4	5	6	1	1	1	1	2	1	1	4	2	4	4	4	1	4	4	4	4	/	3	4	1	4	2	1	/
EVMSG32 7-2/15	4	6	7	1	1	1	1	2	1	1	4	2	4	4	4	1	4	4	4	4	/	3	4	1	4	2	1	/
EVMSG32 7-0/15	4	6	7	1	1	1	1	2	1	1	4	2	4	4	4	1	4	4	4	4	/	3	4	1	4	2	1	/
EVMSG32 8-2/15	4	7	8	1	1	1	1	2	1	1	4	2	4	4	4	1	4	4	4	4	/	3	4	1	4	2	1	/
EVMSG32 8-0/15	4	7	8	1	1	1	1	2	1	1	4	2	4	4	4	1	4	4	4	4	/	3	4	1	4	2	1	/
EVMSG32 9-2/15	4	8	9	1	1	1	1	2	1	1	4	2	4	4	4	1	4	4	4	4	/	3	4	1	4	2	1	/
EVMSG32 9-1/15	4	8	9	1	1	1	1	2	1	1	4	2	4	4	4	1	4	4	4	4	/	3	4	1	4	2	1	/
EVMSG32 10-2/18.5	4	9	10	1	1	1	1	2	1	1	4	2	4	4	4	1	4	4	4	4	/	3	4	1	4	2	1	/
EVMSG32 10-0/18.5	4	9	10	1	1	1	1	2	1	1	4	2	4	4	4	1	4	4	4	4	/	3	4	1	4	2	1	/
EVMSG32 11-2/18.5	4	9	11	1	1	1	1	2	1	1	4	2	4	4	4	1	4	4	4	4	/	3	4	1	4	2	1	/
EVMSG32 11-1/18.5	4	9	11	1	1	1	1	2	1	1	4	2	4	4	4	1	4	4	4	4	/	3	4	1	4	2	1	/
EVMSG32 12-2/22	4	10	12	1	1	1	1	2	1	1	4	2	4	4	4	1	4	4	4	4	/	3	4	1	4	2	1	/
EVMSG32 12-0/22	4	10	12	1	1	1	1	2	1	1	4	2	4	4	4	1	4	4	4	4	/	3	4	1	4	2	1	/
EVMSG32 13-2/22	4	11	13	1	1	1	1	2	1	1	4	2	4	4	4	1	4	4	4	4	/	3	4	1	4	2	1	/
EVMSG32 13-0/22	4	11	13	1	1	1	1	2	1	1	4	2	4	4	4	1	4	4	4	4	/	3	4	1	4	2	1	/
EVMSG32 14-2/30	4	12	14	1	1	1	1	2	1	1	4	2	4	4	4	1	4	4	4	4	/	3	4	1	4	2	1	/
EVMSG32 14-0/30	4	12	14	1	1	1	1	2	1	1	4	2	4	4	4	1	4	4	4	4	/	3	4	1	4	2	1	/

EBARA Pumps Europe S.p.A. reserves the right to make changes without prior notice.

QUANTITY FOR MODEL EVMSG32

Pump Type	N°									
	137-1	137-2	140	162	212	212-1	212-2	212-3	245	273-1
EVMSG32 1-1/1.5	1	1	2	1	1	4	1	1	2	4
EVMSG32 1-0/2.2	1	1	2	1	1	4	1	1	2	4
EVMSG32 2-2/3.0	1	1	2	1	1	4	1	1	2	4
EVMSG32 2-0/4.0	1	1	2	1	1	4	1	1	2	4
EVMSG32 3-2/5.5	1	1	2	1	1	4	1	1	2	4
EVMSG32 3-0/5.5	1	1	2	1	1	4	1	1	2	4
EVMSG32 4-2/7.5	1	1	2	1	1	4	1	1	2	4
EVMSG32 4-0/7.5	1	1	2	1	1	4	1	1	2	4
EVMSG32 5-2/11	1	1	2	1	1	4	1	1	2	4
EVMSG32 5-0/11	1	1	2	1	1	4	1	1	2	4
EVMSG32 6-2/11	1	1	2	1	1	4	1	1	2	4
EVMSG32 6-0/11	1	1	2	1	1	4	1	1	2	4
EVMSG32 7-2/15	1	1	2	1	1	4	1	1	2	4
EVMSG32 7-0/15	1	1	2	1	1	4	1	1	2	4
EVMSG32 8-2/15	1	1	2	1	1	4	1	1	2	4
EVMSG32 8-0/15	1	1	2	1	1	4	1	1	2	4
EVMSG32 9-2/15	1	1	2	1	1	4	1	1	2	4
EVMSG32 9-1/15	1	1	2	1	1	4	1	1	2	4
EVMSG32 10-2/18.5	1	1	2	1	1	4	1	1	2	4
EVMSG32 10-0/18.5	1	1	2	1	1	4	1	1	2	4
EVMSG32 11-2/18.5	1	1	2	1	1	4	1	1	2	4
EVMSG32 11-1/18.5	1	1	2	1	1	4	1	1	2	4
EVMSG32 12-2/22	1	1	2	1	1	4	1	1	2	4
EVMSG32 12-0/22	1	1	2	1	1	4	1	1	2	4
EVMSG32 13-2/22	1	1	2	1	1	4	1	1	2	4
EVMSG32 13-0/22	1	1	2	1	1	4	1	1	2	4
EVMSG32 14-2/30	1	1	2	1	1	4	1	1	2	4
EVMSG32 14-0/30	1	1	2	1	1	4	1	1	2	4

BEARINGS EVMSG32

Pump Type	N° 56
EVMSG32 1-1/1.5	/
EVMSG32 1-0/2.2	/
EVMSG32 2-2/3.0	/
EVMSG32 2-0/4.0	/
EVMSG32 3-2/5.5	/
EVMSG32 3-0/5.5	/
EVMSG32 4-2/7.5	/
EVMSG32 4-0/7.5	/
EVMSG32 5-2/11	/
EVMSG32 5-0/11	/
EVMSG32 6-2/11	/
EVMSG32 6-0/11	/
EVMSG32 7-2/15	/
EVMSG32 7-0/15	/
EVMSG32 8-2/15	/
EVMSG32 8-0/15	/
EVMSG32 9-2/15	/
EVMSG32 9-1/15	/
EVMSG32 10-2/18.5	/
EVMSG32 10-0/18.5	/
EVMSG32 11-2/18.5	/
EVMSG32 11-1/18.5	/
EVMSG32 12-2/22	/
EVMSG32 12-0/22	/
EVMSG32 13-2/22	/
EVMSG32 13-0/22	/
EVMSG32 14-2/30	/
EVMSG32 14-0/30	/

EBARA Pumps Europe S.p.A. reserves the right to make changes without prior notice.

PERFORMANCE CURVE
EVMS(L)45

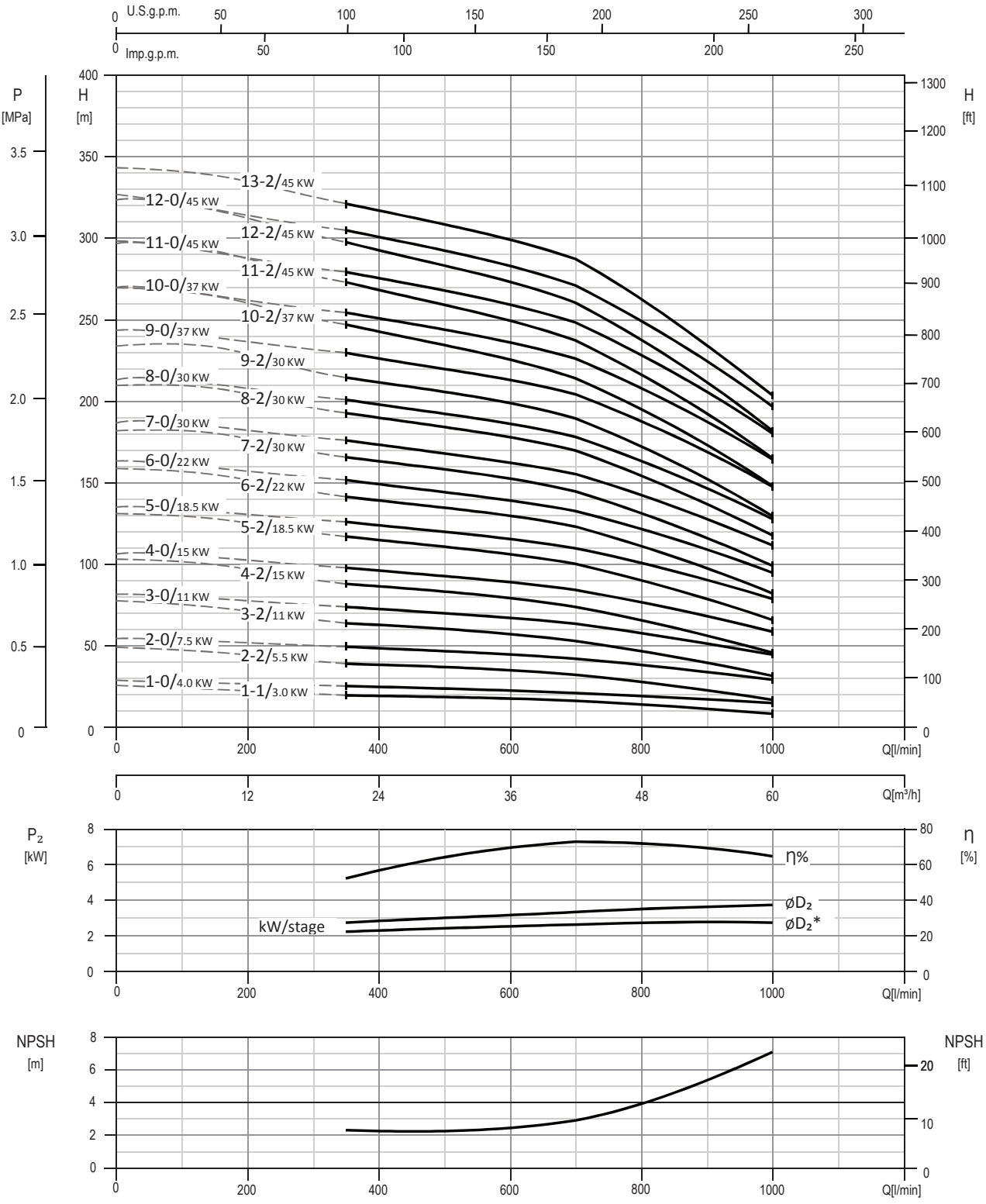

Test standard: ISO 9906:2012 - Grade 3B

EBARA Pumps Europe S.p.A. reserves the right to make changes without prior notice.

TECHNICAL DATA
EVMS(L)45

Dimensional sketch

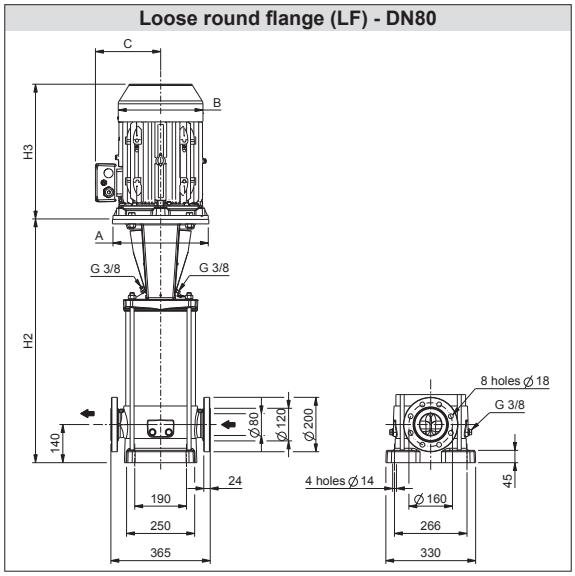

Dimensions [mm] and Weights [Kg]

Pump Type	Pmax [MPa]	Motor					Loose round flange (LF)			
		kW	Size	A Ø	B	C	H2	H2+H3	Weight Pump	Weight Pump + Motor
EVMS(L)45 1-1/3.0	1.6	3.0	100	160	176	123	546	888	62.4	84.4
EVMS(L)45 1-0/4.0	1.6	4.0	112	160	193	138	546	910	62.4	90.9
EVMS(L)45 2-2/5.5	1.6	5.5	132	300	220	152	722	1121	77.7	116.7
EVMS(L)45 2-0/7.5	1.6	7.5	132	300	220	152	722	1141	77.7	123.7
EVMS(L)45 3-2/11	1.6	11	160	350	259	180	824	1263	89.9	152.4
EVMS(L)45 3-0/11	1.6	11	160	350	259	180	824	1263	89.9	152.4
EVMS(L)45 4-2/15	1.6	15	160	350	311	240	896	1391	96.4	197.4
EVMS(L)45 4-0/15	1.6	15	160	350	311	240	896	1391	96.4	197.4
EVMS(L)45 5-2/18.5	1.6	18.5	160	350	311	240	968	1463	101.7	210.7
EVMS(L)45 5-0/18.5	1.6	18.5	160	350	311	240	968	1463	101.7	210.7
EVMS(L)45 6-2/22	2.5	22	180	350	354	260	1040	1592	107.1	242.1
EVMS(L)45 6-0/22	2.5	22	180	350	354	260	1040	1592	107.1	242.1
EVMS(L)45 7-2/30	2.5	30	200	400	354	280	1112	1664	117.7	285.7
EVMS(L)45 7-0/30	2.5	30	200	400	354	280	1112	1664	117.7	285.7
EVMS(L)45 8-2/30	2.5	30	200	400	354	280	1184	1736	123.0	291.0
EVMS(L)45 8-0/30	2.5	30	200	400	354	280	1184	1736	123.0	291.0
EVMS(L)45 9-2/30	2.5	30	200	400	354	280	1256	1808	128.5	296.5
EVMS(L)45 9-0/37	2.5	37	200	400	382	295	1273	1950	140.0	400.0
EVMS(L)45 10-2/37	3.5	37	200	400	382	295	1345	2022	145.2	405.2
EVMS(L)45 10-0/37	3.5	37	200	400	382	295	1345	2022	145.2	405.2
EVMS(L)45 11-2/45	3.5	45	225	450	449	335	1417	2183	156.1	530.1
EVMS(L)45 11-0/45	3.5	45	225	450	449	335	1417	2183	156.1	530.1
EVMS(L)45 12-2/45	3.5	45	225	450	449	335	1489	2255	161.4	535.4
EVMS(L)45 12-0/45	3.5	45	225	450	449	335	1489	2255	161.4	535.4
EVMS(L)45 13-2/45	3.5	45	225	450	449	335	1561	2327	166.7	540.7

1.6 MPa=16 bar; 2.5 MPa=25 bar; 3.5 MPa=35 bar

EBARA Pumps Europe S.p.A. reserves the right to make changes without prior notice.

SECTIONAL VIEW
EVMS(L)45

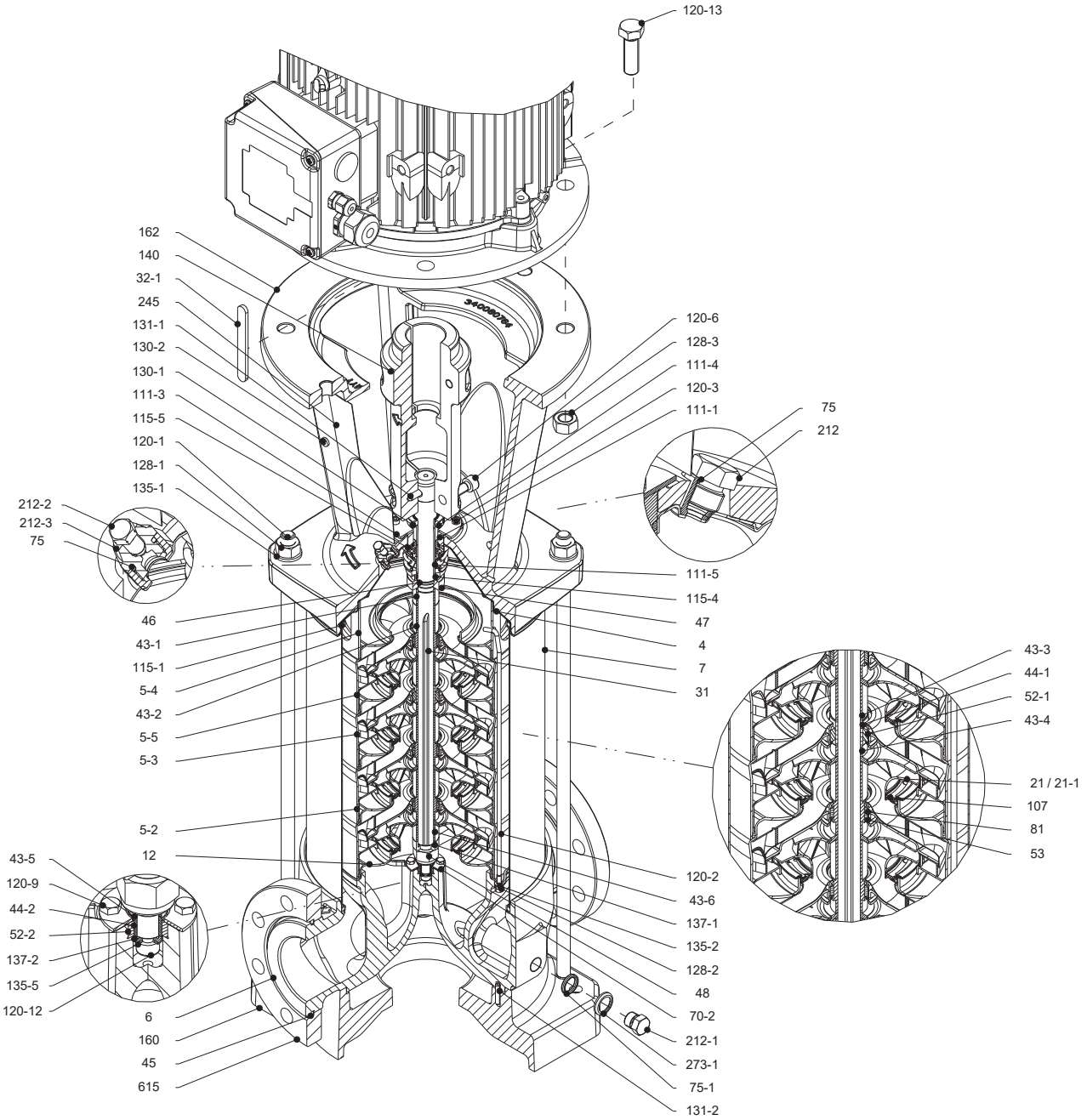

Pump without ball bearing
up to 30 kW

EBARA Pumps Europe S.p.A. reserves the right to make changes without prior notice.

SECTIONAL VIEW
EVMS(L)45

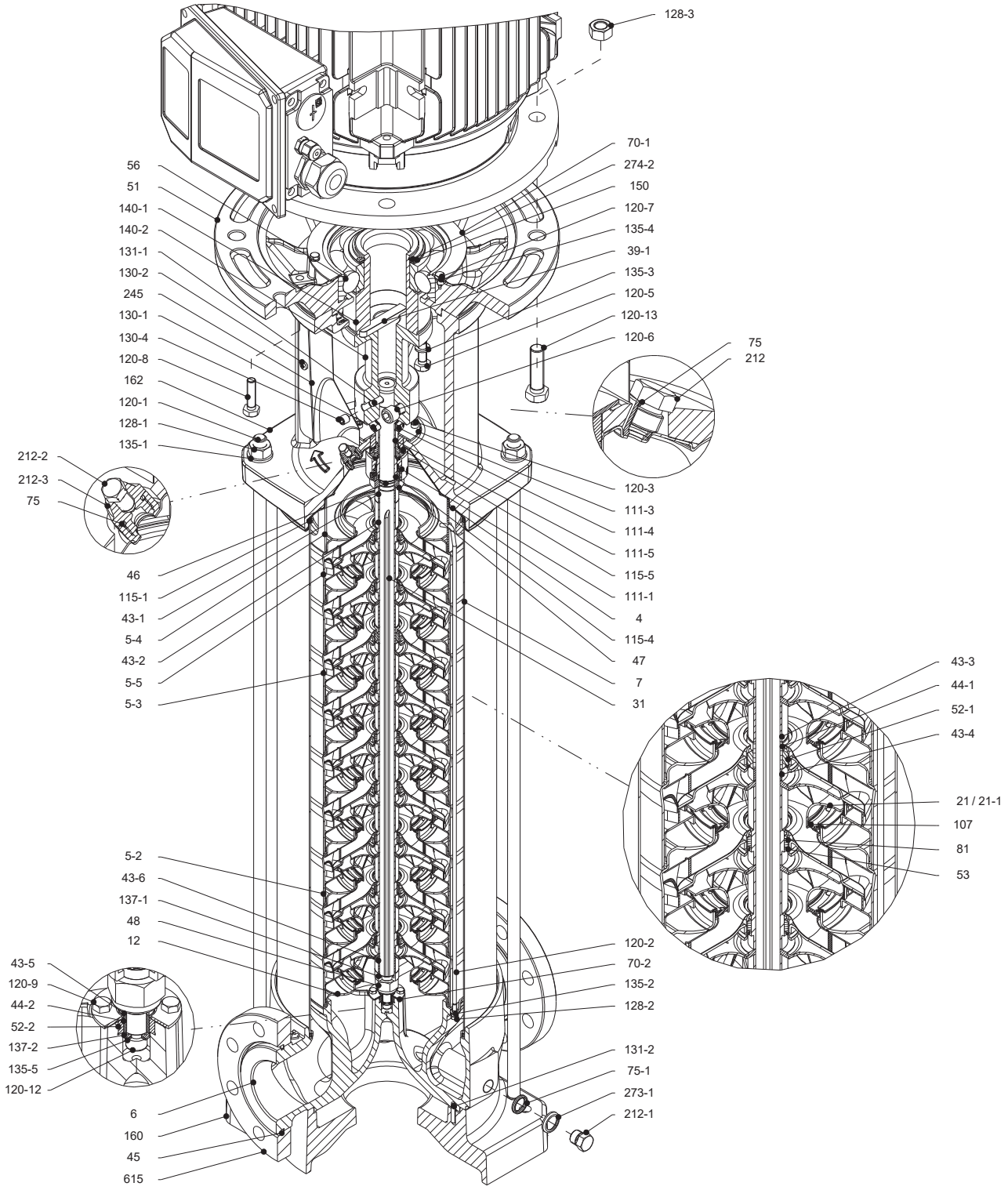

Pump with single ball bearing
above 37 kW

EBARA Pumps Europe S.p.A. reserves the right to make changes without prior notice.

SECTIONAL TABLE
EVMS(L)45

N°	PART NAME		MATERIAL		DIMENSIONS	STANDARD
			EVMS	EVMSL		
4	Casing cover		EN 1.4301 (AISI 304)	EN 1.4404 (AISI 316L)		
5-2	Intermediate casing		EN 1.4301 (AISI 304)	EN 1.4404 (AISI 316L)		
5-3	Intermediate casing with bearing		EN 1.4301 (AISI 304)	EN 1.4404 (AISI 316L)		
5-4	Discharge casing		EN 1.4301 (AISI 304)	EN 1.4404 (AISI 316L)		
5-5	Top intermediate casing		EN 1.4301 (AISI 304)	EN 1.4404 (AISI 316L)		
6	Bottom casing		EN 1.4308 (ASTM CF8)	EN 1.4408 (ASTM CF8M)		
7	Outer casing		EN 1.4301 (AISI 304)	EN 1.4404 (AISI 316L)		
12	Suction cover		EN 1.4301 (AISI 304)	EN 1.4404 (AISI 316L)		
21	Impeller		EN 1.4301 (AISI 304)	EN 1.4404 (AISI 316L)		
21-1	Reduced impeller		EN 1.4301 (AISI 304)	EN 1.4404 (AISI 316L)		
31	Shaft		EN 1.4301 (AISI 304)	EN 1.4404 (AISI 316L) - EN 1.4462 (AISI 329A)		
32-1	Adjuster key		EN 1.4301 (AISI 304)			
39-1	Coupling key	above 37 kW	Carbon Steel			
43-1	Shaft sleeve (mechanical seal)		EN 1.4301 (AISI 304)	EN 1.4404 (AISI 316L)		
43-2	Shaft sleeve (intermediate)		EN 1.4301 (AISI 304)	EN 1.4404 (AISI 316L)		
43-3	Shaft sleeve (bearing)		EN 1.4301 (AISI 304)	EN 1.4404 (AISI 316L)		
43-4	Shaft sleeve (adjustment)		EN 1.4301 (AISI 304)	EN 1.4404 (AISI 316L)		
43-5	Shaft sleeve (last stage)		EN 1.4301 (AISI 304)	EN 1.4404 (AISI 316L)		
43-6	Shaft sleeve (adjustment)		EN 1.4301 (AISI 304)	EN 1.4404 (AISI 316L)		
44-1	Shaft sleeve bearing		Tungsten carbride			
44-2	Shaft sleeve (bearing)		Tungsten carbride			
45	Flange holder		EN 1.4301 (AISI 304)			
46	Ring (mechanical seal)		EN 1.4404 (AISI 316L)			
47	Ring holder		EN 1.4404 (AISI 316L)			
48	Impeller nut		EN 1.4301 (AISI 304) with inox insert	EN 1.4401 (AISI 316) with inox insert		
51	Motor adapter	above 37 kW	Cast Iron EN GJL250 EN 1561			
52-1	Sleeve bearing		Tungsten carbride			
52-2	Bearing sleeve (bottom casing)		Tungsten carbride			
53	Bush holder		EN 1.4301 (AISI 304)	EN 1.4404 (AISI 316L)		
56	Ball bearing	above 37 kW	see table page 111			
70-1	Ring for ball bearing	above 37 kW	EN 1.4301 (AISI 304)			
70-2	Ring for bearing sleeve		EN 1.4301 (AISI 304)	EN 1.4404 (AISI 316L)		
75	O-Ring (priming plug)		EPDM / FPM		Ø12.37x2.62	OR 3050
75-1	O-Ring (drainage plug)		EPDM / FPM			
81	Bush		PTFE			
107	Liner ring		EN 1.4301 (AISI 304) + PPS	EN 1.4404 (AISI 316L) + PPS		
111-1	Mechanical seal		see pages 6-7			
111-3	Mechanical seal seat		EN 1.4301 (AISI 304)	EN 1.4401 (AISI 316)		
111-4	Seal holder		EN 1.4404 (AISI 316L)			
111-5	Mechanical seal cartridge sleeve		EN 1.4301 (AISI 304)	EN 1.4404 (AISI 316L)		
115-1	O-Ring (outer casing)		EPDM / FPM		Ø240.66x5.34	OR 6945
115-4	O-Ring (cartridge sleeve)		EPDM / FPM		Ø23.39x3.53	OR 4093
115-5	O-Ring (seal flange)		EPDM / FPM		Ø44.04x3.53	OR 4175
120-1	Tie rod		EN 1.4057 (AISI 431)			
120-2	Tie rod (stage)		EN 1.4301 (AISI 304)	EN 1.4401 (AISI 316)		
120-3	Screw (seal flange)		A2-70		M5x12	ISO 4762
120-5	Screw (extension coupling)	above 37 kW	Galvanized steel 8.8 strength class ISO 898/1		M10x30	ISO 4017

EBARA Pumps Europe S.p.A. reserves the right to make changes without prior notice.

SECTIONAL TABLE
EVMS(L)45

N°	PART NAME		MATERIAL EVMS	MATERIAL EVMSL	DIMENSIONS	STANDARD
120-6	Screw (pump coupling)	up to 4.0 kW	Galvanized steel 8.8 strength class ISO 898/1		M6x25	ISO 4762
		from 5.5 kW to 7.5 kW	Galvanized steel 8.8 strength class ISO 898/1		M8x25	ISO 4762
		from 11 kW to 30 kW	Galvanized steel 8.8 strength class ISO 898/1		M10x30	ISO 4762
		above 37 kW	Galvanized steel 8.8 strength class ISO 898/1		M12x30	ISO 4762
120-7	Screw (ball bearing)	above 37 kW	Galvanized steel 8.8 strength class ISO 898/1		M6x10	ISO 4017
120-8	Screw (motor adapter)	above 37 kW	Galvanized steel 8.8 strength class ISO 898/1		M10x40	ISO 4017
120-9	Screw (bottom casing)		A2-70		M5x8	ISO 4017
120-12	Screw (shaft)		A2-70		M6x16	ISO 4762
120-13	Screw for motor	MEC 100-112	Galvanized steel 8.8 strength class ISO 898/1		M8x20	ISO 4017
		MEC 132	Galvanized steel 8.8 strength class ISO 898/1		M12x45	ISO 4017
		MEC 160-180	Galvanized steel 8.8 strength class ISO 898/1		M16x50	ISO 4017
		MEC 200-225	Galvanized steel 8.8 strength class ISO 898/1		M16x60	ISO 4014
128-1	Nut (tie rod)		A2-70		M16	ISO 4032
128-2	Nut (casing tie rod)		A2-70		M5	ISO 4032
128-3	Nut (motor)	MEC 132	Galvanized steel		M12	ISO 4032
		MEC 160-180-200-225	Galvanized steel		M16	ISO 4032
128-6	Nut (aluminium coupling)	MEC 100-112	Galvanized steel		M6	ISO 4032
130-1	Set screw		EN 1.4301 (AISI 304)		M6x8	ISO 4026
130-2	Screw for coupling guard		A2-70		M5x6	UNI 7687
130-4	Set screw (pump coupling)	above 37 kW	Galvanized steel		M10x10	ISO 4026
131-1	Pin for shaft	up to 4.0 kW	Carbon Steel		Ø8x42	ISO 2338
		above 5.5 kW	Carbon Steel		Ø8X50	ISO 2338
131-2	Elastic pin		EN 1.4301 (AISI 304)		Ø6x26	ISO 8752
135-1	Washer (tie rod)		EN 1.4301 (AISI 304)		Ø16	ISO 7089
135-2	Washer (casing tie rod)		EN 1.4301 (AISI 304)	EN 1.4404 (AISI 316)	Ø5,1	UNI 1751
135-3	Washer (extension coupling)	above 37 kW	Galvanized steel		Ø10,2	UNI 1751
135-4	Washer (ball bearing)	above 37 kW	Plated carbon steel		Ø6,1	UNI 1751
135-5	Washer (impeller nut)		EN 1.4301 (AISI 304)	EN 1.4404 (AISI 316L)		
135-6	Washer (aluminium coupling)	up to 4.0 kW	Carbon Steel			
137-1	Impeller spacer		EN 1.4301 (AISI 304)	EN 1.4404 (AISI 316L)		
137-2	Shaft spacer		EN 1.4301 (AISI 304)	EN 1.4404 (AISI 316L)		
140	Coupling	up to 4.0 kW	Die cast Aluminium EN AB-AISI11 Cu2 (Fe)			
		from 5.5 kW to 30 kW	Cast Iron EN GJL250 EN 1561			
140-1	Extension coupling	above 37 kW	Carbon Steel			
140-2	Coupling	above 37 kW	Carbon Steel			
150	Spacer (snap ring)	above 37 kW	Carbon Steel			
160	Base		Cast Iron EN GJL200 EN 1561			
162	Motor bracket	up to 30 kW	Cast Iron EN GJS 400-15 EN 1563			
212	Priming plug		EN 1.4301 (AISI 304)	EN 1.4404 (AISI 316L)		
212-1	Drainage plug		EN 1.4301 (AISI 304)	EN 1.4404 (AISI 316L)		
212-2	Venting plug		EN 1.4401 (AISI 316)			
212-3	Priming plug		EN 1.4301 (AISI 304)	EN 1.4404 (AISI 316L)		
245	Coupling guard		EN 1.4301 (AISI 304)			
273-1	Washer (drainage plug)		EN 1.4301 (AISI 304)	EN 1.4404 (AISI 316L)		
274-2	C-type snap ring (coupling)	above 37 kW	Carbon Steel TC80		Ø75	UNI 7435
615	Loose flange		Cast Iron EN GJS 500-7 EN 1563			

EBARA Pumps Europe S.p.A. reserves the right to make changes without prior notice.

QUANTITY FOR MODEL EVMS(L)45

Pump Type	N°																											
	4	5-2	5-3	5-4	5-5	6	7	12	21	21-1	31	32-1	39-1	43-1	43-2	43-3	43-4	43-5	43-6	44-1	44-2	45	46	47	48	51	52-1	52-2
EVMS(L)45 1-1/3.0	1	/	/	1	1	1	1	1	/	1	1	1	/	1	1	/	/	1	1	/	1	4	1	1	1	/	/	1
EVMS(L)45 1-0/4.0	1	/	/	1	1	1	1	1	1	/	1	1	/	1	1	/	/	1	1	/	1	4	1	1	1	/	/	1
EVMS(L)45 2-2/5.5	1	1	/	1	1	1	1	1	/	2	1	1	/	1	2	/	/	1	1	/	1	4	1	1	1	/	/	1
EVMS(L)45 2-0/7.5	1	1	/	1	1	1	1	1	2	/	1	1	/	1	2	/	/	1	1	/	1	4	1	1	1	/	/	1
EVMS(L)45 3-2/11	1	1	1	1	1	1	1	1	1	2	1	1	/	1	2	1	1	1	1	1	1	4	1	1	1	/	1	1
EVMS(L)45 3-0/11	1	1	1	1	1	1	1	1	3	/	1	1	/	1	2	1	1	1	1	1	1	4	1	1	1	/	1	1
EVMS(L)45 4-2/15	1	2	1	1	1	1	1	1	2	2	1	1	/	1	3	1	1	1	1	1	1	4	1	1	1	/	1	1
EVMS(L)45 4-0/15	1	2	1	1	1	1	1	1	4	/	1	1	/	1	3	1	1	1	1	1	1	4	1	1	1	/	1	1
EVMS(L)45 5-2/18.5	1	3	1	1	1	1	1	1	3	2	1	1	/	1	4	1	1	1	1	1	1	4	1	1	1	/	1	1
EVMS(L)45 5-0/18.5	1	3	1	1	1	1	1	1	5	/	1	1	/	1	4	1	1	1	1	1	1	4	1	1	1	/	1	1
EVMS(L)45 6-2/22	1	4	1	1	1	1	1	1	4	2	1	1	/	1	5	1	1	1	1	1	1	4	1	1	1	/	1	1
EVMS(L)45 6-0/22	1	4	1	1	1	1	1	1	6	/	1	1	/	1	5	1	1	1	1	1	1	4	1	1	1	/	1	1
EVMS(L)45 7-2/30	1	5	1	1	1	1	1	1	5	2	1	1	/	1	6	1	1	1	1	1	1	4	1	1	1	/	1	1
EVMS(L)45 7-0/30	1	5	1	1	1	1	1	1	7	/	1	1	/	1	6	1	1	1	1	1	1	4	1	1	1	/	1	1
EVMS(L)45 8-2/30	1	6	1	1	1	1	1	1	6	2	1	1	/	1	7	1	1	1	1	1	1	4	1	1	1	/	1	1
EVMS(L)45 8-0/30	1	6	1	1	1	1	1	1	8	/	1	1	/	1	7	1	1	1	1	1	1	4	1	1	1	/	1	1
EVMS(L)45 9-2/30	1	7	1	1	1	1	1	1	7	2	1	1	/	1	8	1	1	1	1	1	1	4	1	1	1	/	1	1
EVMS(L)45 9-0/37	1	7	1	1	1	1	1	1	9	/	1	/	1	1	8	1	1	1	1	1	1	4	1	1	1	1	1	1
EVMS(L)45 10-2/37	1	8	1	1	1	1	1	1	8	2	1	/	1	1	9	1	1	1	1	1	1	4	1	1	1	1	1	1
EVMS(L)45 10-0/37	1	8	1	1	1	1	1	1	10	/	1	/	1	1	9	1	1	1	1	1	1	4	1	1	1	1	1	1
EVMS(L)45 11-2/45	1	9	1	1	1	1	1	1	9	2	1	/	1	1	10	1	1	1	1	1	1	4	1	1	1	1	1	1
EVMS(L)45 11-0/45	1	9	1	1	1	1	1	1	11	/	1	/	1	1	10	1	1	1	1	1	1	4	1	1	1	1	1	1
EVMS(L)45 12-2/45	1	9	2	1	1	1	1	1	10	2	1	/	1	1	10	2	2	1	1	2	1	4	1	1	1	1	2	1
EVMS(L)45 12-0/45	1	9	2	1	1	1	1	1	12	/	1	/	1	1	10	2	2	1	1	2	1	4	1	1	1	1	2	1
EVMS(L)45 13-2/45	1	10	2	1	1	1	1	1	11	2	1	/	1	1	11	2	2	1	1	2	1	4	1	1	1	1	2	1

shaft in EN 1.4462 (AISI 329A)

Pump Type	N°																											
	53	56	70-1	70-2	75	75-1	81	107	111-1	111-3	111-4	111-5	115-1	115-4	115-5	120-1	120-2	120-3	120-5	120-6	120-7	120-8	120-9	120-12	120-13	128-1	128-2	128-3
EVMS(L)45 1-1/3.0	1	/	/	1	2	4	1	1	1	1	1	1	2	1	1	4	2	4	/	4	/	/	4	1	4	4	4	/
EVMS(L)45 1-0/4.0	1	/	/	1	2	4	1	1	1	1	1	1	2	1	1	4	2	4	/	4	/	/	4	1	4	4	4	/
EVMS(L)45 2-2/5.5	2	/	/	1	2	4	2	2	1	1	1	1	2	1	1	4	2	4	/	4	/	/	4	1	4	4	4	4
EVMS(L)45 2-0/7.5	2	/	/	1	2	4	2	2	1	1	1	1	2	1	1	4	2	4	/	4	/	/	4	1	4	4	4	4
EVMS(L)45 3-2/11	2	/	/	1	2	4	2	3	1	1	1	1	2	1	1	4	2	4	/	4	/	/	4	1	4	4	4	4
EVMS(L)45 3-0/11	2	/	/	1	2	4	2	3	1	1	1	1	2	1	1	4	2	4	/	4	/	/	4	1	4	4	4	4
EVMS(L)45 4-2/15	4	/	/	1	2	4	3	4	1	1	1	1	2	1	1	4	2	4	/	4	/	/	4	1	4	4	4	4
EVMS(L)45 4-0/15	4	/	/	1	2	4	3	4	1	1	1	1	2	1	1	4	2	4	/	4	/	/	4	1	4	4	4	4
EVMS(L)45 5-2/18.5	5	/	/	1	2	4	4	5	1	1	1	1	2	1	1	4	2	4	/	4	/	/	4	1	4	4	4	4
EVMS(L)45 5-0/18.5	5	/	/	1	2	4	4	5	1	1	1	1	2	1	1	4	2	4	/	4	/	/	4	1	4	4	4	4
EVMS(L)45 6-2/22	6	/	/	1	2	4	5	6	1	1	1	1	2	1	1	4	2	4	/	4	/	/	4	1	4	4	4	4
EVMS(L)45 6-0/22	6	/	/	1	2	4	5	6	1	1	1	1	2	1	1	4	2	4	/	4	/	/	4	1	4	4	4	4
EVMS(L)45 7-2/30	7	/	/	1	2	4	6	7	1	1	1	1	2	1	1	4	2	4	/	4	/	/	4	1	4	4	4	4
EVMS(L)45 7-0/30	7	/	/	1	2	4	6	7	1	1	1	1	2	1	1	4	2	4	/	4	/	/	4	1	4	4	4	4
EVMS(L)45 8-2/30	8	/	/	1	2	4	7	8	1	1	1	1	2	1	1	4	2	4	/	4	/	/	4	1	4	4	4	4
EVMS(L)45 8-0/30	8	/	/	1	2	4	7	8	1	1	1	1	2	1	1	4	2	4	/	4	/	/	4	1	4	4	4	4
EVMS(L)45 9-2/30	9	/	/	1	2	4	8	9	1	1	1	1	2	1	1	4	2	4	/	4	/	/	4	1	4	4	4	4
EVMS(L)45 9-0/37	9	1	1	1	2	4	8	9	1	1	1	1	2	1	1	4	2	4	4	2	3	4	4	1	4	4	4	4
EVMS(L)45 10-2/37	10	1	1	1	2	4	9	10	1	1	1	1	2	1	1	4	2	4	4	2	3	4	4	1	4	4	4	4
EVMS(L)45 10-0/37	10	1	1	1	2	4	9	10	1	1	1	1	2	1	1	4	2	4	4	2	3	4	4	1	4	4	4	4
EVMS(L)45 11-2/45	11	1	1	1	2	4	10	11	1	1	1	1	2	1	1	4	2	4	4	2	3	4	4	1	8	4	4	8
EVMS(L)45 11-0/45	11	1	1	1	2	4	10	11	1	1	1	1	2	1	1	4	2	4	4	2	3	4	4	1	8	4	4	8
EVMS(L)45 12-2/45	11	1	1	1	2	4	10	12	1	1	1	1	2	1	1	4	2	4	4	2	3	4	4	1	8	4	4	8
EVMS(L)45 12-0/45	11	1	1	1	2	4	10	12	1	1	1	1	2	1	1	4	2	4	4	2	3	4	4	1	8	4	4	8
EVMS(L)45 13-2/45	12	1	1	1	2	4	11	13	1	1	1	1	2	1	1	4	2	4	4	2	3	4	4	1	8	4	4	8

EBARA Pumps Europe S.p.A. reserves the right to make changes without prior notice.

QUANTITY FOR MODEL EVMS(L)45

Pump Type	N°																											
	128-6	130-1	130-2	130-4	131-1	131-2	135-1	135-2	135-3	135-4	135-5	135-6	137-1	137-2	140	140-1	140-2	150	160	162	212	212-1	212-2	212-3	245	273-1	274-2	615
EVMS(L)45 1-1/3.0	4	3	4	/	1	1	4	2	/	/	1	4	1	1	2	/	/	/	1	1	1	4	1	1	2	4	/	2
EVMS(L)45 1-0/4.0	4	3	4	/	1	1	4	2	/	/	1	4	1	1	2	/	/	/	1	1	1	4	1	1	2	4	/	2
EVMS(L)45 2-2/5.5	/	3	4	/	1	1	4	2	/	/	1	/	1	1	2	/	/	/	1	1	1	4	1	1	2	4	/	2
EVMS(L)45 2-0/7.5	/	3	4	/	1	1	4	2	/	/	1	/	1	1	2	/	/	/	1	1	1	4	1	1	2	4	/	2
EVMS(L)45 3-2/11	/	3	4	/	1	1	4	2	/	/	1	/	1	1	2	/	/	/	1	1	1	4	1	1	2	4	/	2
EVMS(L)45 3-0/11	/	3	4	/	1	1	4	2	/	/	1	/	1	1	2	/	/	/	1	1	1	4	1	1	2	4	/	2
EVMS(L)45 4-2/15	/	3	4	/	1	1	4	2	/	/	1	/	1	1	2	/	/	/	1	1	1	4	1	1	2	4	/	2
EVMS(L)45 4-0/15	/	3	4	/	1	1	4	2	/	/	1	/	1	1	2	/	/	/	1	1	1	4	1	1	2	4	/	2
EVMS(L)45 5-2/18.5	/	3	4	/	1	1	4	2	/	/	1	/	1	1	2	/	/	/	1	1	1	4	1	1	2	4	/	2
EVMS(L)45 5-0/18.5	/	3	4	/	1	1	4	2	/	/	1	/	1	1	2	/	/	/	1	1	1	4	1	1	2	4	/	2
EVMS(L)45 6-2/22	/	3	4	/	1	1	4	2	/	/	1	/	1	1	2	/	/	/	1	1	1	4	1	1	2	4	/	2
EVMS(L)45 6-0/22	/	3	4	/	1	1	4	2	/	/	1	/	1	1	2	/	/	/	1	1	1	4	1	1	2	4	/	2
EVMS(L)45 7-2/30	/	3	4	/	1	1	4	2	/	/	1	/	1	1	2	/	/	/	1	1	1	4	1	1	2	4	/	2
EVMS(L)45 7-0/30	/	3	4	/	1	1	4	2	/	/	1	/	1	1	2	/	/	/	1	1	1	4	1	1	2	4	/	2
EVMS(L)45 8-2/30	/	3	4	/	1	1	4	2	/	/	1	/	1	1	2	/	/	/	1	1	1	4	1	1	2	4	/	2
EVMS(L)45 8-0/30	/	3	4	/	1	1	4	2	/	/	1	/	1	1	2	/	/	/	1	1	1	4	1	1	2	4	/	2
EVMS(L)45 9-2/30	/	3	4	/	1	1	4	2	/	/	1	/	1	1	2	/	/	/	1	1	1	4	1	1	2	4	/	2
EVMS(L)45 9-0/37	/	3	4	1	1	1	4	2	4	3	1	/	1	1	/	1	1	1	1	1	1	4	1	1	2	4	1	2
EVMS(L)45 10-2/37	/	3	4	1	1	1	4	2	4	3	1	/	1	1	/	1	1	1	1	1	1	4	1	1	2	4	1	2
EVMS(L)45 10-0/37	/	3	4	1	1	1	4	2	4	3	1	/	1	1	/	1	1	1	1	1	1	4	1	1	2	4	1	2
EVMS(L)45 11-2/45	/	3	4	1	1	1	4	2	4	3	1	/	1	1	/	1	1	1	1	1	1	4	1	1	2	4	1	2
EVMS(L)45 11-0/45	/	3	4	1	1	1	4	2	4	3	1	/	1	1	/	1	1	1	1	1	1	4	1	1	2	4	1	2
EVMS(L)45 12-2/45	/	3	4	1	1	1	4	2	4	3	1	/	1	1	/	1	1	1	1	1	1	4	1	1	2	4	1	2
EVMS(L)45 12-0/45	/	3	4	1	1	1	4	2	4	3	1	/	1	1	/	1	1	1	1	1	1	4	1	1	2	4	1	2
EVMS(L)45 13-2/45	/	3	4	1	1	1	4	2	4	3	1	/	1	1	/	1	1	1	1	1	1	4	1	1	2	4	1	2

BEARINGS EVMS(L)45

Pump Type	N° 56
EVMS(L)45 1-1/3.0	/
EVMS(L)45 1-0/4.0	/
EVMS(L)45 2-2/5.5	/
EVMS(L)45 2-0/7.5	/
EVMS(L)45 3-2/11	/
EVMS(L)45 3-0/11	/
EVMS(L)45 4-2/15	/
EVMS(L)45 4-0/15	/
EVMS(L)45 5-2/18.5	/
EVMS(L)45 5-0/18.5	/
EVMS(L)45 6-2/22	/
EVMS(L)45 6-0/22	/
EVMS(L)45 7-2/30	/
EVMS(L)45 7-0/30	/
EVMS(L)45 8-2/30	/
EVMS(L)45 8-0/30	/
EVMS(L)45 9-2/30	/
EVMS(L)45 9-0/37	6315 ZZ C3
EVMS(L)45 10-2/37	6315 ZZ C3
EVMS(L)45 10-0/37	6315 ZZ C3
EVMS(L)45 11-2/45	6315 ZZ C3
EVMS(L)45 11-0/45	6315 ZZ C3
EVMS(L)45 12-2/45	6315 ZZ C3
EVMS(L)45 12-0/45	6315 ZZ C3
EVMS(L)45 13-2/45	6315 ZZ C3

EBARA Pumps Europe S.p.A. reserves the right to make changes without prior notice.

PERFORMANCE CURVE
EVMSG45

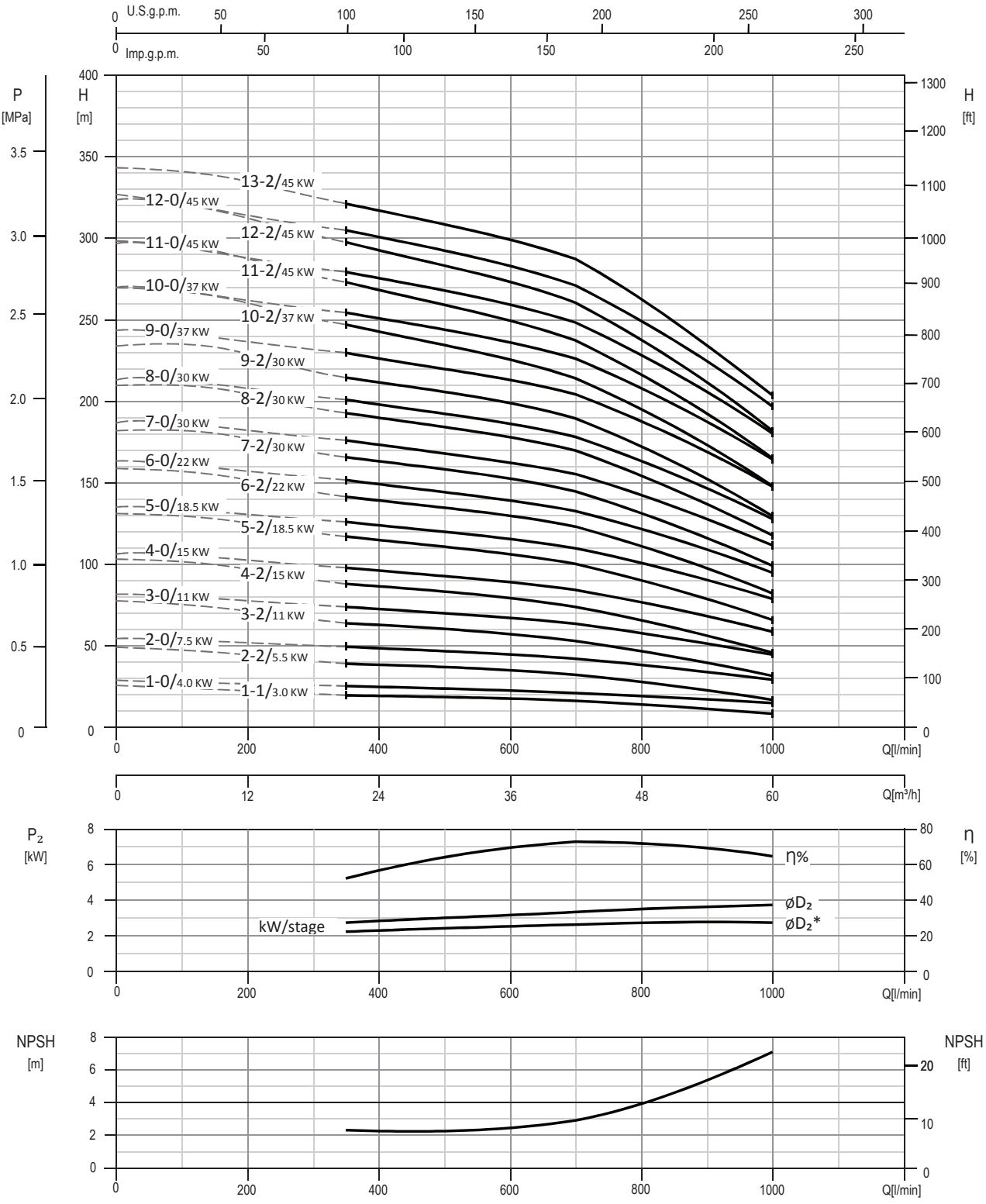

Test standard: ISO 9906:2012 - Grade 3B

EBARA Pumps Europe S.p.A. reserves the right to make changes without prior notice.

TECHNICAL DATA
EVMSG45

Dimensional sketch

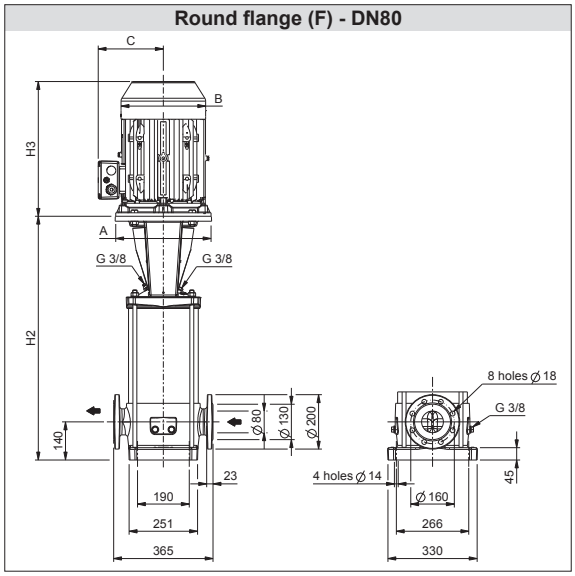

Dimensions [mm] and Weights [Kg]

Pump Type	Pmax [MPa]	Motor					Round flange (F)			
		kW	Size	A Ø	B	C	H2	H2+H3	Weight Pump	Weight Pump + Motor
EVMSG45 1-1/3.0	1.6	3.0	100	160	176	123	546	888	60.2	82.2
EVMSG45 1-0/4.0	1.6	4.0	112	160	193	138	546	910	60.2	88.7
EVMSG45 2-2/5.5	1.6	5.5	132	300	220	152	722	1121	75.6	114.6
EVMSG45 2-0/7.5	1.6	7.5	132	300	220	152	722	1141	75.6	121.6
EVMSG45 3-2/11	1.6	11	160	350	259	180	824	1263	87.7	150.2
EVMSG45 3-0/11	1.6	11	160	350	259	180	824	1263	87.7	150.2
EVMSG45 4-2/15	1.6	15	160	350	311	240	896	1391	94.3	195.3
EVMSG45 4-0/15	1.6	15	160	350	311	240	896	1391	94.3	195.3
EVMSG45 5-2/18.5	1.6	18.5	160	350	311	240	968	1463	99.5	208.5
EVMSG45 5-0/18.5	1.6	18.5	160	350	311	240	968	1463	99.6	208.6
EVMSG45 6-2/22	2.5	22	180	350	354	260	1040	1592	105.0	240.0
EVMSG45 6-0/22	2.5	22	180	350	354	260	1040	1592	105.0	240.0
EVMSG45 7-2/30	2.5	30	200	400	354	280	1112	1664	115.6	283.6
EVMSG45 7-0/30	2.5	30	200	400	354	280	1112	1664	115.6	283.6
EVMSG45 8-2/30	2.5	30	200	400	354	280	1184	1736	120.9	288.9
EVMSG45 8-0/30	2.5	30	200	400	354	280	1184	1736	120.9	288.9
EVMSG45 9-2/30	2.5	30	200	400	354	280	1256	1808	126.4	294.4
EVMSG45 9-0/37	2.5	37	200	400	382	295	1273	1950	137.8	397.8
EVMSG45 10-2/37	3.5	37	200	400	382	295	1345	2022	143.1	403.1
EVMSG45 10-0/37	3.5	37	200	400	382	295	1345	2022	143.1	403.1
EVMSG45 11-2/45	3.5	45	225	450	449	335	1417	2183	153.9	527.9
EVMSG45 11-0/45	3.5	45	225	450	449	335	1417	2183	153.9	527.9
EVMSG45 12-2/45	3.5	45	225	450	449	335	1489	2255	159.2	533.2
EVMSG45 12-0/45	3.5	45	225	450	449	335	1489	2255	159.2	533.2
EVMSG45 13-2/45	3.5	45	225	450	449	335	1561	2327	164.5	538.5

1.6 MPa=16 bar; 2.5 MPa=25 bar; 3.5 MPa=35 bar

EBARA
EBARA Pumps Europe
EBARA Pumps Europe S.p.A. reserves the right to make changes without prior notice.

SECTIONAL VIEW
EVMSG45

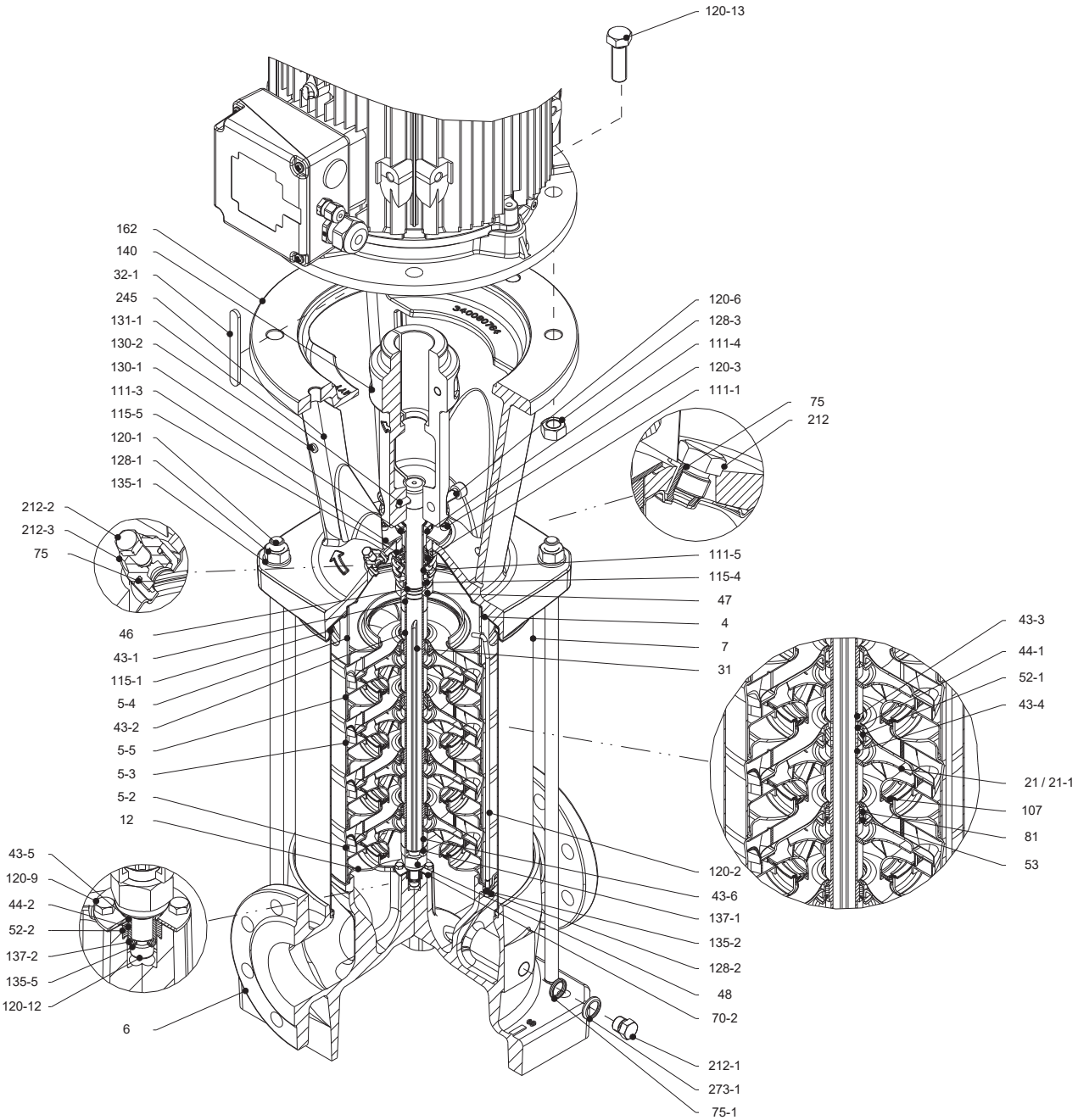

Pump without ball bearing
up to 30 kW

EBARA Pumps Europe S.p.A. reserves the right to make changes without prior notice.

SECTIONAL VIEW
EVMSG45

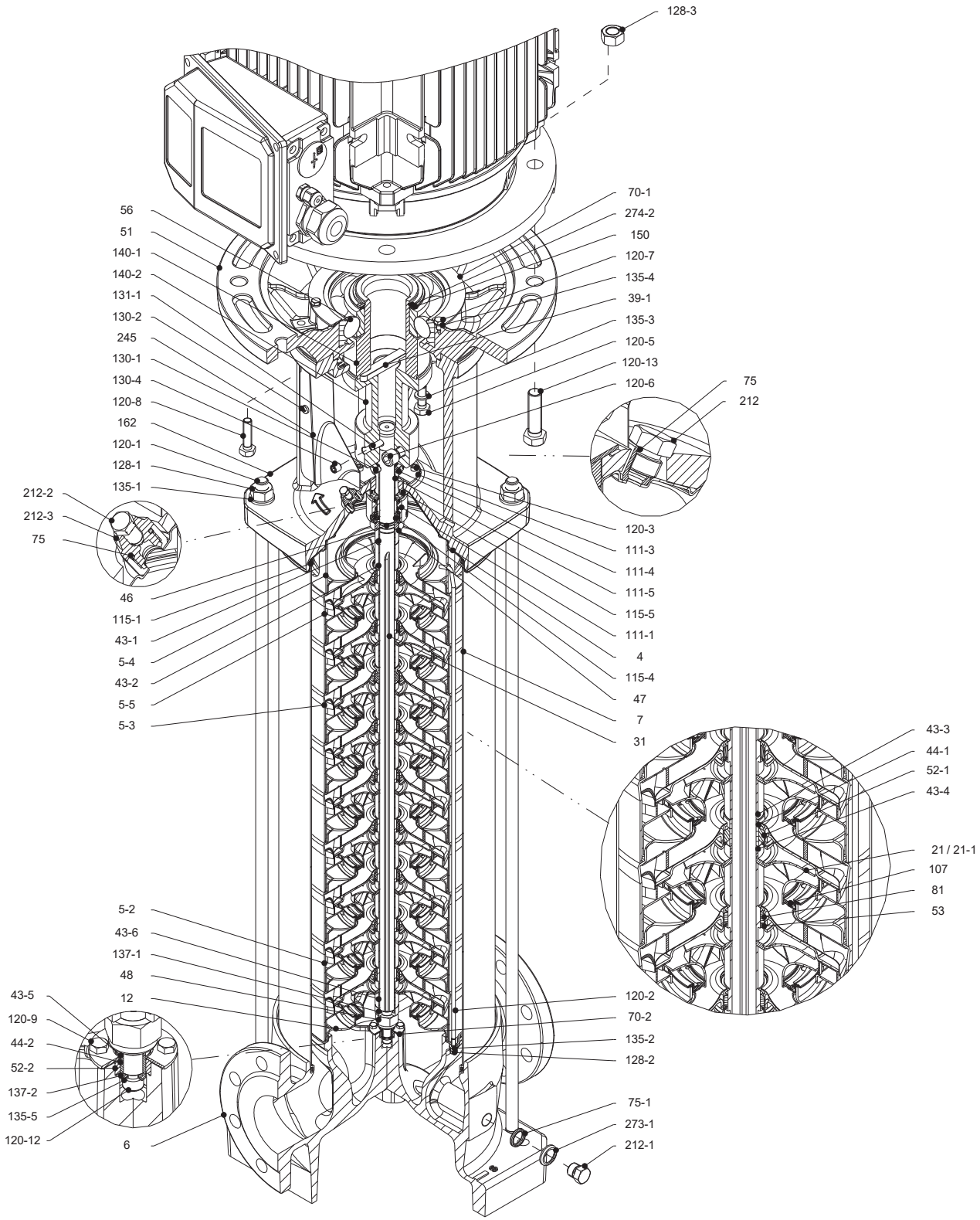

Pump with single ball bearing
above 37 kW

EBARA
EBARA Pumps Europe
EBARA Pumps Europe S.p.A. reserves the right to make changes without prior notice.

SECTIONAL TABLE
EVMSG45

N°	PART NAME		MATERIAL EVMSG	DIMENSIONS	STANDARD
4	Casing cover		EN 1.4301 (AISI 304)		
5-2	Intermediate casing		EN 1.4301 (AISI 304)		
5-3	Intermediate casing with bearing		EN 1.4301 (AISI 304)		
5-4	Discharge casing		EN 1.4301 (AISI 304)		
5-5	Top intermediate casing		EN 1.4301 (AISI 304)		
6	Bottom casing		Cast Iron EN GJL-250 EN 1561 Cast Iron EN GJS 400-15 EN 1563		
7	Outer casing		EN 1.4301 (AISI 304)		
12	Suction cover		EN 1.4301 (AISI 304)		
21	Impeller		EN 1.4301 (AISI 304)		
21-1	Reduced impeller		EN 1.4301 (AISI 304)		
31	Shaft		EN 1.4301 (AISI 304)		
32-1	Adjuster key		EN 1.4301 (AISI 304)		
39-1	Coupling key	above 37 kW	Carbon Steel		
43-1	Shaft sleeve (mechanical seal)		EN 1.4301 (AISI 304)		
43-2	Shaft sleeve (intermediate)		EN 1.4301 (AISI 304)		
43-3	Shaft sleeve (bearing)		EN 1.4301 (AISI 304)		
43-4	Shaft sleeve (adjustment)		EN 1.4301 (AISI 304)		
43-5	Shaft sleeve (last stage)		EN 1.4301 (AISI 304)		
43-6	Shaft sleeve (adjustment)		EN 1.4301 (AISI 304)		
44-1	Shaft sleeve bearing		Tungsten carbride		
44-2	Shaft sleeve (bearing)		Tungsten carbride		
46	Ring (mechanical seal)		EN 1.4404 (AISI 316L)		
47	Ring holder		EN 1.4301 (AISI 304)		
48	Impeller nut		EN 1.4301 (AISI 304) with inox insert		
51	Motor adapter	above 37 kW	Cast Iron EN GJL250 EN 1561		
52-1	Sleeve bearing		Tungsten carbride		
52-2	Bearing sleeve (bottom casing)		Tungsten carbride		
53	Bush holder		EN 1.4301 (AISI 304)		
56	Ball bearing	above 37 kW	see table page 119		
70-1	Ring for ball bearing	above 37 kW	EN 1.4301 (AISI 304)		
70-2	Ring for bearing sleeve		EN 1.4301 (AISI 304)		
75	O-Ring (priming plug)		EPDM / FPM	Ø12.37x2.62	OR 3050
75-1	O-Ring (drainage plug)		EPDM / FPM		
81	Bush		PTFE		
107	Liner ring		EN 1.4301 (AISI 304) + PPS		
111-1	Mechanical seal		see pages 6-7		
111-3	Mechanical seal flange		EN 1.4301 (AISI 304)		
111-4	Seal holder		EN 1.4404 (AISI 316L)		
111-5	Mechanical seal cartridge sleeve		EN 1.4301 (AISI 304)		
115-1	O-Ring (outer casing)		EPDM / FPM	Ø240.66x5.34	OR 6945
115-4	O-Ring (cartridge sleeve)		EPDM / FPM	Ø23.39x3.53	OR 4093
115-5	O-Ring (seal flange)		EPDM / FPM	Ø44.04x3.53	OR 4175
120-1	Tie rod		EN 1.4057 (AISI 431)		
120-2	Tie rod (stage)		EN 1.4301 (AISI 304)		
120-3	Screw (seal flange)		A2-70	M5x12	ISO 4762
120-5	Screw (extension coupling)	above 37 kW	Galvanized steel 8.8 strength class ISO 898/1	M10x30	ISO 4017

EBARA Pumps Europe S.p.A. reserves the right to make changes without prior notice.

SECTIONAL TABLE
EVMSG45

N°	PART NAME		MATERIAL EVMSG	DIMENSIONS	STANDARD
120-6	Screw (pump coupling)	up to 4.0 kW	Galvanized steel 8.8 strength class ISO 898/1	M6x25	ISO 4762
		from 5.5 kW to 7.5 kW	Galvanized steel 8.8 strength class ISO 898/1	M8x25	ISO 4762
		from 11 kW to 30 kW	Galvanized steel 8.8 strength class ISO 898/1	M10x30	ISO 4762
		above 37 kW	Galvanized steel 8.8 strength class ISO 898/1	M12x30	ISO 4762
120-7	Screw (ball bearing)	above 37 kW	Galvanized steel 8.8 strength class ISO 898/1	M6x10	ISO 4017
120-8	Screw (motor adapter)	above 37 kW	Galvanized steel 8.8 strength class ISO 898/1	M10x40	ISO 4017
120-9	Screw (bottom casing)		A2-70	M5x8	ISO 4017
120-12	Screw (shaft)		A2-70	M6x16	ISO 4762
120-13	Screw for motor	MEC 100-112	Galvanized steel 8.8 strength class ISO 898/1	M8x20	ISO 4017
		MEC 132	Galvanized steel 8.8 strength class ISO 898/1	M12x45	ISO 4017
		MEC 160-180	Galvanized steel 8.8 strength class ISO 898/1	M16x50	ISO 4017
		MEC 200-225	Galvanized steel 8.8 strength class ISO 898/1	M16x60	ISO 4014
128-1	Nut (tie rod)		A2-70 UNI 7323 with	M16	ISO 4032
128-2	Nut (casing tie rod)		A2-70	M5	ISO 4032
128-3	Nut (motor)	MEC 132	Galvanized steel	M12	ISO 4032
		MEC 160-180-200-225	Galvanized steel	M16	ISO 4032
128-6	Nut (aluminium coupling)	MEC 100-112	Galvanized steel	M6	ISO 4032
130-1	Set screw		EN 1.4301 (AISI 304)	M6x8	ISO 4026
130-2	Screw for coupling guard		A2-70	M5x6	UNI 7687
130-4	Set screw (pump coupling)	above 37 kW	Galvanized steel	M10x10	ISO 4026
131-1	Pin for shaft	up to 4.0 kW	Carbon Steel	Ø8x42	ISO 2338
		above 5.5 kW	Carbon Steel	Ø8X50	ISO 2338
135-1	Washer (tie rod)		EN 1.4301 (AISI 304)	Ø16	ISO 7089
135-2	Washer (casing tie rod)		EN 1.4301 (AISI 304)	Ø5,1	UNI 1751
135-3	Washer (extension coupling)	above 37 kW	Galvanized steel	Ø10,2	UNI 1751
135-4	Washer (ball bearing)	above 37 kW	Plated carbon steel	Ø6,1	UNI 1751
135-5	Washer (impeller nut)		EN 1.4301 (AISI 304)		
135-6	Washer (aluminium coupling)	up to 4.0 kW	Carbon Steel		
137-1	Impeller spacer		EN 1.4301 (AISI 304)		
137-2	Shaft spacer		EN 1.4301 (AISI 304)		
140	Coupling	up to 4.0 kW	Die cast Aluminium EN AB-AISI11 Cu2 (Fe)		
		from 5.5 kW to 30 kW	Cast Iron EN GJL250 EN 1561		
140-1	Extension coupling	above 37 kW	Carbon Steel		
140-2	Coupling	above 37 kW	Carbon Steel		
150	Spacer (snap ring)	above 37 kW	Carbon Steel		
162	Motor bracket	up to 30 kW	Cast Iron EN GJS 400-15 EN 1563		
212	Priming plug		EN 1.4301 (AISI 304)		
212-1	Drainage plug		EN 1.4301 (AISI 304)		
212-2	Venting plug		EN 1.4401 (AISI 316)		
212-3	Priming plug		EN 1.4301 (AISI 304)		
245	Coupling guard		EN 1.4301 (AISI 304)		
273-1	Washer (drainage plug)		EN 1.4301 (AISI 304)		
274-2	C-type snap ring (coupling)	above 37 kW	Carbon Steel TC80	Ø75	UNI 7435

EBARA Pumps Europe S.p.A. reserves the right to make changes without prior notice.

QUANTITY FOR MODEL EVMSG45

Pump Type	N°																											
	4	5-2	5-3	5-4	5-5	6	7	12	21	21-1	31	32-1	39-1	43-1	43-2	43-3	43-4	43-5	43-6	44-1	44-2	46	47	48	51	52-1	52-2	53
EVMSG45 1-1/3.0	1	/	/	1	1	1	1	1	/	1	1	1	/	1	1	/	/	1	1	/	1	1	1	1	/	/	1	1
EVMSG45 1-0/4.0	1	/	/	1	1	1	1	1	1	/	1	1	/	1	1	/	/	1	1	/	1	1	1	1	/	/	1	1
EVMSG45 2-2/5.5	1	1	/	1	1	1	1	1	/	2	1	1	/	1	2	/	/	1	1	/	1	1	1	1	/	/	1	2
EVMSG45 2-0/7.5	1	1	/	1	1	1	1	1	2	/	1	1	/	1	2	/	/	1	1	/	1	1	1	1	/	/	1	2
EVMSG45 3-2/11	1	1	1	1	1	1	1	1	1	2	1	1	/	1	2	1	1	1	1	1	1	1	1	1	/	1	1	2
EVMSG45 3-0/11	1	1	1	1	1	1	1	1	3	/	1	1	/	1	2	1	1	1	1	1	1	1	1	1	/	1	1	2
EVMSG45 4-2/15	1	2	1	1	1	1	1	1	2	2	1	1	/	1	3	1	1	1	1	1	1	1	1	1	/	1	1	4
EVMSG45 4-0/15	1	2	1	1	1	1	1	1	4	/	1	1	/	1	3	1	1	1	1	1	1	1	1	1	/	1	1	4
EVMSG45 5-2/18.5	1	3	1	1	1	1	1	1	3	2	1	1	/	1	4	1	1	1	1	1	1	1	1	1	/	1	1	5
EVMSG45 5-0/18.5	1	3	1	1	1	1	1	1	5	/	1	1	/	1	4	1	1	1	1	1	1	1	1	1	/	1	1	5
EVMSG45 6-2/22	1	4	1	1	1	1	1	1	4	2	1	1	/	1	5	1	1	1	1	1	1	1	1	1	/	1	1	6
EVMSG45 6-0/22	1	4	1	1	1	1	1	1	6	/	1	1	/	1	5	1	1	1	1	1	1	1	1	1	/	1	1	6
EVMSG45 7-2/30	1	5	1	1	1	1	1	1	5	2	1	1	/	1	6	1	1	1	1	1	1	1	1	1	/	1	1	7
EVMSG45 7-0/30	1	5	1	1	1	1	1	1	7	/	1	1	/	1	6	1	1	1	1	1	1	1	1	1	/	1	1	7
EVMSG45 8-2/30	1	6	1	1	1	1	1	1	6	2	1	1	/	1	7	1	1	1	1	1	1	1	1	1	/	1	1	8
EVMSG45 8-0/30	1	6	1	1	1	1	1	1	8	/	1	1	/	1	7	1	1	1	1	1	1	1	1	1	/	1	1	8
EVMSG45 9-2/30	1	7	1	1	1	1	1	1	7	2	1	1	/	1	8	1	1	1	1	1	1	1	1	1	/	1	1	9
EVMSG45 9-0/37	1	7	1	1	1	1	1	1	9	/	1	/	1	1	8	1	1	1	1	1	1	1	1	1	1	1	1	9
EVMSG45 10-2/37	1	8	1	1	1	1	1	1	8	2	1	/	1	1	9	1	1	1	1	1	1	1	1	1	1	1	1	10
EVMSG45 10-0/37	1	8	1	1	1	1	1	1	10	/	1	/	1	1	9	1	1	1	1	1	1	1	1	1	1	1	1	10
EVMSG45 11-2/45	1	9	1	1	1	1	1	1	9	2	1	/	1	1	10	1	1	1	1	1	1	1	1	1	1	1	1	11
EVMSG45 11-0/45	1	9	1	1	1	1	1	1	11	/	1	/	1	1	10	1	1	1	1	1	1	1	1	1	1	1	1	11
EVMSG45 12-2/45	1	9	2	1	1	1	1	1	10	2	1	/	1	1	10	2	2	1	1	2	1	1	1	1	1	2	1	11
EVMSG45 12-0/45	1	9	2	1	1	1	1	1	12	/	1	/	1	1	10	2	2	1	1	2	1	1	1	1	1	2	1	11
EVMSG45 13-2/45	1	10	2	1	1	1	1	1	11	2	1	/	1	1	11	2	2	1	1	2	1	1	1	1	1	2	1	12

shaft in EN 1.4462 (AISI 329A)

Pump Type	N°																											
	56	70-1	70-2	75	75-1	81	107	111-1	111-3	111-4	111-5	115-1	115-4	115-5	120-1	120-2	120-3	120-5	120-6	120-7	120-8	120-9	120-12	120-13	128-1	128-2	128-3	128-6
EVMSG45 1-1/3.0	/	/	1	2	4	1	1	1	1	1	1	2	1	1	4	2	4	/	4	/	/	4	1	4	4	4	/	4
EVMSG45 1-0/4.0	/	/	1	2	4	1	1	1	1	1	1	2	1	1	4	2	4	/	4	/	/	4	1	4	4	4	/	4
EVMSG45 2-2/5.5	/	/	1	2	4	2	2	1	1	1	1	2	1	1	4	2	4	/	4	/	/	4	1	4	4	4	4	/
EVMSG45 2-0/7.5	/	/	1	2	4	2	2	1	1	1	1	2	1	1	4	2	4	/	4	/	/	4	1	4	4	4	4	/
EVMSG45 3-2/11	/	/	1	2	4	2	3	1	1	1	1	2	1	1	4	2	4	/	4	/	/	4	1	4	4	4	4	/
EVMSG45 3-0/11	/	/	1	2	4	2	3	1	1	1	1	2	1	1	4	2	4	/	4	/	/	4	1	4	4	4	4	/
EVMSG45 4-2/15	/	/	1	2	4	3	4	1	1	1	1	2	1	1	4	2	4	/	4	/	/	4	1	4	4	4	4	/
EVMSG45 4-0/15	/	/	1	2	4	3	4	1	1	1	1	2	1	1	4	2	4	/	4	/	/	4	1	4	4	4	4	/
EVMSG45 5-2/18.5	/	/	1	2	4	4	5	1	1	1	1	2	1	1	4	2	4	/	4	/	/	4	1	4	4	4	4	/
EVMSG45 5-0/18.5	/	/	1	2	4	4	5	1	1	1	1	2	1	1	4	2	4	/	4	/	/	4	1	4	4	4	4	/
EVMSG45 6-2/22	/	/	1	2	4	5	6	1	1	1	1	2	1	1	4	2	4	/	4	/	/	4	1	4	4	4	4	/
EVMSG45 6-0/22	/	/	1	2	4	5	6	1	1	1	1	2	1	1	4	2	4	/	4	/	/	4	1	4	4	4	4	/
EVMSG45 7-2/30	/	/	1	2	4	6	7	1	1	1	1	2	1	1	4	2	4	/	4	/	/	4	1	4	4	4	4	/
EVMSG45 7-0/30	/	/	1	2	4	6	7	1	1	1	1	2	1	1	4	2	4	/	4	/	/	4	1	4	4	4	4	/
EVMSG45 8-2/30	/	/	1	2	4	7	8	1	1	1	1	2	1	1	4	2	4	/	4	/	/	4	1	4	4	4	4	/
EVMSG45 8-0/30	/	/	1	2	4	7	8	1	1	1	1	2	1	1	4	2	4	/	4	/	/	4	1	4	4	4	4	/
EVMSG45 9-2/30	/	/	1	2	4	8	9	1	1	1	1	2	1	1	4	2	4	/	4	/	/	4	1	4	4	4	4	/
EVMSG45 9-0/37	1	1	1	2	4	8	9	1	1	1	1	2	1	1	4	2	4	4	2	3	4	4	1	4	4	4	4	/
EVMSG45 10-2/37	1	1	1	2	4	9	10	1	1	1	1	2	1	1	4	2	4	4	2	3	4	4	1	4	4	4	4	/
EVMSG45 10-0/37	1	1	1	2	4	9	10	1	1	1	1	2	1	1	4	2	4	4	2	3	4	4	1	4	4	4	4	/
EVMSG45 11-2/45	1	1	1	2	4	10	11	1	1	1	1	2	1	1	4	2	4	4	2	3	4	4	1	8	4	4	8	/
EVMSG45 11-0/45	1	1	1	2	4	10	11	1	1	1	1	2	1	1	4	2	4	4	2	3	4	4	1	8	4	4	8	/
EVMSG45 12-2/45	1	1	1	2	4	10	12	1	1	1	1	2	1	1	4	2	4	4	2	3	4	4	1	8	4	4	8	/
EVMSG45 12-0/45	1	1	1	2	4	10	12	1	1	1	1	2	1	1	4	2	4	4	2	3	4	4	1	8	4	4	8	/
EVMSG45 13-2/45	1	1	1	2	4	11	13	1	1	1	1	2	1	1	4	2	4	4	2	3	4	4	1	8	4	4	8	/

EBARA Pumps Europe S.p.A. reserves the right to make changes without prior notice.

QUANTITY FOR MODEL EVMSG45

Pump Type	N°																							
	130-1	130-2	130-4	131-1	135-1	135-2	135-3	135-4	135-5	135-6	137-1	137-2	140	140-1	140-2	150	162	212	212-1	212-2	212-3	245	273-1	274-2
EVMSG45 1-1/3.0	3	4	/	1	4	2	/	/	1	4	1	1	2	/	/	/	1	1	4	1	1	2	4	/
EVMSG45 1-0/4.0	3	4	/	1	4	2	/	/	1	4	1	1	2	/	/	/	1	1	4	1	1	2	4	/
EVMSG45 2-2/5.5	3	4	/	1	4	2	/	/	1	/	1	1	2	/	/	/	1	1	4	1	1	2	4	/
EVMSG45 2-0/7.5	3	4	/	1	4	2	/	/	1	/	1	1	2	/	/	/	1	1	4	1	1	2	4	/
EVMSG45 3-2/11	3	4	/	1	4	2	/	/	1	/	1	1	2	/	/	/	1	1	4	1	1	2	4	/
EVMSG45 3-0/11	3	4	/	1	4	2	/	/	1	/	1	1	2	/	/	/	1	1	4	1	1	2	4	/
EVMSG45 4-2/15	3	4	/	1	4	2	/	/	1	/	1	1	2	/	/	/	1	1	4	1	1	2	4	/
EVMSG45 4-0/15	3	4	/	1	4	2	/	/	1	/	1	1	2	/	/	/	1	1	4	1	1	2	4	/
EVMSG45 5-2/18.5	3	4	/	1	4	2	/	/	1	/	1	1	2	/	/	/	1	1	4	1	1	2	4	/
EVMSG45 5-0/18.5	3	4	/	1	4	2	/	/	1	/	1	1	2	/	/	/	1	1	4	1	1	2	4	/
EVMSG45 6-2/22	3	4	/	1	4	2	/	/	1	/	1	1	2	/	/	/	1	1	4	1	1	2	4	/
EVMSG45 6-0/22	3	4	/	1	4	2	/	/	1	/	1	1	2	/	/	/	1	1	4	1	1	2	4	/
EVMSG45 7-2/30	3	4	/	1	4	2	/	/	1	/	1	1	2	/	/	/	1	1	4	1	1	2	4	/
EVMSG45 7-0/30	3	4	/	1	4	2	/	/	1	/	1	1	2	/	/	/	1	1	4	1	1	2	4	/
EVMSG45 8-2/30	3	4	/	1	4	2	/	/	1	/	1	1	2	/	/	/	1	1	4	1	1	2	4	/
EVMSG45 8-0/30	3	4	/	1	4	2	/	/	1	/	1	1	2	/	/	/	1	1	4	1	1	2	4	/
EVMSG45 9-2/30	3	4	/	1	4	2	/	/	1	/	1	1	2	/	/	/	1	1	4	1	1	2	4	/
EVMSG45 9-0/37	3	4	1	1	4	2	4	3	1	/	1	1	/	1	1	1	1	1	4	1	1	2	4	1
EVMSG45 10-2/37	3	4	1	1	4	2	4	3	1	/	1	1	/	1	1	1	1	1	4	1	1	2	4	1
EVMSG45 10-0/37	3	4	1	1	4	2	4	3	1	/	1	1	/	1	1	1	1	1	4	1	1	2	4	1
EVMSG45 11-2/45	3	4	1	1	4	2	4	3	1	/	1	1	/	1	1	1	1	1	4	1	1	2	4	1
EVMSG45 11-0/45	3	4	1	1	4	2	4	3	1	/	1	1	/	1	1	1	1	1	4	1	1	2	4	1
EVMSG45 12-2/45	3	4	1	1	4	2	4	3	1	/	1	1	/	1	1	1	1	1	4	1	1	2	4	1
EVMSG45 12-0/45	3	4	1	1	4	2	4	3	1	/	1	1	/	1	1	1	1	1	4	1	1	2	4	1
EVMSG45 13-2/45	3	4	1	1	4	2	4	3	1	/	1	1	/	1	1	1	1	1	4	1	1	2	4	1

BEARINGS EVMSG45

Pump Type	N° 56
EVMSG45 1-1/3.0	/
EVMSG45 1-0/4.0	/
EVMSG45 2-2/5.5	/
EVMSG45 2-0/7.5	/
EVMSG45 3-2/11	/
EVMSG45 3-0/11	/
EVMSG45 4-2/15	/
EVMSG45 4-0/15	/
EVMSG45 5-2/18.5	/
EVMSG45 5-0/18.5	/
EVMSG45 6-2/22	/
EVMSG45 6-0/22	/
EVMSG45 7-2/30	/
EVMSG45 7-0/30	/
EVMSG45 8-2/30	/
EVMSG45 8-0/30	/
EVMSG45 9-2/30	/
EVMSG45 9-0/37	6315 ZZ C3
EVMSG45 10-2/37	6315 ZZ C3
EVMSG45 10-0/37	6315 ZZ C3
EVMSG45 11-2/45	6315 ZZ C3
EVMSG45 11-0/45	6315 ZZ C3
EVMSG45 12-2/45	6315 ZZ C3
EVMSG45 12-0/45	6315 ZZ C3
EVMSG45 13-2/45	6315 ZZ C3

EBARA Pumps Europe S.p.A. reserves the right to make changes without prior notice.

PERFORMANCE CURVE
EVMS(L)64

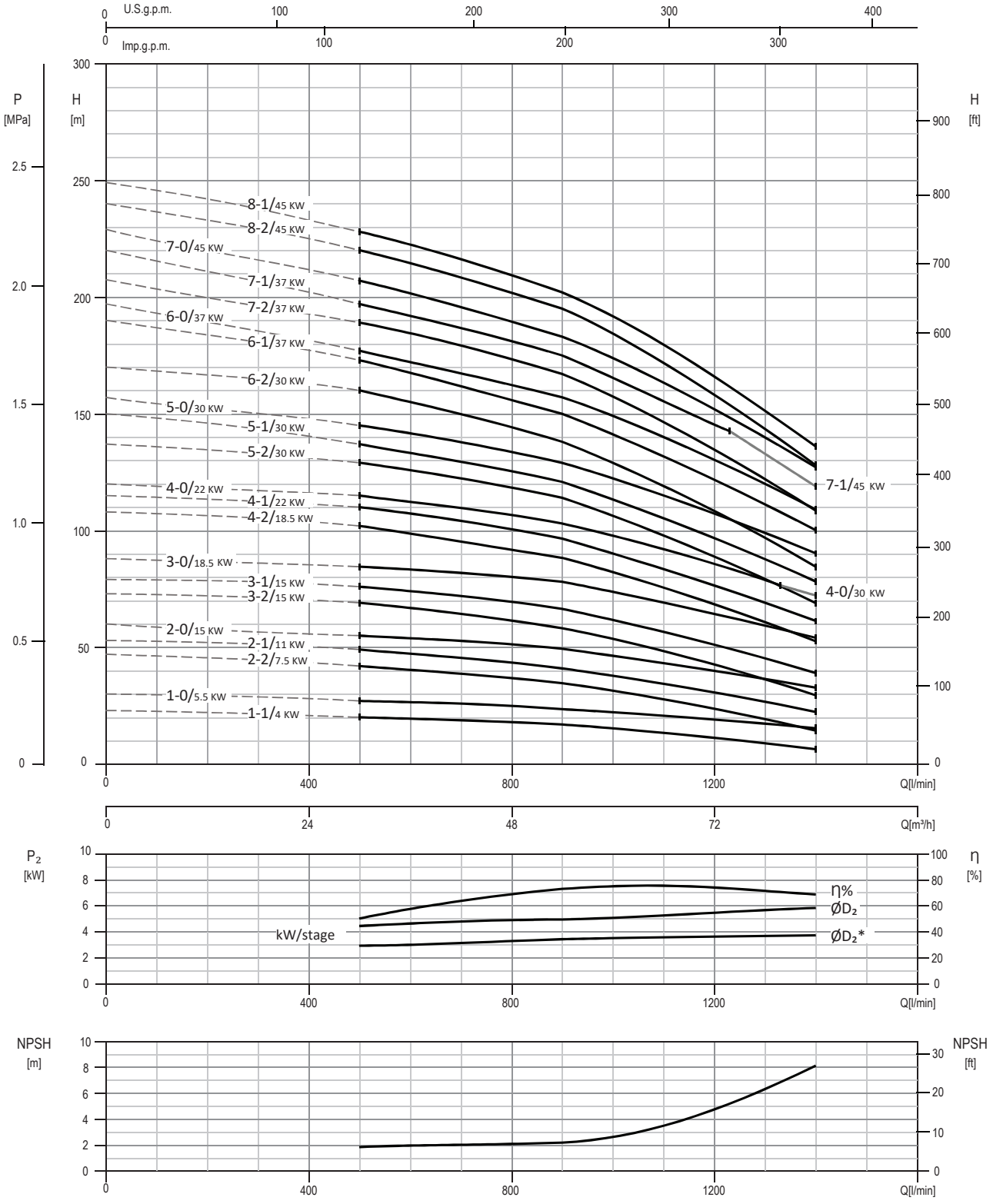

Test standard: ISO 9906:2012 - Grade 3B

EBARA Pumps Europe S.p.A. reserves the right to make changes without prior notice.

TECHNICAL DATA
EVMS(L)64

Dimensional sketch

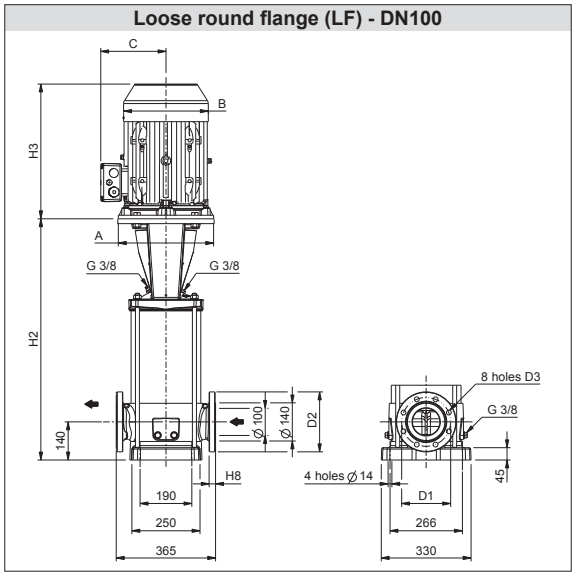

Dimensions [mm] and Weights [Kg]

Pump Type	Pmax [MPa]	Motor					Loose round flange (LF)						Weight Pump	Weight Pump + Motor
		kW	Size	A Ø	B	C	H2	H2+H3	D1	D2	D3	H8		
EVMS(L)64 1-1/4.0	1.6	4.0	112	160	193	138	546	910	180	220	18	24	67.8	96.3
EVMS(L)64 1-0/5.5	1.6	5.5	132	300	220	152	650	1049	180	220	18	24	77.6	116.6
EVMS(L)64 2-2/7.5	1.6	7.5	132	300	220	152	722	1141	180	220	18	24	82.7	128.7
EVMS(L)64 2-1/11	1.6	11	160	350	259	180	752	1191	180	220	18	24	90.0	152.5
EVMS(L)64 2-0/15	1.6	15	160	350	311	240	752	1247	180	220	18	24	90.0	191.0
EVMS(L)64 3-2/15	1.6	15	160	350	311	240	824	1319	180	220	18	24	95.1	196.1
EVMS(L)64 3-1/15	1.6	15	160	350	311	240	824	1319	180	220	18	24	95.1	196.1
EVMS(L)64 3-0/18.5	1.6	18.5	160	350	311	240	824	1319	180	220	18	24	95.1	204.1
EVMS(L)64 4-2/18.5	1.6	18.5	160	350	311	240	896	1391	180	220	18	24	100.2	209.2
EVMS(L)64 4-1/22	1.6	22	180	350	354	260	896	1448	180	220	18	24	100.4	235.4
EVMS(L)64 4-0/22	1.6	22	180	350	354	260	896	1448	180	220	18	24	100.4	235.4
EVMS(L)64 4-0/30	1.6	30	200	400	354	280	896	1448	180	220	18	24	100.4	268.4
EVMS(L)64 5-2/30	1.6	30	200	400	354	280	968	1520	180	220	18	24	110.9	278.9
EVMS(L)64 5-1/30	1.6	30	200	400	354	280	968	1520	180	220	18	24	110.9	278.9
EVMS(L)64 5-0/30	1.6	30	200	400	354	280	968	1520	180	220	18	24	110.9	278.9
EVMS(L)64 6-2/30	2.5	30	200	400	354	280	1040	1592	190	235	22	30	121.2	289.2
EVMS(L)64 6-1/37	2.5	37	200	400	382	295	1057	1734	190	235	22	30	133.2	393.2
EVMS(L)64 6-0/37	2.5	37	200	400	382	295	1057	1734	190	235	22	30	133.2	393.2
EVMS(L)64 7-2/37	2.5	37	200	400	382	295	1129	1806	190	235	22	30	138.6	398.6
EVMS(L)64 7-1/37	2.5	37	200	400	382	295	1129	1806	190	235	22	30	138.6	398.6
EVMS(L)64 7-1/45	2.5	45	225	450	449	335	1129	1895	190	235	22	30	138.6	512.6
EVMS(L)64 7-0/45	2.5	45	225	450	449	335	1129	1895	190	235	22	30	144.2	518.2
EVMS(L)64 8-2/45	2.5	45	225	450	449	335	1201	1967	190	235	22	30	149.9	523.9
EVMS(L)64 8-1/45	2.5	45	225	450	449	335	1201	1967	190	235	22	30	149.4	523.4

1.6 MPa=16 bar; 2.5 MPa=25 bar

EBARA
EBARA Pumps Europe
EBARA Pumps Europe S.p.A. reserves the right to make changes without prior notice.

SECTIONAL VIEW
EVMS(L)64

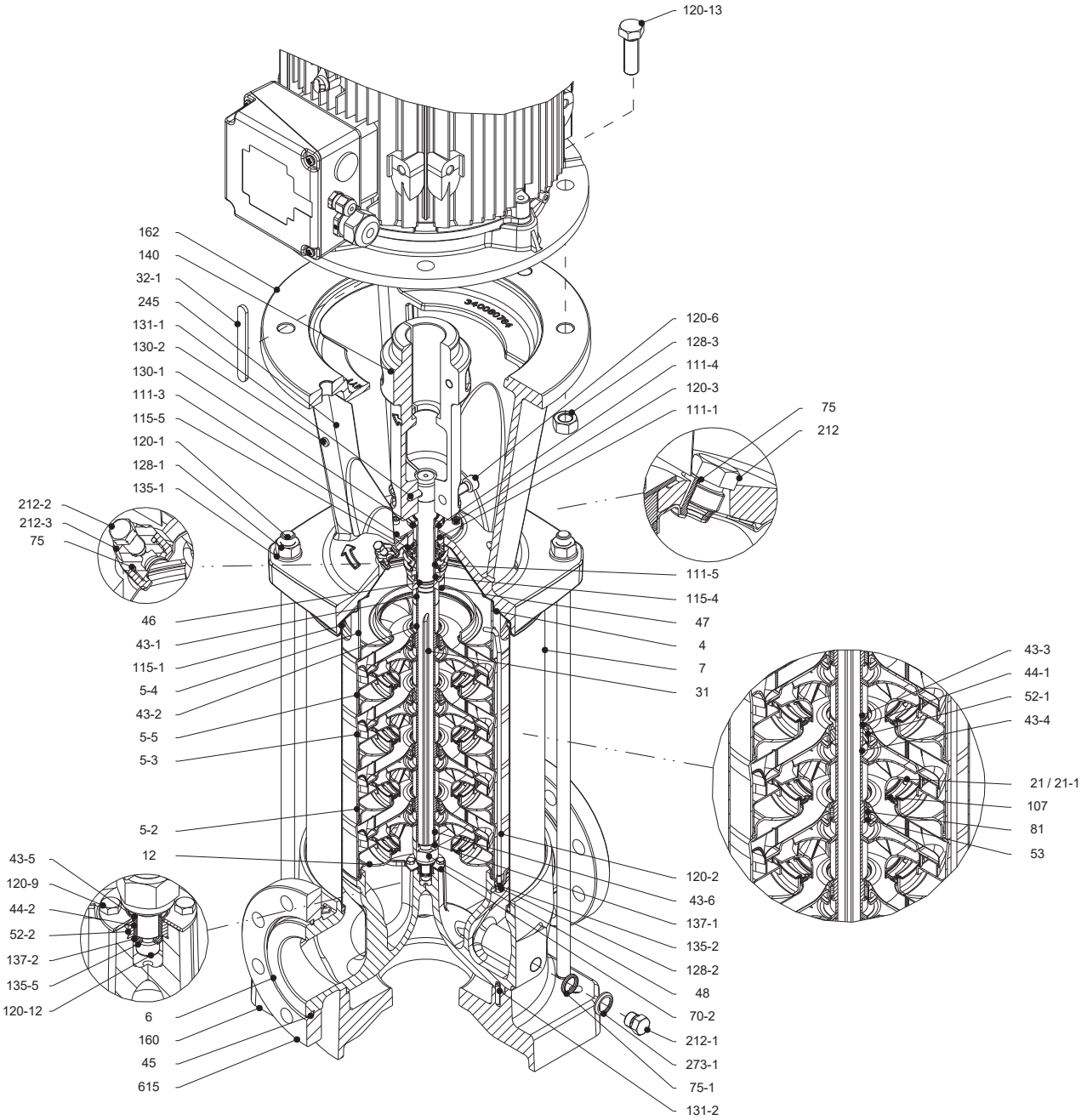

Pump without ball bearing
up to 30 kW

EBARA Pumps Europe S.p.A. reserves the right to make changes without prior notice.

SECTIONAL VIEW
EVMS(L)64

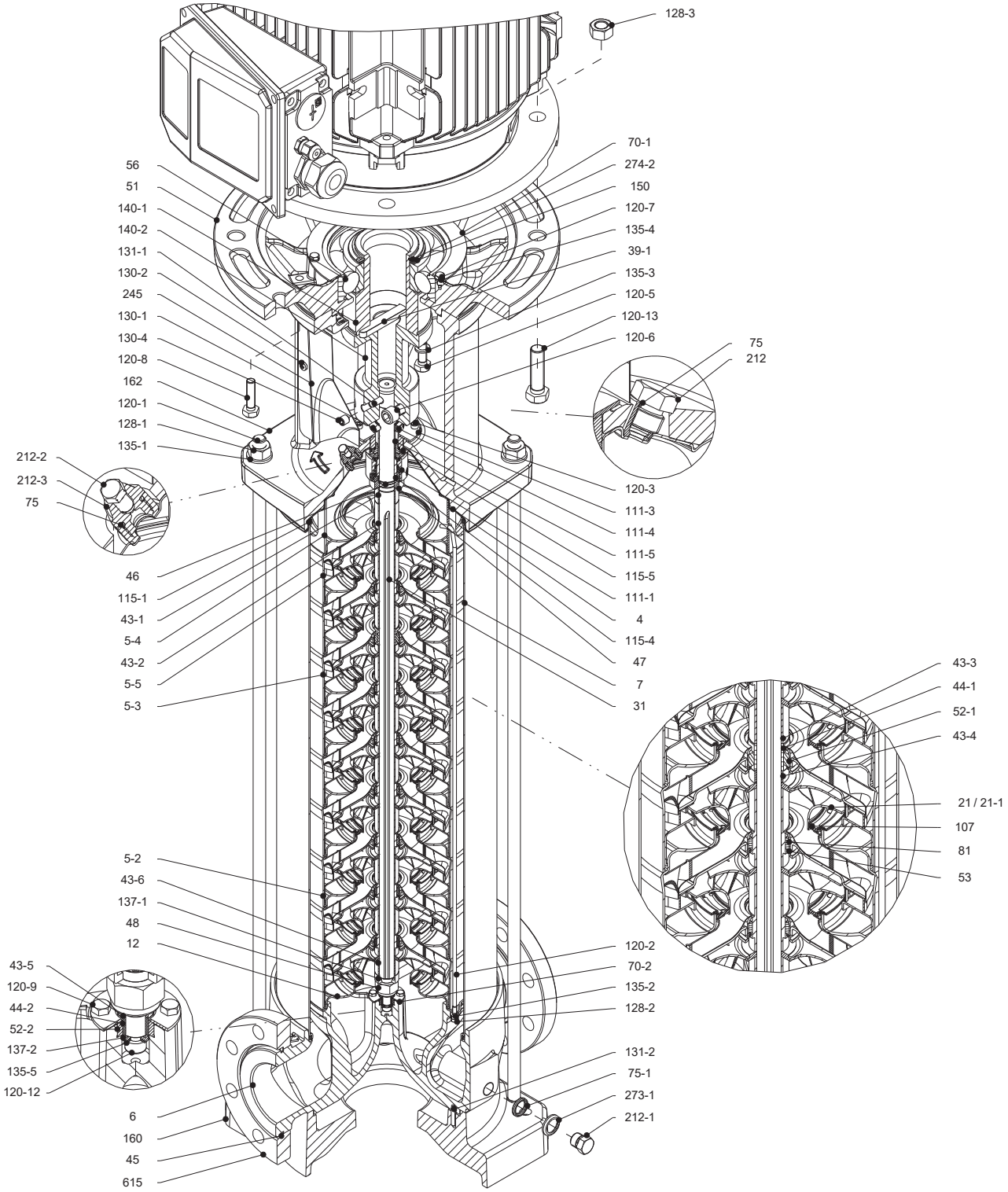

Pump with single ball bearing
above 37 kW

EBARA Pumps Europe S.p.A. reserves the right to make changes without prior notice.

SECTIONAL TABLE
EVMS(L)64

N°	PART NAME		MATERIAL		DIMENSIONS	STANDARD
			EVMS	EVMSL		
4	Casing cover		EN 1.4301 (AISI 304)	EN 1.4404 (AISI 316L)		
5-2	Intermediate casing		EN 1.4301 (AISI 304)	EN 1.4404 (AISI 316L)		
5-3	Intermediate casing with bearing		EN 1.4301 (AISI 304)	EN 1.4404 (AISI 316L)		
5-4	Discharge casing		EN 1.4301 (AISI 304)	EN 1.4404 (AISI 316L)		
5-5	Top intermediate casing		EN 1.4301 (AISI 304)	EN 1.4404 (AISI 316L)		
6	Bottom casing		EN 1.4308 (ASTM CF8)	EN 1.4408 (ASTM CF8M)		
7	Outer casing		EN 1.4301 (AISI 304)	EN 1.4404 (AISI 316L)		
12	Suction cover		EN 1.4301 (AISI 304)	EN 1.4404 (AISI 316L)		
21	Impeller		EN 1.4301 (AISI 304)	EN 1.4404 (AISI 316L)		
21-1	Reduced impeller		EN 1.4301 (AISI 304)	EN 1.4404 (AISI 316L)		
31	Shaft		EN 1.4301 (AISI 304)	EN 1.4404 (AISI 316L) - EN 1.4462 (AISI 329A)		
32-1	Adjuster key		EN 1.4301 (AISI 304)			
39-1	Coupling key	above 37 kW	Carbon Steel			
43-1	Shaft sleeve (mechanical seal)		EN 1.4301 (AISI 304)	EN 1.4404 (AISI 316L)		
43-2	Shaft sleeve (intermediate)		EN 1.4301 (AISI 304)	EN 1.4404 (AISI 316L)		
43-3	Shaft sleeve (bearing)		EN 1.4301 (AISI 304)	EN 1.4404 (AISI 316L)		
43-4	Shaft sleeve (adjustment)		EN 1.4301 (AISI 304)	EN 1.4404 (AISI 316L)		
43-5	Shaft sleeve (last stage)		EN 1.4301 (AISI 304)	EN 1.4404 (AISI 316L)		
43-6	Shaft sleeve (adjustment)		EN 1.4301 (AISI 304)	EN 1.4404 (AISI 316L)		
44-1	Shaft sleeve bearing		Tungsten carbride			
44-2	Shaft sleeve (bearing)		Tungsten carbride			
45	Flange holder		EN 1.4301 (AISI 304)			
46	Ring (mechanical seal)		EN 1.4404 (AISI 316L)			
47	Ring holder		EN 1.4404 (AISI 316L)			
48	Impeller nut		EN 1.4301 (AISI 304) with inox insert	EN 1.4401 (AISI 316) with inox insert		
51	Motor adapter	above 37 kW	Cast Iron EN GJL250 EN 1561			
52-1	Sleeve bearing		Tungsten carbride			
52-2	Bearing sleeve (bottom casing)		Tungsten carbride			
53	Bush holder		EN 1.4301 (AISI 304)	EN 1.4404 (AISI 316L)		
56	Ball bearing	above 37 kW	see table page 127			
70-1	Ring for ball bearing	above 37 kW	EN 1.4301 (AISI 304)			
70-2	Ring for bearing sleeve		EN 1.4301 (AISI 304)	EN 1.4404 (AISI 316L)		
75	O-Ring (priming plug)		EPDM / FPM		Ø12.37x2.62	OR 3050
75-1	O-Ring (drainage plug)		EPDM / FPM			
81	Bush		PTFE			
107	Liner ring		EN 1.4301 (AISI 304) + PPS	EN 1.4404 (AISI 316L) + PPS		
111-1	Mechanical seal		See pages 6-7			
111-3	Mechanical seal seat		EN 1.4301 (AISI 304)	EN 1.4401 (AISI 316)		
111-4	Seal holder		EN 1.4404 (AISI 316L)			
111-5	Mechanical seal cartridge sleeve		EN 1.4301 (AISI 304)	EN 1.4404 (AISI 316L)		
115-1	O-Ring (outer casing)		EPDM / FPM		Ø240.66x5.34	OR 6945
115-4	O-Ring (cartridge sleeve)		EPDM / FPM		Ø23.39x3.53	OR 4093
115-5	O-Ring (seal flange)		EPDM / FPM		Ø44.04x3.53	OR 4175
120-1	Tie rod		EN 1.4057 (AISI 431)			
120-2	Tie rod (stage)		EN 1.4301 (AISI 304)	EN 1.4401 (AISI 316)		
120-3	Screw (seal flange)		A2-70		M5x12	ISO 4762
120-5	Screw (extension coupling)	above 37 kW	Galvanized steel 8.8 strength class ISO 898/1		M10x30	ISO 4017

EBARA Pumps Europe S.p.A. reserves the right to make changes without prior notice.

SECTIONAL TABLE
EVMS(L)64

N°	PART NAME		MATERIAL EVMS	MATERIAL EVMSL	DIMENSIONS	STANDARD
120-6	Screw (pump coupling)	up to 4.0 kW	Galvanized steel 8.8 strength class ISO 898/1		M6x25	ISO 4762
		from 5.5 kW to 7.5 kW	Galvanized steel 8.8 strength class ISO 898/1		M8x25	ISO 4762
		from 11 kW to 30 kW	Galvanized steel 8.8 strength class ISO 898/1		M10x30	ISO 4762
		above 37 kW	Galvanized steel 8.8 strength class ISO 898/1		M12x30	ISO 4762
120-7	Screw (ball bearing)	above 37 kW	Galvanized steel 8.8 strength class ISO 898/1		M6x10	ISO 4017
120-8	Screw (motor adapter)	above 37 kW	Galvanized steel 8.8 strength class ISO 898/1		M10x40	ISO 4017
120-9	Screw (bottom casing)		A2-70		M5x8	ISO 4017
120-12	Screw (shaft)		A2-70		M6x16	ISO 4762
120-13	Screw for motor	MEC 112	Galvanized steel 8.8 strength class ISO 898/1		M8x20	ISO 4017
		MEC 132	Galvanized steel 8.8 strength class ISO 898/1		M12x45	ISO 4017
		MEC 160-180	Galvanized steel 8.8 strength class ISO 898/1		M16x50	ISO 4017
		MEC 200-225	Galvanized steel 8.8 strength class ISO 898/1		M16x60	ISO 4014
128-1	Nut (tie rod)		A2-70		M16	ISO 4032
128-2	Nut (casing tie rod)		A2-70 UNI 7323		M5	ISO 4032
128-3	Nut (motor)	MEC 132	Galvanized steel		M12	ISO 4032
		MEC 160-180-200-225	Galvanized steel		M16	ISO 4032
128-6	Nut (aluminium coupling)	MEC 112	Galvanized steel		M6	ISO 4032
130-1	Set screw		EN 1.4301 (AISI 304)		M6x8	ISO 4026
130-2	Screw for coupling guard		A2-70		M5x6	UNI 7687
130-4	Set screw (pump coupling)	above 37 kW	Galvanized steel		M10x10	ISO 4026
131-1	Pin for shaft	up to 4.0 kW	Carbon Steel		Ø8x42	ISO 2338
		above 5.5 kW	Carbon Steel		Ø8X50	ISO 2338
131-2	Elastic pin		EN 1.4301 (AISI 304)		Ø6x26	ISO 8752
135-1	Washer (tie rod)		EN 1.4301 (AISI 304)		Ø16	ISO 7089
135-2	Washer (casing tie rod)		EN 1.4301 (AISI 304)	EN 1.4404 (AISI 316)	Ø5,1	UNI 1751
135-3	Washer (extension coupling)	above 37 kW	Galvanized steel		Ø10,2	UNI 1751
135-4	Washer (ball bearing)	above 37 kW	Plated carbon steel		Ø6,1	UNI 1751
135-5	Washer (impeller nut)		EN 1.4301 (AISI 304)	EN 1.4404 (AISI 316L)		
135-6	Washer (aluminium coupling)	up to 4.0 kW	Carbon Steel			
137-1	Impeller spacer		EN 1.4301 (AISI 304)	EN 1.4404 (AISI 316L)		
137-2	Shaft spacer		EN 1.4301 (AISI 304)	EN 1.4404 (AISI 316L)		
140	Coupling	up to 4.0 kW	Die cast Aluminium EN AB-AISI11 Cu2 (Fe)			
		from 5.5 kW to 30 kW	Cast Iron EN GJL250 EN 1561			
140-1	Extension coupling	above 37 kW	Carbon Steel			
140-2	Coupling	above 37 kW	Carbon Steel			
150	Spacer (snap ring)	above 37 kW	Carbon Steel			
160	Base		Cast Iron EN GJL200 EN 1561			
162	Motor bracket	up to 30 kW	Cast Iron EN GJS 400-15 EN 1563			
212	Priming plug		EN 1.4301 (AISI 304)	EN 1.4404 (AISI 316L)		
212-1	Drainage plug		EN 1.4301 (AISI 304)	EN 1.4404 (AISI 316L)		
212-2	Venting plug		EN 1.4401 (AISI 316)			
212-3	Priming plug		EN 1.4301 (AISI 304)	EN 1.4404 (AISI 316L)		
245	Coupling guard		EN 1.4301 (AISI 304)			
273-1	Washer (drainage plug)		EN 1.4301 (AISI 304)	EN 1.4404 (AISI 316L)		
274-2	C-type snap ring (coupling)	above 37 kW	Carbon Steel TC80		Ø75	UNI 7435
615	Loose flange		Cast Iron EN GJS 500-7 EN 1563			

EBARA Pumps Europe S.p.A. reserves the right to make changes without prior notice.

QUANTITY FOR MODEL EVMS(L)64

Pump Type	N°																												
	4	5-2	5-3	5-4	5-5	6	7	12	21	21-1	31	32-1	39-1	43-1	43-2	43-3	43-4	43-5	43-6	44-1	44-2	45	46	47	48	51	52-1	52-2
EVMS(L)64 1-1/4.0	1	/	/	1	1	1	1	1	/	1	1	1	/	1	1	/	/	1	1	/	1	4	1	1	1	/	/	1
EVMS(L)64 1-0/5.5	1	/	/	1	1	1	1	1	1	/	1	1	/	1	1	/	/	1	1	/	1	4	1	1	1	/	/	1
EVMS(L)64 2-2/7.5	1	1	/	1	1	1	1	1	/	2	1	1	/	1	2	/	/	1	1	/	1	4	1	1	1	/	/	1
EVMS(L)64 2-1/11	1	1	/	1	1	1	1	1	1	1	1	1	/	1	2	/	/	1	1	/	1	4	1	1	1	/	/	1
EVMS(L)64 2-0/15	1	1	/	1	1	1	1	1	2	/	1	1	/	1	2	/	/	1	1	/	1	4	1	1	1	/	/	1
EVMS(L)64 3-2/15	1	1	1	1	1	1	1	1	1	2	1	1	/	1	2	1	1	1	1	1	1	4	1	1	1	/	1	1
EVMS(L)64 3-1/15	1	1	1	1	1	1	1	1	2	1	1	1	/	1	2	1	1	1	1	1	1	4	1	1	1	/	1	1
EVMS(L)64 3-0/18.5	1	1	1	1	1	1	1	1	3	/	1	1	/	1	2	1	1	1	1	1	1	4	1	1	1	/	1	1
EVMS(L)64 4-2/18.5	1	2	1	1	1	1	1	1	2	2	1	1	/	1	3	1	1	1	1	1	1	4	1	1	1	/	1	1
EVMS(L)64 4-1/22	1	2	1	1	1	1	1	1	3	1	1	1	/	1	3	1	1	1	1	1	1	4	1	1	1	/	1	1
EVMS(L)64 4-0/22	1	2	1	1	1	1	1	1	4	/	1	1	/	1	3	1	1	1	1	1	1	4	1	1	1	/	1	1
EVMS(L)64 4-0/30	1	2	1	1	1	1	1	1	4	/	1	1	/	1	3	1	1	1	1	1	1	4	1	1	1	/	1	1
EVMS(L)64 5-2/30	1	3	1	1	1	1	1	1	3	2	1	1	/	1	4	1	1	1	1	1	1	4	1	1	1	/	1	1
EVMS(L)64 5-1/30	1	3	1	1	1	1	1	1	4	1	1	1	/	1	4	1	1	1	1	1	1	4	1	1	1	/	1	1
EVMS(L)64 5-0/30	1	3	1	1	1	1	1	1	5	/	1	1	/	1	4	1	1	1	1	1	1	4	1	1	1	/	1	1
EVMS(L)64 6-2/30	1	4	1	1	1	1	1	1	4	2	1	1	/	1	5	1	1	1	1	1	1	4	1	1	1	/	1	1
EVMS(L)64 6-1/37	1	4	1	1	1	1	1	1	5	1	1	/	1	1	5	1	1	1	1	1	1	4	1	1	1	1	1	1
EVMS(L)64 6-0/37	1	4	1	1	1	1	1	1	6	/	1	/	1	1	5	1	1	1	1	1	1	4	1	1	1	1	1	1
EVMS(L)64 7-2/37	1	5	1	1	1	1	1	1	5	2	1	/	1	1	6	1	1	1	1	1	1	4	1	1	1	1	1	1
EVMS(L)64 7-1/37	1	5	1	1	1	1	1	1	6	1	1	/	1	1	6	1	1	1	1	1	1	4	1	1	1	1	1	1
EVMS(L)64 7-1/45	1	5	1	1	1	1	1	1	6	1	1	/	1	1	6	1	1	1	1	1	1	4	1	1	1	1	1	1
EVMS(L)64 7-0/45	1	5	1	1	1	1	1	1	7	/	1	/	1	1	6	1	1	1	1	1	1	4	1	1	1	1	1	1
EVMS(L)64 8-2/45	1	6	1	1	1	1	1	1	6	2	1	/	1	1	7	1	1	1	1	1	1	4	1	1	1	1	1	1
EVMS(L)64 8-1/45	1	6	1	1	1	1	1	1	7	1	1	/	1	1	7	1	1	1	1	1	1	4	1	1	1	1	1	1

shaft in EN 1.4462 (AISI 329A)

Pump Type	N°																												
	53	56	70-1	70-2	75	75-1	81	107	111-1	111-3	111-4	111-5	115-1	115-4	115-5	120-1	120-2	120-3	120-6	120-5	120-7	120-8	120-9	120-12	120-13	128-1	128-2	128-3
EVMS(L)64 1-1/4.0	1	/	/	1	2	4	1	1	1	1	1	1	2	1	1	4	2	4	4	/	/	/	4	1	4	4	4	/
EVMS(L)64 1-0/5.5	1	/	/	1	2	4	1	1	1	1	1	1	2	1	1	4	2	4	4	/	/	/	4	1	4	4	4	4
EVMS(L)64 2-2/7.5	2	/	/	1	2	4	2	2	1	1	1	1	2	1	1	4	2	4	4	/	/	/	4	1	4	4	4	4
EVMS(L)64 2-1/11	2	/	/	1	2	4	2	2	1	1	1	1	2	1	1	4	2	4	4	/	/	/	4	1	4	4	4	4
EVMS(L)64 2-0/15	2	/	/	1	2	4	2	2	1	1	1	1	2	1	1	4	2	4	4	/	/	/	4	1	4	4	4	4
EVMS(L)64 3-2/15	2	/	/	1	2	4	2	3	1	1	1	1	2	1	1	4	2	4	4	/	/	/	4	1	4	4	4	4
EVMS(L)64 3-1/15	2	/	/	1	2	4	2	3	1	1	1	1	2	1	1	4	2	4	4	/	/	/	4	1	4	4	4	4
EVMS(L)64 3-0/18.5	2	/	/	1	2	4	2	3	1	1	1	1	2	1	1	4	2	4	4	/	/	/	4	1	4	4	4	4
EVMS(L)64 4-2/18.5	4	/	/	1	2	4	3	4	1	1	1	1	2	1	1	4	2	4	4	/	/	/	4	1	4	4	4	4
EVMS(L)64 4-1/22	4	/	/	1	2	4	3	4	1	1	1	1	2	1	1	4	2	4	4	/	/	/	4	1	4	4	4	4
EVMS(L)64 4-0/22	4	/	/	1	2	4	3	4	1	1	1	1	2	1	1	4	2	4	4	/	/	/	4	1	4	4	4	4
EVMS(L)64 4-0/30	4	/	/	1	2	4	3	4	1	1	1	1	2	1	1	4	2	4	4	/	/	/	4	1	4	4	4	4
EVMS(L)64 5-2/30	5	/	/	1	2	4	4	5	1	1	1	1	2	1	1	4	2	4	4	/	/	/	4	1	4	4	4	4
EVMS(L)64 5-1/30	5	/	/	1	2	4	4	5	1	1	1	1	2	1	1	4	2	4	4	/	/	/	4	1	4	4	4	4
EVMS(L)64 5-0/30	5	/	/	1	2	4	4	5	1	1	1	1	2	1	1	4	2	4	4	/	/	/	4	1	4	4	4	4
EVMS(L)64 6-2/30	6	/	/	1	2	4	5	6	1	1	1	1	2	1	1	4	2	4	4	/	/	/	4	1	4	4	4	4
EVMS(L)64 6-1/37	6	1	1	1	2	4	5	6	1	1	1	1	2	1	1	4	2	4	2	4	3	4	4	1	4	4	4	4
EVMS(L)64 6-0/37	6	1	1	1	2	4	5	6	1	1	1	1	2	1	1	4	2	4	2	4	3	4	4	1	4	4	4	4
EVMS(L)64 7-2/37	7	1	1	1	2	4	6	7	1	1	1	1	2	1	1	4	2	4	2	4	3	4	4	1	4	4	4	4
EVMS(L)64 7-1/37	7	1	1	1	2	4	6	7	1	1	1	1	2	1	1	4	2	4	2	4	3	4	4	1	4	4	4	4
EVMS(L)64 7-1/45	7	1	1	1	2	4	6	7	1	1	1	1	2	1	1	4	2	4	2	4	3	4	4	1	4	4	4	4
EVMS(L)64 7-0/45	7	1	1	1	2	4	6	7	1	1	1	1	2	1	1	4	2	4	2	4	3	4	4	1	8	4	4	8
EVMS(L)64 8-2/45	8	1	1	1	2	4	7	8	1	1	1	1	2	1	1	4	2	4	2	4	3	4	4	1	8	4	4	8
EVMS(L)64 8-1/45	8	1	1	1	2	4	7	8	1	1	1	1	2	1	1	4	2	4	2	4	3	4	4	1	8	4	4	8

EBARA Pumps Europe S.p.A. reserves the right to make changes without prior notice.

QUANTITY FOR MODEL EVMS(L)64

Pump Type	N°																											
	128-6	130-1	130-2	130-4	131-1	131-2	135-1	137-1	135-2	135-3	135-4	135-5	135-6	137-2	140	140-1	140-2	150	160	162	212	212-1	212-2	212-3	245	273-1	274-2	615
EVMS(L)64 1-1/4.0	4	3	4	/	1	1	4	1	2	/	/	1	4	1	2	/	/	/	1	1	1	4	1	1	2	4	/	2
EVMS(L)64 1-0/5.5	/	3	4	/	1	1	4	1	2	/	/	1	/	1	2	/	/	/	1	1	1	4	1	1	2	4	/	2
EVMS(L)64 2-2/7.5	/	3	4	/	1	1	4	1	2	/	/	1	/	1	2	/	/	/	1	1	1	4	1	1	2	4	/	2
EVMS(L)64 2-1/11	/	3	4	/	1	1	4	1	2	/	/	1	/	1	2	/	/	/	1	1	1	4	1	1	2	4	/	2
EVMS(L)64 2-0/15	/	3	4	/	1	1	4	1	2	/	/	1	/	1	2	/	/	/	1	1	1	4	1	1	2	4	/	2
EVMS(L)64 3-2/15	/	3	4	/	1	1	4	1	2	/	/	1	/	1	2	/	/	/	1	1	1	4	1	1	2	4	/	2
EVMS(L)64 3-1/15	/	3	4	/	1	1	4	1	2	/	/	1	/	1	2	/	/	/	1	1	1	4	1	1	2	4	/	2
EVMS(L)64 3-0/18.5	/	3	4	/	1	1	4	1	2	/	/	1	/	1	2	/	/	/	1	1	1	4	1	1	2	4	/	2
EVMS(L)64 4-2/18.5	/	3	4	/	1	1	4	1	2	/	/	1	/	1	2	/	/	/	1	1	1	4	1	1	2	4	/	2
EVMS(L)64 4-1/22	/	3	4	/	1	1	4	1	2	/	/	1	/	1	2	/	/	/	1	1	1	4	1	1	2	4	/	2
EVMS(L)64 4-0/22	/	3	4	/	1	1	4	1	2	/	/	1	/	1	2	/	/	/	1	1	1	4	1	1	2	4	/	2
EVMS(L)64 4-0/30	/	3	4	/	1	1	4	1	2	/	/	1	/	1	2	/	/	/	1	1	1	4	1	1	2	4	/	2
EVMS(L)64 5-2/30	/	3	4	/	1	1	4	1	2	/	/	1	/	1	2	/	/	/	1	1	1	4	1	1	2	4	/	2
EVMS(L)64 5-1/30	/	3	4	/	1	1	4	1	2	/	/	1	/	1	2	/	/	/	1	1	1	4	1	1	2	4	/	2
EVMS(L)64 5-0/30	/	3	4	/	1	1	4	1	2	/	/	1	/	1	2	/	/	/	1	1	1	4	1	1	2	4	/	2
EVMS(L)64 6-2/30	/	3	4	/	1	1	4	1	2	/	/	1	/	1	2	/	/	/	1	1	1	4	1	1	2	4	/	2
EVMS(L)64 6-1/37	/	3	4	1	1	1	4	1	2	4	3	1	/	1	/	1	1	1	1	1	1	4	1	1	2	4	1	2
EVMS(L)64 6-0/37	/	3	4	1	1	1	4	1	2	4	3	1	/	1	/	1	1	1	1	1	1	4	1	1	2	4	1	2
EVMS(L)64 7-2/37	/	3	4	1	1	1	4	1	2	4	3	1	/	1	/	1	1	1	1	1	1	4	1	1	2	4	1	2
EVMS(L)64 7-1/37	/	3	4	1	1	1	4	1	2	4	3	1	/	1	/	1	1	1	1	1	1	4	1	1	2	4	1	2
EVMS(L)64 7-1/45	/	3	4	1	1	1	4	1	2	4	3	1	/	1	/	1	1	1	1	1	1	4	1	1	2	4	1	2
EVMS(L)64 7-0/45	/	3	4	1	1	1	4	1	2	4	3	1	/	1	/	1	1	1	1	1	1	4	1	1	2	4	1	2
EVMS(L)64 8-2/45	/	3	4	1	1	1	4	1	2	4	3	1	/	1	/	1	1	1	1	1	1	4	1	1	2	4	1	2
EVMS(L)64 8-1/45	/	3	4	1	1	1	4	1	2	4	3	1	/	1	/	1	1	1	1	1	1	4	1	1	2	4	1	2

BEARINGS EVMS(L)64

Pump Type	N° 56
EVMS(L)64 1-1/4.0	/
EVMS(L)64 1-0/5.5	/
EVMS(L)64 2-2/7.5	/
EVMS(L)64 2-1/11	/
EVMS(L)64 2-0/15	/
EVMS(L)64 3-2/15	/
EVMS(L)64 3-1/15	/
EVMS(L)64 3-0/18.5	/
EVMS(L)64 4-2/18.5	/
EVMS(L)64 4-1/22	/
EVMS(L)64 4-0/22	/
EVMS(L)64 4-0/30	/
EVMS(L)64 5-2/30	/
EVMS(L)64 5-1/30	/
EVMS(L)64 5-0/30	/
EVMS(L)64 6-2/30	/
EVMS(L)64 6-1/37	6315 ZZ C3
EVMS(L)64 6-0/37	6315 ZZ C3
EVMS(L)64 7-2/37	6315 ZZ C3
EVMS(L)64 7-1/37	6315 ZZ C3
EVMS(L)64 7-1/45	6315 ZZ C3
EVMS(L)64 7-0/45	6315 ZZ C3
EVMS(L)64 8-2/45	6315 ZZ C3
EVMS(L)64 8-1/45	6315 ZZ C3

EBARA Pumps Europe S.p.A. reserves the right to make changes without prior notice.

PERFORMANCE CURVE
EVMSG64

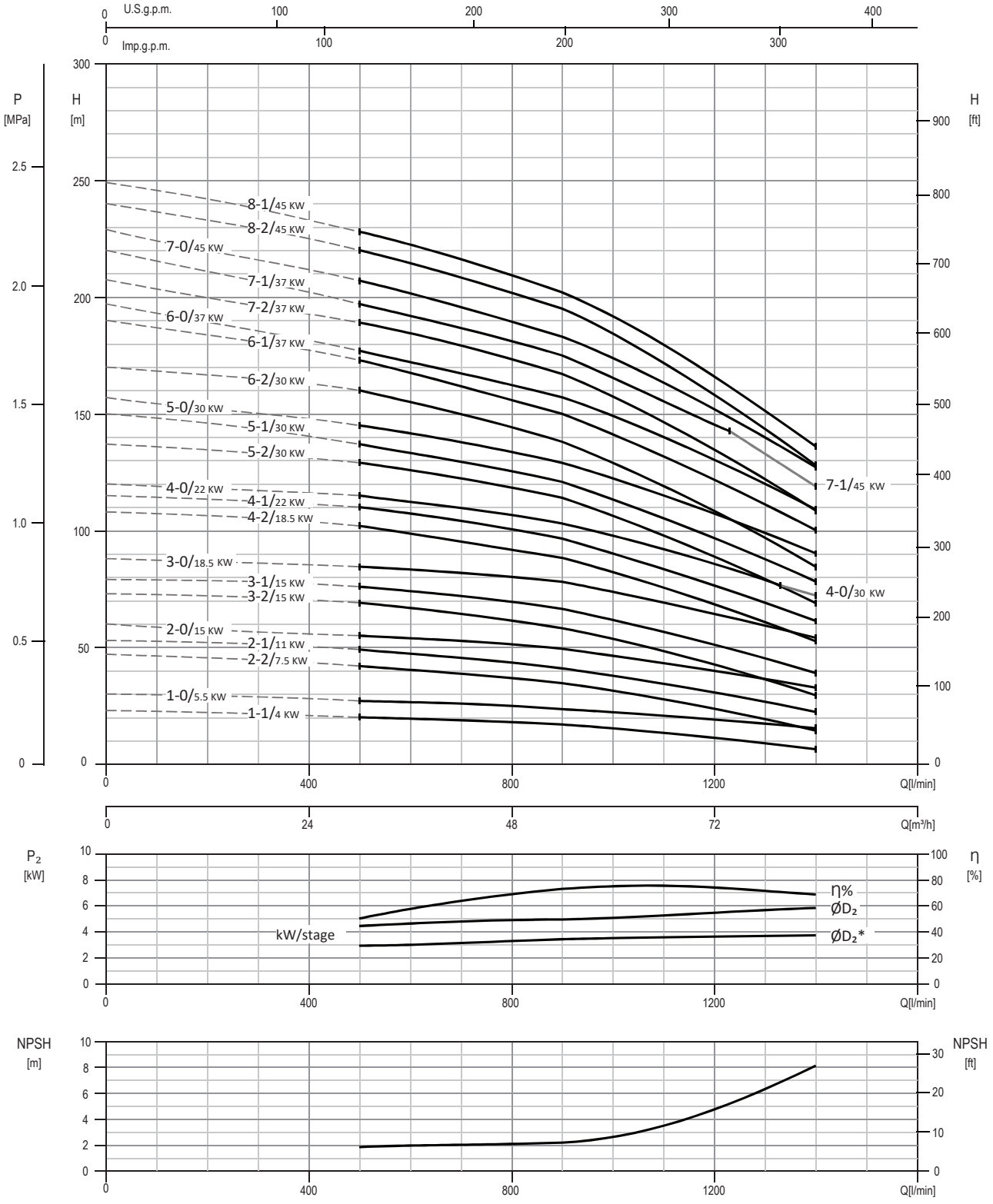

Test standard: ISO 9906:2012 - Grade 3B

EBARA Pumps Europe

EBARA Pumps Europe S.p.A. reserves the right to make changes without prior notice.

TECHNICAL DATA
EVMSG64

Dimensional sketch

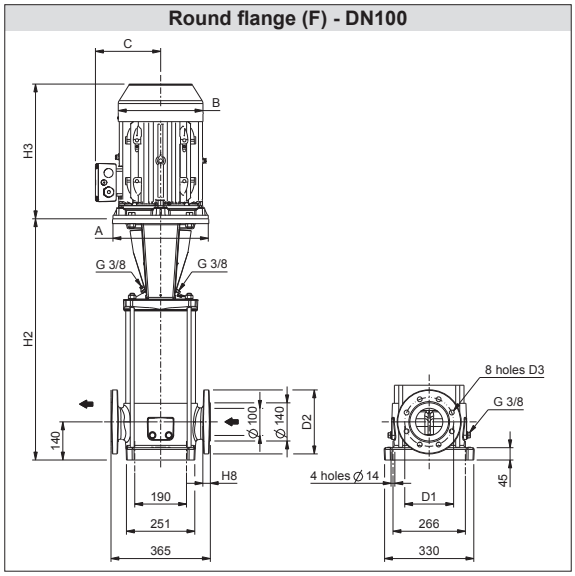

Dimensions [mm] and Weights [Kg]

Pump Type	Pmax [MPa]	Motor					Round flange (F)						Weight Pump	Weight Pump + Motor
		kW	Size	A Ø	B	C	H2	H2+H3	D1	D2	D3	H8		
EVMSG64 1-1/4.0	1.6	4.0	112	160	193	138	546	910	180	235	18	24	64.8	93.3
EVMSG64 1-0/5.5	1.6	5.5	132	300	220	152	650	1049	180	235	18	24	74.6	113.6
EVMSG64 2-2/7.5	1.6	7.5	132	300	220	152	722	1141	180	235	18	24	79.7	125.7
EVMSG64 2-1/11	1.6	11	160	350	259	180	752	1191	180	235	18	24	87.0	149.5
EVMSG64 2-0/15	1.6	15	160	350	311	240	752	1247	180	235	18	24	87.0	188.0
EVMSG64 3-2/15	1.6	15	160	350	311	240	824	1319	180	235	18	24	92.1	193.1
EVMSG64 3-1/15	1.6	15	160	350	311	240	824	1319	180	235	18	24	92.1	193.1
EVMSG64 3-0/18.5	1.6	18.5	160	350	311	240	824	1319	180	235	18	24	92.1	201.1
EVMSG64 4-2/18.5	1.6	18.5	160	350	311	240	896	1391	180	235	18	24	97.2	206.2
EVMSG64 4-1/22	1.6	22	180	350	354	260	896	1448	180	235	18	24	97.4	232.4
EVMSG64 4-0/22	1.6	22	180	350	354	260	896	1448	180	235	18	24	97.4	232.4
EVMSG64 4-0/30	1,6	30	200	400	354	280	896	1448	180	220	18	24	97,4	265,4
EVMSG64 5-2/30	1.6	30	200	400	354	280	968	1520	180	235	18	24	107.9	275.9
EVMSG64 5-1/30	1.6	30	200	400	354	280	968	1520	180	235	18	24	107.9	275.9
EVMSG64 5-0/30	1.6	30	200	400	354	280	968	1520	180	235	18	24	107.9	275.9
EVMSG64 6-2/30	2.5	30	200	400	354	280	1040	1592	190	254	22	31	119.5	287.5
EVMSG64 6-1/37	2.5	37	200	400	382	295	1057	1734	190	254	22	31	131.6	391.6
EVMSG64 6-0/37	2.5	37	200	400	382	295	1057	1734	190	254	22	31	131.6	391.6
EVMSG64 7-2/37	2.5	37	200	400	382	295	1129	1806	190	254	22	31	136.9	396.9
EVMSG64 7-1/37	2.5	37	200	400	382	295	1129	1806	190	254	22	31	136.9	396.9
EVMSG64 7-1/45	2,5	45	225	450	449	335	1129	1895	190	235	22	30	136,9	510,9
EVMSG64 7-0/45	2.5	45	225	450	449	335	1129	1895	190	254	22	31	142.5	516.5
EVMSG64 8-2/45	2.5	45	225	450	449	335	1201	1967	190	254	22	31	148.3	522.3
EVMSG64 8-1/45	2.5	45	225	450	449	335	1201	1967	190	254	22	31	147.8	521.8

1.6 MPa=16 bar; 2.5 MPa=25 bar

EBARA Pumps Europe S.p.A. reserves the right to make changes without prior notice.

SECTIONAL VIEW
EVMSG64

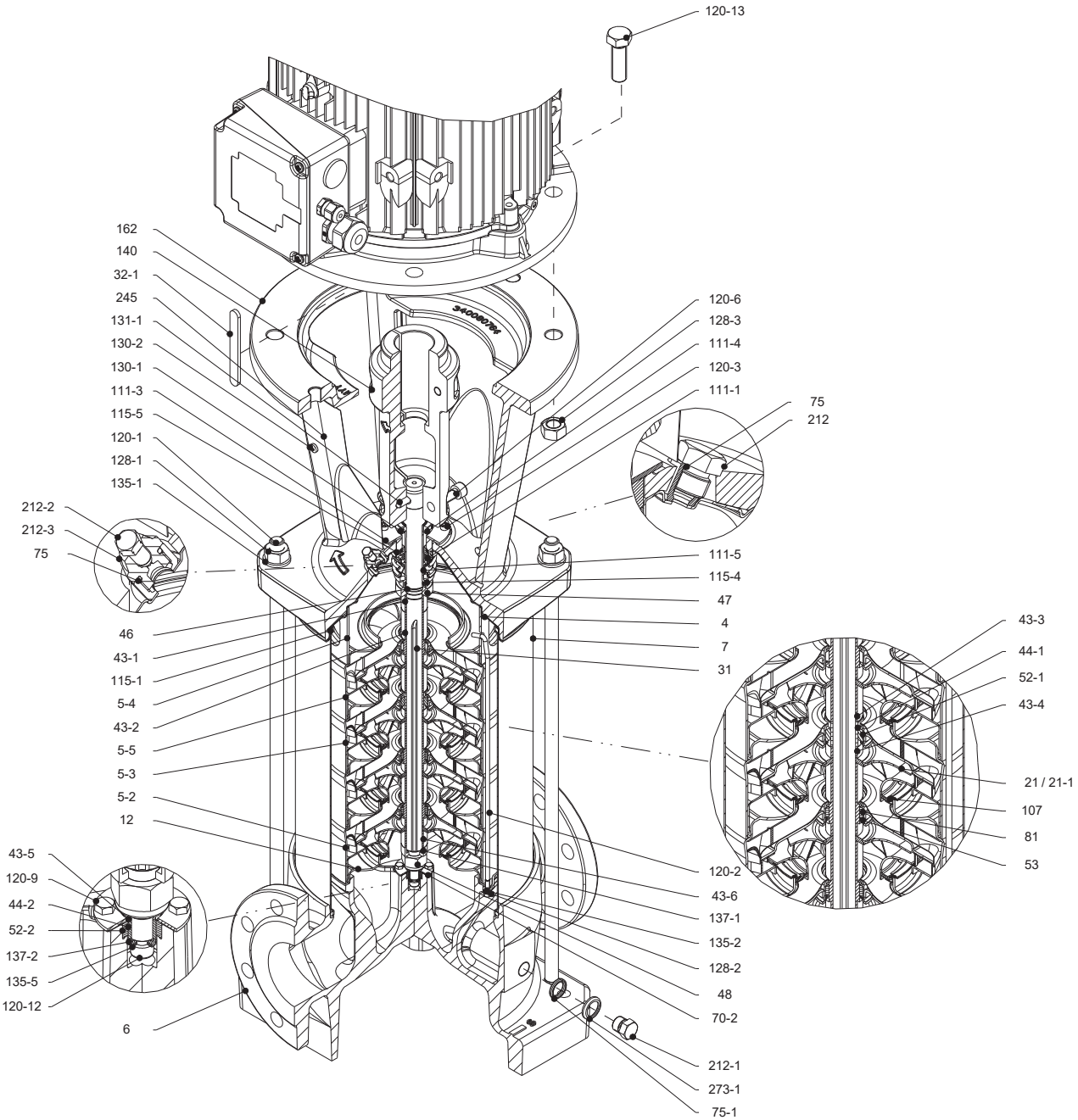

Pump without ball bearing
up to 30 kW

EBARA Pumps Europe S.p.A. reserves the right to make changes without prior notice.

SECTIONAL VIEW
EVMSG64

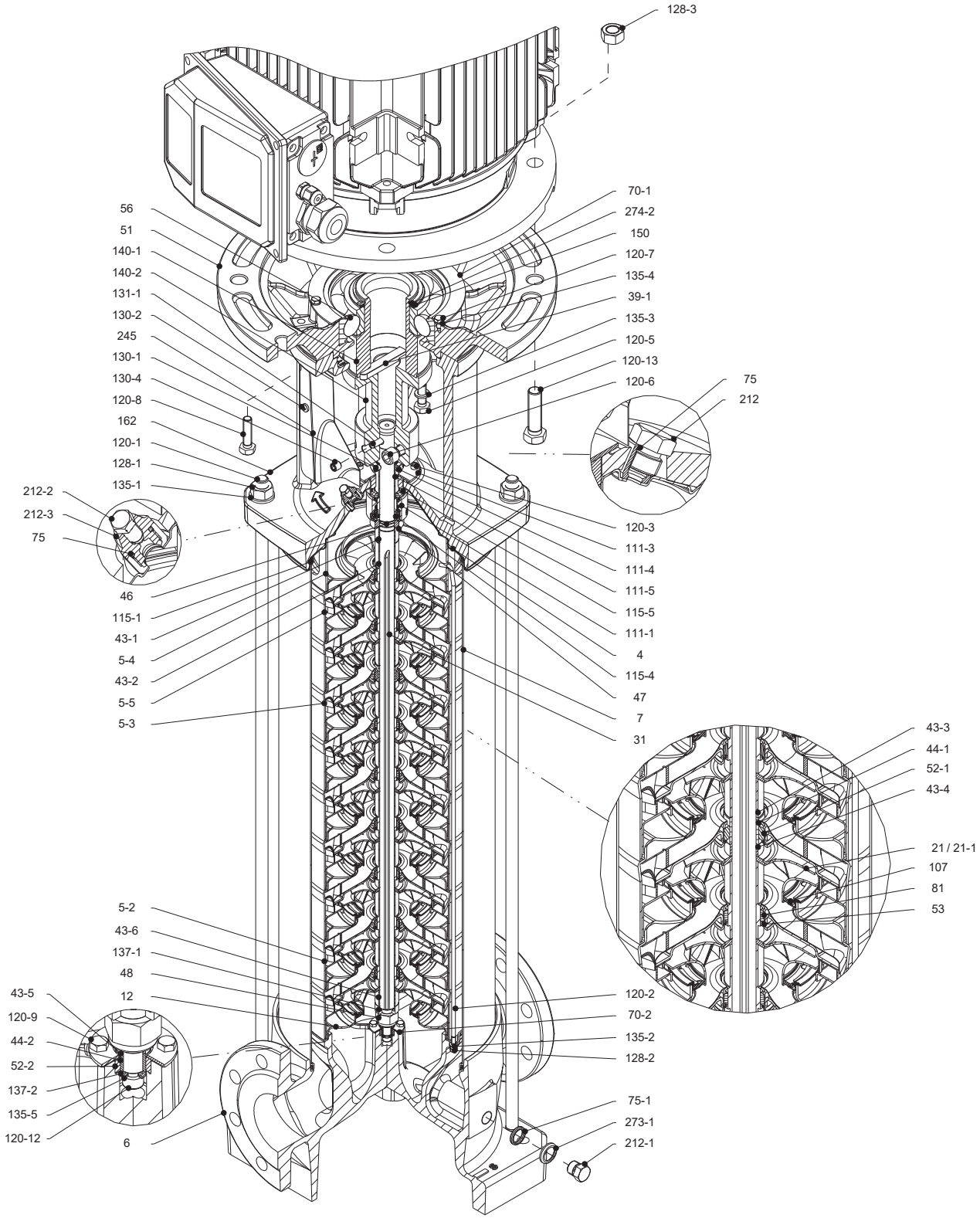

Pump with single ball bearing
above 37 kW

EBARA Pumps Europe S.p.A. reserves the right to make changes without prior notice.

SECTIONAL TABLE
EVMSG64

N°	PART NAME		MATERIAL EVMSG	DIMENSIONS	STANDARD
4	Casing cover		EN 1.4301 (AISI 304)		
5-2	Intermediate casing		EN 1.4301 (AISI 304)		
5-3	Intermediate casing with bearing		EN 1.4301 (AISI 304)		
5-4	Discharge casing		EN 1.4301 (AISI 304)		
5-5	Top intermediate casing		EN 1.4301 (AISI 304)		
6	Bottom casing		Cast Iron EN GJL-250 EN 1561 Cast Iron EN GJS 400-15 EN 1563		
7	Outer casing		EN 1.4301 (AISI 304)		
12	Suction cover		EN 1.4301 (AISI 304)		
21	Impeller		EN 1.4301 (AISI 304)		
21-1	Reduced impeller		EN 1.4301 (AISI 304)		
31	Shaft		EN 1.4301 (AISI 304)		
32-1	Adjuster key		EN 1.4301 (AISI 304)		
39-1	Coupling key	above 37 kW	Carbon Steel		
43-1	Shaft sleeve (mechanical seal)		EN 1.4301 (AISI 304)		
43-2	Shaft sleeve (intermediate)		EN 1.4301 (AISI 304)		
43-3	Shaft sleeve (bearing)		EN 1.4301 (AISI 304)		
43-4	Shaft sleeve (adjustment)		EN 1.4301 (AISI 304)		
43-5	Shaft sleeve (last stage)		EN 1.4301 (AISI 304)		
43-6	Shaft sleeve (adjustment)		EN 1.4301 (AISI 304)		
44-1	Shaft sleeve bearing		Tungsten carbride		
44-2	Shaft sleeve (bearing)		Tungsten carbride		
46	Ring (mechanical seal)		EN 1.4404 (AISI 316L)		
47	Ring holder		EN 1.4301 (AISI 304)		
48	Impeller nut		EN 1.4301 (AISI 304) with inox insert		
51	Motor adapter	above 37 kW	Cast Iron EN GJL250 EN 1561		
52-1	Sleeve bearing		Tungsten carbride		
52-2	Bearing sleeve (bottom casing)		Tungsten carbride		
53	Bush holder		EN 1.4301 (AISI 304)		
56	Ball bearing	above 37 kW	see table page 135		
70-1	Ring for ball bearing	above 37 kW	EN 1.4301 (AISI 304)		
70-2	Ring for bearing sleeve		EN 1.4301 (AISI 304)		
75	O-Ring (priming plug)		EPDM / FPM	Ø12.37x2.62	OR 3050
75-1	O-Ring (drainage plug)		EPDM / FPM		
81	Bush		PTFE		
107	Liner ring		EN 1.4301 (AISI 304) + PPS		
111-1	Mechanical seal		see pages 6-7		
111-3	Mechanical seal seat		EN 1.4301 (AISI 304)		
111-4	Seal holder		EN 1.4404 (AISI 316L)		
111-5	Mechanical seal cartridge sleeve		EN 1.4301 (AISI 304)		
115-1	O-Ring (outer casing)		EPDM / FPM	Ø240.66x5.34	OR 6945
115-4	O-Ring (cartridge sleeve)		EPDM / FPM	Ø23.39x3.53	OR 4093
115-5	O-Ring (seal flange)		EPDM / FPM	Ø44.04x3.53	OR 4175
120-1	Tie rod		EN 1.4057 (AISI 431)		
120-2	Tie rod (stage)		EN 1.4301 (AISI 304)		
120-3	Screw (seal flange)		A2-70	M5x12	ISO 4762
120-5	Screw (extension coupling)	above 37 kW	Galvanized steel 8.8 strength class ISO 898/1	M10x30	ISO 4017

EBARA Pumps Europe S.p.A. reserves the right to make changes without prior notice.

SECTIONAL TABLE
EVMSG64

N°	PART NAME		MATERIAL EVMSG	DIMENSIONS	STANDARD
120-6	Screw (pump coupling)	up to 4.0 kW	Galvanized steel 8.8 strength class ISO 898/1	M6x25	ISO 4762
		from 5.5 kW to 7.5 kW	Galvanized steel 8.8 strength class ISO 898/1	M8x25	ISO 4762
		from 11 kW to 30 kW	Galvanized steel 8.8 strength class ISO 898/1	M10x30	ISO 4762
		above 37 kW	Galvanized steel 8.8 strength class ISO 898/1	M12x30	ISO 4762
120-7	Screw (ball bearing)	above 37 kW	Galvanized steel 8.8 strength class ISO 898/1	M6x10	ISO 4017
120-8	Screw (motor adapter)	above 37 kW	Galvanized steel 8.8 strength class ISO 898/1	M10x40	ISO 4017
120-9	Screw (bottom casing)		A2-70	M5x8	ISO 4017
120-12	Screw (shaft)		A2-70	M6x16	ISO 4762
120-13	Screw for motor	MEC 112	Galvanized steel 8.8 strength class ISO 898/1	M8x20	ISO 4017
		MEC 132	Galvanized steel 8.8 strength class ISO 898/1	M12x45	ISO 4017
		MEC 160-180	Galvanized steel 8.8 strength class ISO 898/1	M16x50	ISO 4017
		MEC 200-225	Galvanized steel 8.8 strength class ISO 898/1	M16x60	ISO 4014
128-1	Nut (tie rod)		A2-70	M16	ISO 4032
128-2	Nut (casing tie rod)		A2-70	M5	ISO 4032
128-3	Nut (motor)	MEC 132	Galvanized steel	M12	ISO 4032
		MEC 160-180-200-225	Galvanized steel	M16	ISO 4032
128-6	Nut (aluminium coupling)	MEC 112	Galvanized steel	M6	ISO 4032
130-1	Set screw		EN 1.4301 (AISI 304)	M6x8	ISO 4026
130-2	Screw for coupling guard		A2-70	M5x6	UNI 7687
130-4	Set screw (pump coupling)	above 37 kW	Galvanized steel	M10x10	ISO 4026
131-1	Pin for shaft	up to 4.0 kW	Carbon Steel	Ø8x42	ISO 2338
		above 5.5 kW	Carbon Steel	Ø8X50	ISO 2338
135-1	Washer (tie rod)		EN 1.4301 (AISI 304)	Ø16	ISO 7089
135-2	Washer (casing tie rod)		EN 1.4301 (AISI 304)	Ø5,1	UNI 1751
135-3	Washer (extension coupling)	above 37 kW	Galvanized steel	Ø10,2	UNI 1751
135-4	Washer (ball bearing)	above 37 kW	Plated carbon steel	Ø6,1	UNI 1751
135-5	Washer (impeller nut)		EN 1.4301 (AISI 304)		
135-6	Washer (aluminium coupling)	up to 4.0 kW	Carbon Steel		
137-1	Impeller spacer		EN 1.4301 (AISI 304)		
137-2	Shaft spacer		EN 1.4301 (AISI 304)		
140	Coupling	up to 4.0 kW	Die cast Aluminium EN AB-AISI11 Cu2 (Fe)		
		from 5.5 kW to 30 kW	Cast Iron EN GJL250 EN 1561		
140-1	Extension coupling	above 37 kW	Carbon Steel		
140-2	Coupling	above 37 kW	Carbon Steel		
150	Spacer (snap ring)	above 37 kW	Carbon Steel		
162	Motor bracket	up to 30 kW	Cast Iron EN GJS 400-15 EN 1563		
212	Priming plug		EN 1.4301 (AISI 304)		
212-1	Drainage plug		EN 1.4301 (AISI 304)		
212-2	Venting plug		EN 1.4401 (AISI 316)		
212-3	Priming plug		EN 1.4301 (AISI 304)		
245	Coupling guard		EN 1.4301 (AISI 304)		
273-1	Washer (drainage plug)		EN 1.4301 (AISI 304)		
274-2	C-type snap ring (coupling)	above 37 kW	Carbon Steel TC80	Ø75	UNI 7435

EBARA Pumps Europe S.p.A. reserves the right to make changes without prior notice.

QUANTITY FOR MODEL EVMSG64

Pump Type	N°																											
	4	5-2	5-3	5-4	5-5	6	7	12	21	21-1	31	32-1	39-1	43-1	43-2	43-3	43-4	43-5	43-6	44-1	44-2	46	47	48	51	52-1	52-2	53
EVMSG64 1-1/4.0	1	/	/	1	1	1	1	1	/	1	1	1	/	1	1	/	/	1	1	/	1	1	1	1	/	/	1	1
EVMSG64 1-0/5.5	1	/	/	1	1	1	1	1	1	/	1	1	/	1	1	/	/	1	1	/	1	1	1	1	/	/	1	1
EVMSG64 2-2/7.5	1	1	/	1	1	1	1	1	/	2	1	1	/	1	2	/	/	1	1	/	1	1	1	1	/	/	1	2
EVMSG64 2-1/11	1	1	/	1	1	1	1	1	1	1	1	1	/	1	2	/	/	1	1	/	1	1	1	1	/	/	1	2
EVMSG64 2-0/15	1	1	/	1	1	1	1	1	2	/	1	1	/	1	2	/	/	1	1	/	1	1	1	1	/	/	1	2
EVMSG64 3-2/15	1	1	1	1	1	1	1	1	1	2	1	1	/	1	2	1	1	1	1	1	1	1	1	1	/	1	1	2
EVMSG64 3-1/15	1	1	1	1	1	1	1	1	2	1	1	1	/	1	2	1	1	1	1	1	1	1	1	1	/	1	1	2
EVMSG64 3-0/18.5	1	1	1	1	1	1	1	1	3	/	1	1	/	1	2	1	1	1	1	1	1	1	1	1	/	1	1	2
EVMSG64 4-2/18.5	1	2	1	1	1	1	1	1	2	2	1	1	/	1	3	1	1	1	1	1	1	1	1	1	/	1	1	4
EVMSG64 4-1/22	1	2	1	1	1	1	1	1	3	1	1	1	/	1	3	1	1	1	1	1	1	1	1	1	/	1	1	4
EVMSG64 4-0/22	1	2	1	1	1	1	1	1	4	/	1	1	/	1	3	1	1	1	1	1	1	1	1	1	/	1	1	4
EVMSG64 4-0/30	1	2	1	1	1	1	1	1	4	/	1	1	/	1	3	1	1	1	1	1	1	1	1	1	/	1	1	4
EVMSG64 5-2/30	1	3	1	1	1	1	1	1	3	2	1	1	/	1	4	1	1	1	1	1	1	1	1	1	/	1	1	5
EVMSG64 5-1/30	1	3	1	1	1	1	1	1	4	1	1	1	/	1	4	1	1	1	1	1	1	1	1	1	/	1	1	5
EVMSG64 5-0/30	1	3	1	1	1	1	1	1	5	/	1	1	/	1	4	1	1	1	1	1	1	1	1	1	/	1	1	5
EVMSG64 6-2/30	1	4	1	1	1	1	1	1	4	2	1	1	/	1	5	1	1	1	1	1	1	1	1	1	/	1	1	6
EVMSG64 6-1/37	1	4	1	1	1	1	1	1	5	1	1	/	1	1	5	1	1	1	1	1	1	1	1	1	1	1	1	6
EVMSG64 6-0/37	1	4	1	1	1	1	1	1	6	/	1	/	1	1	5	1	1	1	1	1	1	1	1	1	1	1	1	6
EVMSG64 7-2/37	1	5	1	1	1	1	1	1	5	2	1	/	1	1	6	1	1	1	1	1	1	1	1	1	1	1	1	7
EVMSG64 7-1/37	1	5	1	1	1	1	1	1	6	1	1	/	1	1	6	1	1	1	1	1	1	1	1	1	1	1	1	7
EVMSG64 7-1/45	1	5	1	1	1	1	1	1	6	1	1	/	1	1	6	1	1	1	1	1	1	1	1	1	1	1	1	7
EVMSG64 7-0/45	1	5	1	1	1	1	1	1	7	/	1	/	1	1	6	1	1	1	1	1	1	1	1	1	1	1	1	7
EVMSG64 8-2/45	1	6	1	1	1	1	1	1	6	2	1	/	1	1	7	1	1	1	1	1	1	1	1	1	1	1	1	8
EVMSG64 8-1/45	1	6	1	1	1	1	1	1	7	1	1	/	1	1	7	1	1	1	1	1	1	1	1	1	1	1	1	8

shaft in EN 1.4462 (AISI 329A)

Pump Type	N°																											
	56	70-1	70-2	75	75-1	81	107	111-1	111-3	111-4	111-5	115-1	115-4	115-5	120-1	120-2	120-3	120-5	120-6	120-7	120-8	120-9	120-12	120-13	128-1	128-2	128-3	128-6
EVMSG64 1-1/4.0	/	/	1	2	4	1	1	1	1	1	1	2	1	1	4	2	4	/	4	/	/	4	1	4	4	4	/	4
EVMSG64 1-0/5.5	/	/	1	2	4	1	1	1	1	1	1	2	1	1	4	2	4	/	4	/	/	4	1	4	4	4	4	/
EVMSG64 2-2/7.5	/	/	1	2	4	2	2	1	1	1	1	2	1	1	4	2	4	/	4	/	/	4	1	4	4	4	4	/
EVMSG64 2-1/11	/	/	1	2	4	2	2	1	1	1	1	2	1	1	4	2	4	/	4	/	/	4	1	4	4	4	4	/
EVMSG64 2-0/15	/	/	1	2	4	2	2	1	1	1	1	2	1	1	4	2	4	/	4	/	/	4	1	4	4	4	4	/
EVMSG64 3-2/15	/	/	1	2	4	2	3	1	1	1	1	2	1	1	4	2	4	/	4	/	/	4	1	4	4	4	4	/
EVMSG64 3-1/15	/	/	1	2	4	2	3	1	1	1	1	2	1	1	4	2	4	/	4	/	/	4	1	4	4	4	4	/
EVMSG64 3-0/18.5	/	/	1	2	4	2	3	1	1	1	1	2	1	1	4	2	4	/	4	/	/	4	1	4	4	4	4	/
EVMSG64 4-2/18.5	/	/	1	2	4	3	4	1	1	1	1	2	1	1	4	2	4	/	4	/	/	4	1	4	4	4	4	/
EVMSG64 4-1/22	/	/	1	2	4	3	4	1	1	1	1	2	1	1	4	2	4	/	4	/	/	4	1	4	4	4	4	/
EVMSG64 4-0/22	/	/	1	2	4	3	4	1	1	1	1	2	1	1	4	2	4	/	4	/	/	4	1	4	4	4	4	/
EVMSG64 4-0/30	/	/	1	2	4	3	4	1	1	1	1	2	1	1	4	2	4	/	4	/	/	4	1	4	4	4	4	/
EVMSG64 5-2/30	/	/	1	2	4	4	5	1	1	1	1	2	1	1	4	2	4	/	4	/	/	4	1	4	4	4	4	/
EVMSG64 5-1/30	/	/	1	2	4	4	5	1	1	1	1	2	1	1	4	2	4	/	4	/	/	4	1	4	4	4	4	/
EVMSG64 5-0/30	/	/	1	2	4	4	5	1	1	1	1	2	1	1	4	2	4	/	4	/	/	4	1	4	4	4	4	/
EVMSG64 6-2/30	/	/	1	2	4	5	6	1	1	1	1	2	1	1	4	2	4	/	4	/	/	4	1	4	4	4	4	/
EVMSG64 6-1/37	1	1	1	2	4	5	6	1	1	1	1	2	1	1	4	2	4	4	2	3	4	4	1	4	4	4	4	/
EVMSG64 6-0/37	1	1	1	2	4	5	6	1	1	1	1	2	1	1	4	2	4	4	2	3	4	4	1	4	4	4	4	/
EVMSG64 7-2/37	1	1	1	2	4	6	7	1	1	1	1	2	1	1	4	2	4	4	2	3	4	4	1	4	4	4	4	/
EVMSG64 7-1/37	1	1	1	2	4	6	7	1	1	1	1	2	1	1	4	2	4	4	2	3	4	4	1	4	4	4	4	/
EVMSG64 7-1/45	1	1	1	2	4	6	7	1	1	1	1	2	1	1	4	2	4	4	2	3	4	4	1	4	4	4	4	/
EVMSG64 7-0/45	1	1	1	2	4	6	7	1	1	1	1	2	1	1	4	2	4	4	2	3	4	4	1	8	4	4	8	/
EVMSG64 8-2/45	1	1	1	2	4	7	8	1	1	1	1	2	1	1	4	2	4	4	2	3	4	4	1	8	4	4	8	/
EVMSG64 8-1/45	1	1	1	2	4	7	8	1	1	1	1	2	1	1	4	2	4	4	2	3	4	4	1	8	4	4	8	/

EBARA Pumps Europe S.p.A. reserves the right to make changes without prior notice.

QUANTITY FOR MODEL EVMSG64

Pump Type	N°																							
	130-1	130-2	130-4	131-1	135-1	135-2	135-3	135-4	135-5	135-6	137-1	137-2	140	140-1	140-2	150	162	212	212-1	212-2	212-3	245	273-1	274-2
EVMSG64 1-1/4.0	3	4	/	1	4	2	/	/	1	4	1	1	2	/	/	/	1	1	4	1	1	2	4	/
EVMSG64 1-0/5.5	3	4	/	1	4	2	/	/	1	/	1	1	2	/	/	/	1	1	4	1	1	2	4	/
EVMSG64 2-2/7.5	3	4	/	1	4	2	/	/	1	/	1	1	2	/	/	/	1	1	4	1	1	2	4	/
EVMSG64 2-1/11	3	4	/	1	4	2	/	/	1	/	1	1	2	/	/	/	1	1	4	1	1	2	4	/
EVMSG64 2-0/15	3	4	/	1	4	2	/	/	1	/	1	1	2	/	/	/	1	1	4	1	1	2	4	/
EVMSG64 3-2/15	3	4	/	1	4	2	/	/	1	/	1	1	2	/	/	/	1	1	4	1	1	2	4	/
EVMSG64 3-1/15	3	4	/	1	4	2	/	/	1	/	1	1	2	/	/	/	1	1	4	1	1	2	4	/
EVMSG64 3-0/18.5	3	4	/	1	4	2	/	/	1	/	1	1	2	/	/	/	1	1	4	1	1	2	4	/
EVMSG64 4-2/18.5	3	4	/	1	4	2	/	/	1	/	1	1	2	/	/	/	1	1	4	1	1	2	4	/
EVMSG64 4-1/22	3	4	/	1	4	2	/	/	1	/	1	1	2	/	/	/	1	1	4	1	1	2	4	/
EVMSG64 4-0/22	3	4	/	1	4	2	/	/	1	/	1	1	2	/	/	/	1	1	4	1	1	2	4	/
EVMSG64 4-0/30	3	4	/	1	4	2	/	/	1	/	1	1	2	/	/	/	1	1	4	1	1	2	4	/
EVMSG64 5-2/30	3	4	/	1	4	2	/	/	1	/	1	1	2	/	/	/	1	1	4	1	1	2	4	/
EVMSG64 5-1/30	3	4	/	1	4	2	/	/	1	/	1	1	2	/	/	/	1	1	4	1	1	2	4	/
EVMSG64 5-0/30	3	4	/	1	4	2	/	/	1	/	1	1	2	/	/	/	1	1	4	1	1	2	4	/
EVMSG64 6-2/30	3	4	/	1	4	2	/	/	1	/	1	1	2	/	/	/	1	1	4	1	1	2	4	/
EVMSG64 6-1/37	3	4	1	1	4	2	4	3	1	/	1	1	/	1	1	1	1	1	4	1	1	2	4	1
EVMSG64 6-0/37	3	4	1	1	4	2	4	3	1	/	1	1	/	1	1	1	1	1	4	1	1	2	4	1
EVMSG64 7-2/37	3	4	1	1	4	2	4	3	1	/	1	1	/	1	1	1	1	1	4	1	1	2	4	1
EVMSG64 7-1/37	3	4	1	1	4	2	4	3	1	/	1	1	/	1	1	1	1	1	4	1	1	2	4	1
EVMSG64 7-1/45	3	4	1	1	4	2	4	3	1	/	1	1	/	1	1	1	1	1	4	1	1	2	4	1
EVMSG64 7-0/45	3	4	1	1	4	2	4	3	1	/	1	1	/	1	1	1	1	1	4	1	1	2	4	1
EVMSG64 8-2/45	3	4	1	1	4	2	4	3	1	/	1	1	/	1	1	1	1	1	4	1	1	2	4	1
EVMSG64 8-1/45	3	4	1	1	4	2	4	3	1	/	1	1	/	1	1	1	1	1	4	1	1	2	4	1

BEARINGS EVMSG64

Pump Type	N° 56
EVMSG64 1-1/4.0	/
EVMSG64 1-0/5.5	/
EVMSG64 2-2/7.5	/
EVMSG64 2-1/11	/
EVMSG64 2-0/15	/
EVMSG64 3-2/15	/
EVMSG64 3-1/15	/
EVMSG64 3-0/18.5	/
EVMSG64 4-2/18.5	/
EVMSG64 4-1/22	/
EVMSG64 4-0/22	/
EVMSG64 4-0/30	/
EVMSG64 5-2/30	/
EVMSG64 5-1/30	/
EVMSG64 5-0/30	/
EVMSG64 6-2/30	/
EVMSG64 6-1/37	6315 ZZ C3
EVMSG64 6-0/37	6315 ZZ C3
EVMSG64 7-2/37	6315 ZZ C3
EVMSG64 7-1/37	6315 ZZ C3
EVMSG64 7-1/45	6315 ZZ C3
EVMSG64 7-0/45	6315 ZZ C3
EVMSG64 8-2/45	6315 ZZ C3
EVMSG64 8-1/45	6315 ZZ C3

EBARA Pumps Europe S.p.A. reserves the right to make changes without prior notice.

PERFORMANCE CURVE
EVMS(L)90

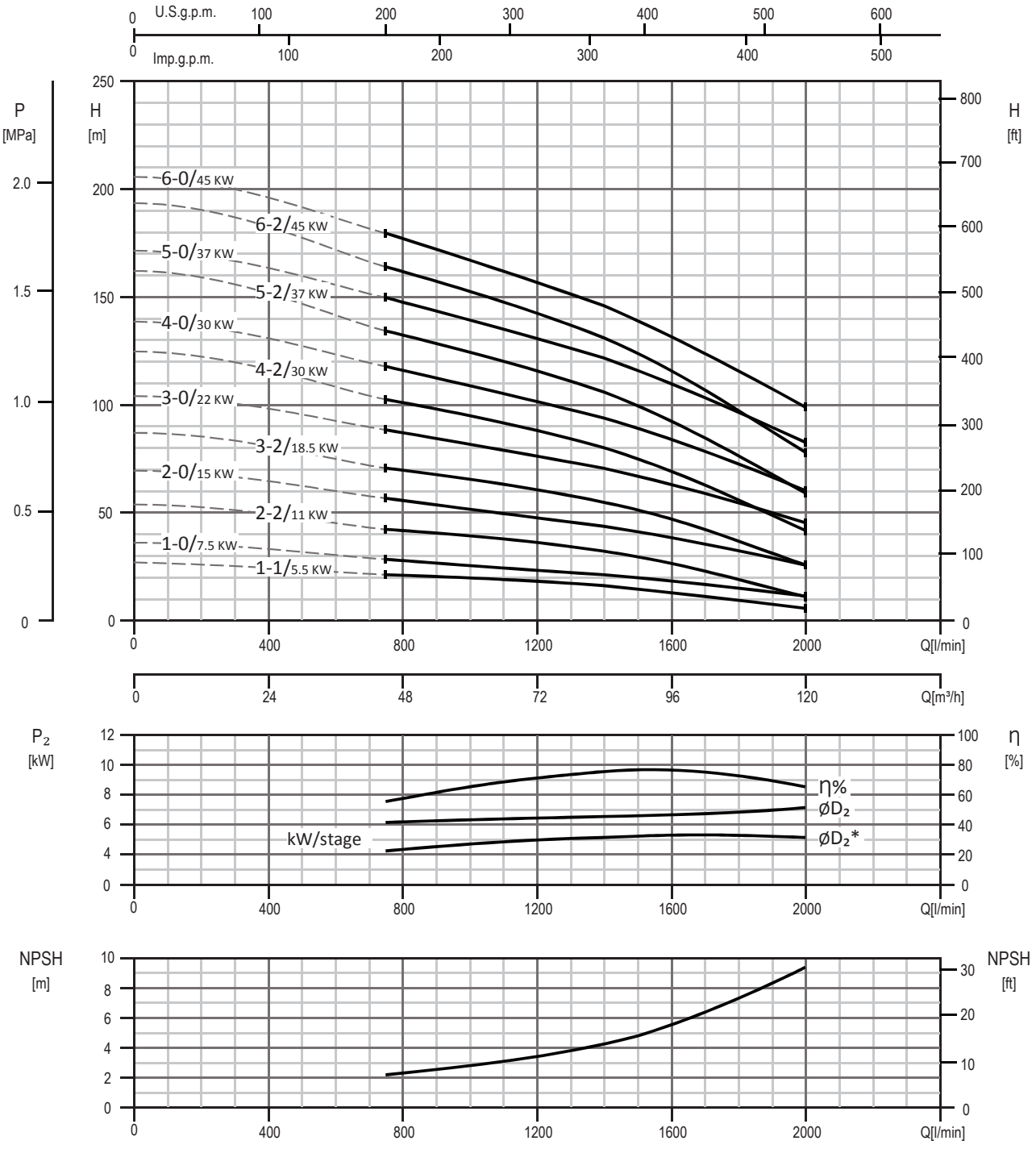

Test standard: ISO 9906:2012 - Grade 3B

EBARA Pumps Europe S.p.A. reserves the right to make changes without prior notice.

TECHNICAL DATA
EVMS(L)90

Dimensional sketch

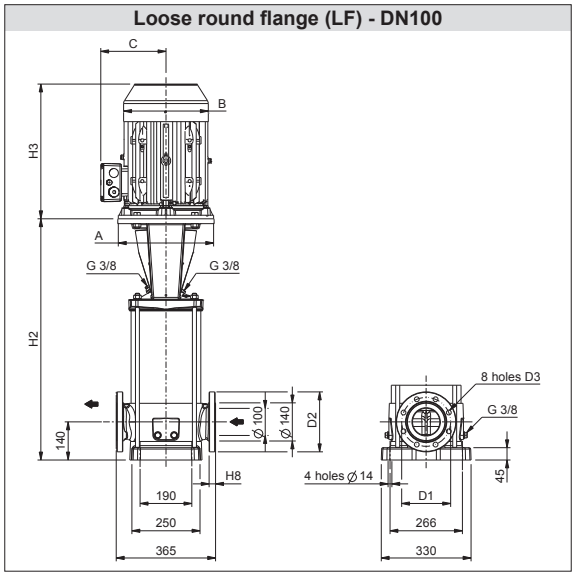

Dimensions [mm] and Weights [Kg]

Pump Type	Pmax [MPa]	Motor					Loose round flange (LF)							
		kW	Size	A Ø	B	C	H2	H2+H3	D1	D2	D3	H8	Weight Pump	Weight Pump + Motor
EVMS(L)90 1-1/5.5	1.6	5.5	132	300	220	152	671	1070	180	220	18	24	77.9	116.9
EVMS(L)90 1-0/7.5	1.6	7.5	132	300	220	152	671	1090	180	220	18	24	77.9	123.9
EVMS(L)90 2-2/11	1.6	11	160	350	259	180	794	1233	180	220	18	24	90.2	152.7
EVMS(L)90 2-0/15	1.6	15	160	350	311	240	794	1289	180	220	18	24	90.2	191.2
EVMS(L)90 3-2/18.5	1.6	18.5	160	350	311	240	887	1382	180	220	18	24	95.8	204.8
EVMS(L)90 3-0/22	1.6	22	180	350	354	260	887	1439	180	220	18	24	95.6	230.6
EVMS(L)90 4-2/30	1.6	30	200	400	354	280	980	1532	180	220	18	24	106.1	274.1
EVMS(L)90 4-0/30	1.6	30	200	400	354	280	980	1532	180	220	18	24	106.2	274.2
EVMS(L)90 5-2/37	2.5	37	200	400	382	295	1090	1767	180	220	18	24	129.8	389.8
EVMS(L)90 5-0/37	2.5	37	200	400	382	295	1090	1767	190	235	22	30	128.6	388.6
EVMS(L)90 6-2/45	2.5	45	225	450	449	335	1183	1949	190	235	22	30	139.7	513.7
EVMS(L)90 6-0/45	2.5	45	225	450	449	335	1183	1949	190	235	22	30	139.7	513.7

1.6 MPa=16 bar; 2.5 MPa=25 bar

EBARA Pumps Europe S.p.A. reserves the right to make changes without prior notice.

SECTIONAL VIEW
EVMS(L)90

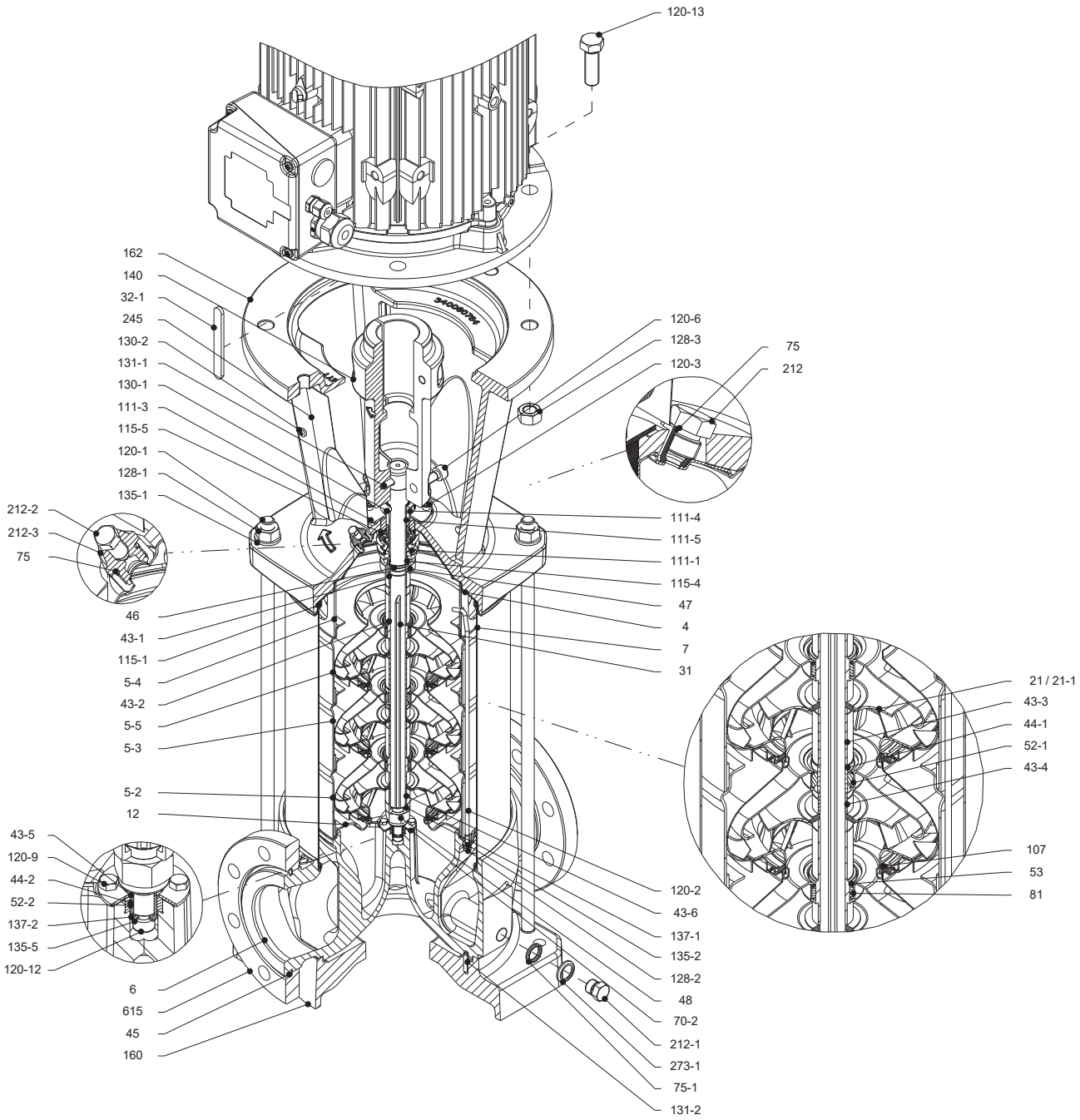

Pump without ball bearing
up to 30 kW

EBARA Pumps Europe S.p.A. reserves the right to make changes without prior notice.

SECTIONAL VIEW
EVMS(L)90

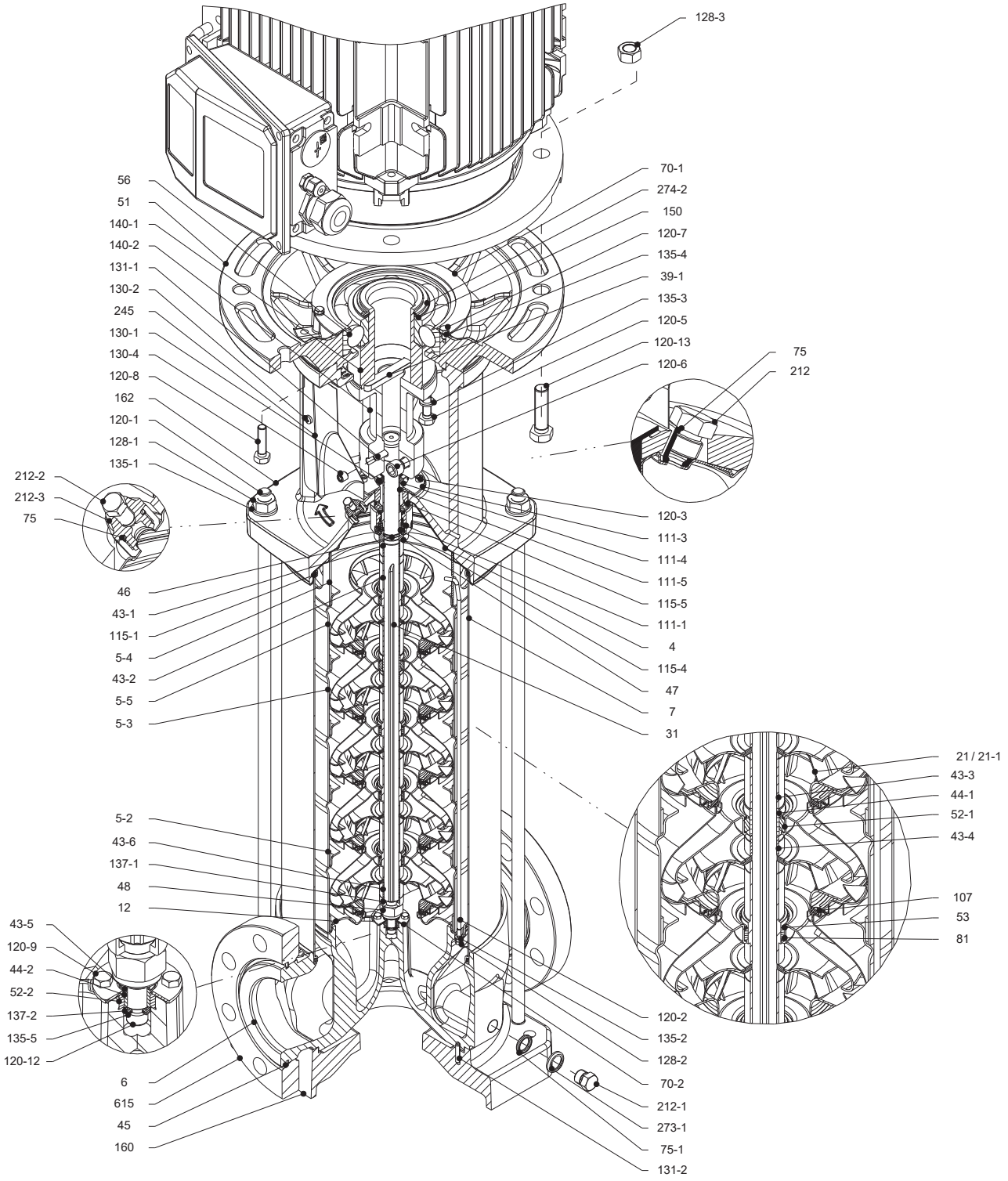

Pump with single ball bearing
above 37 kW

EBARA Pumps Europe S.p.A. reserves the right to make changes without prior notice.

SECTIONAL TABLE
EVMS(L)90

N°	PART NAME		MATERIAL		DIMENSIONS	STANDARD
			EVMS	EVMSL		
4	Casing cover		EN 1.4301 (AISI 304)	EN 1.4404 (AISI 316L)		
5-2	Intermediate casing		EN 1.4301 (AISI 304)	EN 1.4404 (AISI 316L)		
5-3	Intermediate casing with bearing		EN 1.4301 (AISI 304)	EN 1.4404 (AISI 316L)		
5-4	Discharge casing		EN 1.4301 (AISI 304)	EN 1.4404 (AISI 316L)		
5-5	Top intermediate casing		EN 1.4301 (AISI 304)	EN 1.4404 (AISI 316L)		
6	Bottom casing		EN 1.4308 (ASTM CF8)	EN 1.4408 (ASTM CF8M)		
7	Outer casing		EN 1.4301 (AISI 304)	EN 1.4404 (AISI 316L)		
12	Suction cover		EN 1.4301 (AISI 304)	EN 1.4404 (AISI 316L)		
21	Impeller		EN 1.4301 (AISI 304)	EN 1.4404 (AISI 316L)		
21-1	Reduced impeller		EN 1.4301 (AISI 304)	EN 1.4404 (AISI 316L)		
31	Shaft		EN 1.4301 (AISI 304)	EN 1.4462 (AISI 329A)		
32-1	Adjuster key		EN 1.4301 (AISI 304)			
39-1	Coupling key	above 37 kW	Carbon Steel			
43-1	Shaft sleeve (mechanical seal)		EN 1.4301 (AISI 304)	EN 1.4404 (AISI 316L)		
43-2	Shaft sleeve (intermediate)		EN 1.4301 (AISI 304)	EN 1.4404 (AISI 316L)		
43-3	Shaft sleeve (bearing)		EN 1.4301 (AISI 304)	EN 1.4404 (AISI 316L)		
43-4	Shaft sleeve (adjustment)		EN 1.4301 (AISI 304)	EN 1.4404 (AISI 316L)		
43-5	Shaft sleeve (last stage)		EN 1.4301 (AISI 304)	EN 1.4404 (AISI 316L)		
43-6	Shaft sleeve (adjustment)		EN 1.4301 (AISI 304)	EN 1.4404 (AISI 316L)		
44-1	Shaft sleeve bearing		Tungsten carbride			
44-2	Shaft sleeve (bearing)		Tungsten carbride			
45	Flange holder		EN 1.4301 (AISI 304)			
46	Ring (mechanical seal)		EN 1.4404 (AISI 316L)			
47	Ring holder		EN 1.4404 (AISI 316L)			
48	Impeller nut		EN 1.4301 (AISI 304) with inox insert	EN 1.4401 (AISI 316) with inox insert		
51	Motor adapter	above 37 kW	Cast Iron EN GJL250 EN 1561			
52-1	Sleeve bearing		Tungsten carbride			
52-2	Bearing sleeve (bottom casing)		Tungsten carbride			
53	Bush holder		EN 1.4301 (AISI 304)	EN 1.4404 (AISI 316L)		
56	Ball bearing	above 37 kW	see table page 143			
70-1	Ring for ball bearing	above 37 kW	EN 1.4301 (AISI 304)			
70-2	Ring for bearing sleeve		EN 1.4301 (AISI 304)	EN 1.4404 (AISI 316L)		
75	O-Ring (priming plug)		EPDM / FPM		Ø12.37x2.62	OR 3050
75-1	O-Ring (drainage plug)		EPDM / FPM			
81	Bush		PTFE			
107	Liner ring		EN 1.4301 (AISI 304) + PPS	EN 1.4404 (AISI 316L) + PPS		
111-1	Mechanical seal		see pages 6-7			
111-3	Mechanical seal seat		EN 1.4301 (AISI 304)	EN 1.4401 (AISI 316)		
111-4	Seal holder		EN 1.4404 (AISI 316L)			
111-5	Mechanical seal cartridge sleeve		EN 1.4301 (AISI 304)	EN 1.4404 (AISI 316L)		
115-1	O-Ring (outer casing)		EPDM / FPM		Ø240.66x5.34	OR 6945
115-4	O-Ring (cartridge sleeve)		EPDM / FPM		Ø23.39x3.53	OR 4093
115-5	O-Ring (seal flange)		EPDM / FPM		Ø44.04x3.53	OR 4175
120-1	Tie rod		EN 1.4057 (AISI 431)			
120-2	Tie rod (stage)		EN 1.4301 (AISI 304)	EN 1.4401 (AISI 316)		
120-3	Screw (seal flange)		A2-70		M5x12	ISO 4762
120-5	Screw (extension coupling)	above 37 kW	Galvanized steel 8.8 strength class ISO 898/1		M10x30	ISO 4017

EBARA Pumps Europe S.p.A. reserves the right to make changes without prior notice.

SECTIONAL TABLE
EVMS(L)90

N°	PART NAME		MATERIAL EVMS	MATERIAL EVMSL	DIMENSIONS	STANDARD
120-6	Screw (pump coupling)	up to 7.5 kW	Galvanized steel 8.8 strength class ISO 898/1		M8x25	ISO 4762
		from 11 kW to 30 kW	Galvanized steel 8.8 strength class ISO 898/1		M10x30	ISO 4762
		above 37 kW	Galvanized steel 8.8 strength class ISO 898/1		M12x30	ISO 4762
120-7	Screw (ball bearing)	above 37 kW	Galvanized steel 8.8 strength class ISO 898/1		M6x10	ISO 4017
120-8	Screw (motor adapter)	above 37 kW	Galvanized steel 8.8 strength class ISO 898/1		M10x40	ISO 4017
120-9	Screw (bottom casing)		A2-70		M5x8	ISO 4017
120-12	Screw (shaft)		A2-70		M6x16	ISO 4762
120-13	Screw for motor	MEC 132	Galvanized steel 8.8 strength class ISO 898/1		M12x45	ISO 4017
		MEC 160-180	Galvanized steel 8.8 strength class ISO 898/1		M16x50	ISO 4017
		MEC 200-225	Galvanized steel 8.8 strength class ISO 898/1		M16x60	ISO 4014
128-1	Nut (tie rod)		A2-70		M16	ISO 4032
128-2	Nut (casing tie rod)		A2-70		M5	ISO 4032
128-3	Nut (motor)	MEC 132	Galvanized steel		M12	ISO 4032
		MEC 160-180-200-225	Galvanized steel		M16	ISO 4032
130-1	Set screw		EN 1.4301 (AISI 304)		M6x8	ISO 4026
130-2	Screw for coupling guard		A2-70		M5x6	UNI 7687
130-4	Set screw (pump coupling)	above 37 kW	Galvanized steel		M10x10	ISO 4026
131-1	Pin for shaft		Carbon Steel		Ø8X50	ISO 2338
131-2	Elastic pin		EN 1.4301 (AISI 304)		Ø6x26	ISO 8752
135-1	Washer (tie rod)		EN 1.4301 (AISI 304)		Ø16	ISO 7089
135-2	Washer (casing tie rod)		EN 1.4301 (AISI 304)	EN 1.4404 (AISI 316)	Ø5,1	UNI 1751
135-3	Washer (extension coupling)	above 37 kW	Galvanized steel		Ø10,2	UNI 1751
135-4	Washer (ball bearing)	above 37 kW	Plated carbon steel		Ø6,1	UNI 1751
135-5	Washer (impeller nut)		EN 1.4301 (AISI 304)	EN 1.4404 (AISI 316L)		
137-1	Impeller spacer		EN 1.4301 (AISI 304)	EN 1.4404 (AISI 316L)		
137-2	Shaft spacer		EN 1.4301 (AISI 304)	EN 1.4404 (AISI 316L)		
140	Coupling	up to 30 kW	Cast Iron EN GJL250 EN 1561			
140-1	Extension coupling	above 37 kW	Carbon Steel			
140-2	Coupling	above 37 kW	Carbon Steel			
150	Spacer (snap ring)	above 37 kW	Carbon Steel			
160	Base		Cast Iron EN GJL200 EN 1561			
162	Motor bracket	up to 30 kW	Cast Iron EN GJS 400-15 EN 1563			
212	Priming plug		EN 1.4301 (AISI 304)	EN 1.4404 (AISI 316L)		
212-1	Drainage plug		EN 1.4301 (AISI 304)	EN 1.4404 (AISI 316L)		
212-2	Venting plug		EN 1.4401 (AISI 316)			
212-3	Priming plug		EN 1.4301 (AISI 304)	EN 1.4404 (AISI 316L)		
245	Coupling guard		EN 1.4301 (AISI 304)			
273-1	Washer (drainage plug)		EN 1.4301 (AISI 304)	EN 1.4404 (AISI 316L)		
274-2	C-type snap ring (coupling)	above 37 kW	Carbon Steel TC80		Ø75	UNI 7435
615	Loose flange		Cast Iron EN GJS 500-7 EN 1563			

EBARA Pumps Europe S.p.A. reserves the right to make changes without prior notice.

QUANTITY FOR MODEL EVMS(L)90

Pump Type	N°																											
	4	5-2	5-3	5-4	5-5	6	7	12	21	21-1	31	32-1	39-1	43-1	43-2	43-3	43-4	43-5	43-6	44-1	44-2	45	46	47	48	51	52-1	52-2
EVMS(L)90 1-1/5.5	1	/	/	1	1	1	1	1	/	1	1	1	/	1	1	/	/	1	1	/	1	4	1	1	1	/	/	1
EVMS(L)90 1-0/7.5	1	/	/	1	1	1	1	1	1	/	1	1	/	1	1	/	/	1	1	/	1	4	1	1	1	/	/	1
EVMS(L)90 2-2/11	1	/	1	1	1	1	1	1	/	2	1	1	/	1	1	1	1	1	1	1	1	4	1	1	1	/	1	1
EVMS(L)90 2-0/15	1	/	1	1	1	1	1	1	2	/	1	1	/	1	1	1	1	1	1	1	1	4	1	1	1	/	1	1
EVMS(L)90 3-2/18.5	1	1	1	1	1	1	1	1	1	2	1	1	/	1	2	1	1	1	1	1	1	4	1	1	1	/	1	1
EVMS(L)90 3-0/22	1	1	1	1	1	1	1	1	3	/	1	1	/	1	2	1	1	1	1	1	1	4	1	1	1	/	1	1
EVMS(L)90 4-2/30	1	2	1	1	1	1	1	1	2	2	1	1	/	1	3	1	1	1	1	1	1	4	1	1	1	/	1	1
EVMS(L)90 4-0/30	1	2	1	1	1	1	1	1	4	/	1	1	/	1	3	1	1	1	1	1	1	4	1	1	1	/	1	1
EVMS(L)90 5-2/37	1	3	1	1	1	1	1	1	3	2	1	/	1	1	4	1	1	1	1	1	1	4	1	1	1	1	1	1
EVMS(L)90 5-0/37	1	3	1	1	1	1	1	1	5	/	1	/	1	1	4	1	1	1	1	1	1	4	1	1	1	1	1	1
EVMS(L)90 6-2/45	1	4	1	1	1	1	1	1	5	1	1	/	1	1	5	1	1	1	1	1	1	4	1	1	1	1	1	1
EVMS(L)90 6-0/45	1	4	1	1	1	1	1	1	6	/	1	/	1	1	5	1	1	1	1	1	1	4	1	1	1	1	1	1

shaft in EN 1.4462 (AISI 329A) only for EVMSL

Pump Type	N°																											
	53	56	70-1	70-2	75	75-1	81	107	111-1	111-3	111-4	111-5	115-1	115-4	115-5	120-1	120-2	120-3	120-5	120-6	120-7	120-8	120-9	120-12	120-13	128-1	128-2	128-3
EVMS(L)90 1-1/5.5	1	/	/	1	2	4	1	1	1	1	1	1	2	1	1	4	2	4	/	4	/	/	4	1	4	4	4	4
EVMS(L)90 1-0/7.5	1	/	/	1	2	4	1	1	1	1	1	1	2	1	1	4	2	4	/	4	/	/	4	1	4	4	4	4
EVMS(L)90 2-2/11	1	/	/	1	2	4	1	2	1	1	1	1	2	1	1	4	2	4	/	4	/	/	4	1	4	4	4	4
EVMS(L)90 2-0/15	1	/	/	1	2	4	1	2	1	1	1	1	2	1	1	4	2	4	/	4	/	/	4	1	4	4	4	4
EVMS(L)90 3-2/18.5	3	/	/	1	2	4	2	3	1	1	1	1	2	1	1	4	2	4	/	4	/	/	4	1	4	4	4	4
EVMS(L)90 3-0/22	3	/	/	1	2	4	2	3	1	1	1	1	2	1	1	4	2	4	/	4	/	/	4	1	4	4	4	4
EVMS(L)90 4-2/30	4	/	/	1	2	4	3	4	1	1	1	1	2	1	1	4	2	4	/	4	/	/	4	1	4	4	4	4
EVMS(L)90 4-0/30	4	/	/	1	2	4	3	4	1	1	1	1	2	1	1	4	2	4	/	4	/	/	4	1	4	4	4	4
EVMS(L)90 5-2/37	5	1	1	1	2	4	4	5	1	1	1	1	2	1	1	4	2	4	4	2	3	4	4	1	4	4	4	4
EVMS(L)90 5-0/37	5	1	1	1	2	4	4	5	1	1	1	1	2	1	1	4	2	4	4	2	3	4	4	1	4	4	4	4
EVMS(L)90 6-2/45	6	1	1	1	2	4	5	6	1	1	1	1	2	1	1	4	2	4	4	2	3	4	4	1	8	4	4	8
EVMS(L)90 6-0/45	6	1	1	1	2	4	5	6	1	1	1	1	2	1	1	4	2	4	4	2	3	4	4	1	8	4	4	8

Pump Type	N°																											
	130-1	130-2	130-4	131-1	131-2	135-1	135-2	135-3	135-4	135-5	137-1	137-2	140	140-1	140-2	150	160	162	212	212-1	212-2	212-3	245	273-1	274-2	615		
EVMS(L)90 1-1/5.5	3	4	/	1	1	4	2	/	/	1	1	1	2	/	/	/	1	1	1	4	1	1	2	4	/	2		
EVMS(L)90 1-0/7.5	3	4	/	1	1	4	2	/	/	1	1	1	2	/	/	/	1	1	1	4	1	1	2	4	/	2		
EVMS(L)90 2-2/11	3	4	/	1	1	4	2	/	/	1	1	1	2	/	/	/	1	1	1	4	1	1	2	4	/	2		
EVMS(L)90 2-0/15	3	4	/	1	1	4	2	/	/	1	1	1	2	/	/	/	1	1	1	4	1	1	2	4	/	2		
EVMS(L)90 3-2/18.5	3	4	/	1	1	4	2	/	/	1	1	1	2	/	/	/	1	1	1	4	1	1	2	4	/	2		
EVMS(L)90 3-0/22	3	4	/	1	1	4	2	/	/	1	1	1	2	/	/	/	1	1	1	4	1	1	2	4	/	2		
EVMS(L)90 4-2/30	3	4	/	1	1	4	2	/	/	1	1	1	2	/	/	/	1	1	1	4	1	1	2	4	/	2		
EVMS(L)90 4-0/30	3	4	/	1	1	4	2	/	/	1	1	1	2	/	/	/	1	1	1	4	1	1	2	4	/	2		
EVMS(L)90 5-2/37	3	4	1	1	1	4	2	4	3	1	1	1	/	1	1	1	1	1	1	4	1	1	2	4	1	2		
EVMS(L)90 5-0/37	3	4	1	1	1	4	2	4	3	1	1	1	/	1	1	1	1	1	1	4	1	1	2	4	1	2		
EVMS(L)90 6-2/45	3	4	1	1	1	4	2	4	3	1	1	1	/	1	1	1	1	1	1	4	1	1	2	4	1	2		
EVMS(L)90 6-0/45	3	4	1	1	1	4	2	4	3	1	1	1	/	1	1	1	1	1	1	4	1	1	2	4	1	2		

EBARA Pumps Europe S.p.A. reserves the right to make changes without prior notice.

BEARINGS
EVMS(L)90

Pump Type	N° 56
EVMS(L)90 1-1/5.5	/
EVMS(L)90 1-0/7.5	/
EVMS(L)90 2-2/11	/
EVMS(L)90 2-0/15	/
EVMS(L)90 3-2/18.5	/
EVMS(L)90 3-0/22	/
EVMS(L)90 4-2/30	/
EVMS(L)90 4-0/30	/
EVMS(L)90 5-2/37	6315 ZZ C3
EVMS(L)90 5-0/37	6315 ZZ C3
EVMS(L)90 6-2/45	6315 ZZ C3
EVMS(L)90 6-0/45	6315 ZZ C3

EBARA Pumps Europe S.p.A. reserves the right to make changes without prior notice.

PERFORMANCE CURVE
EVMSG90

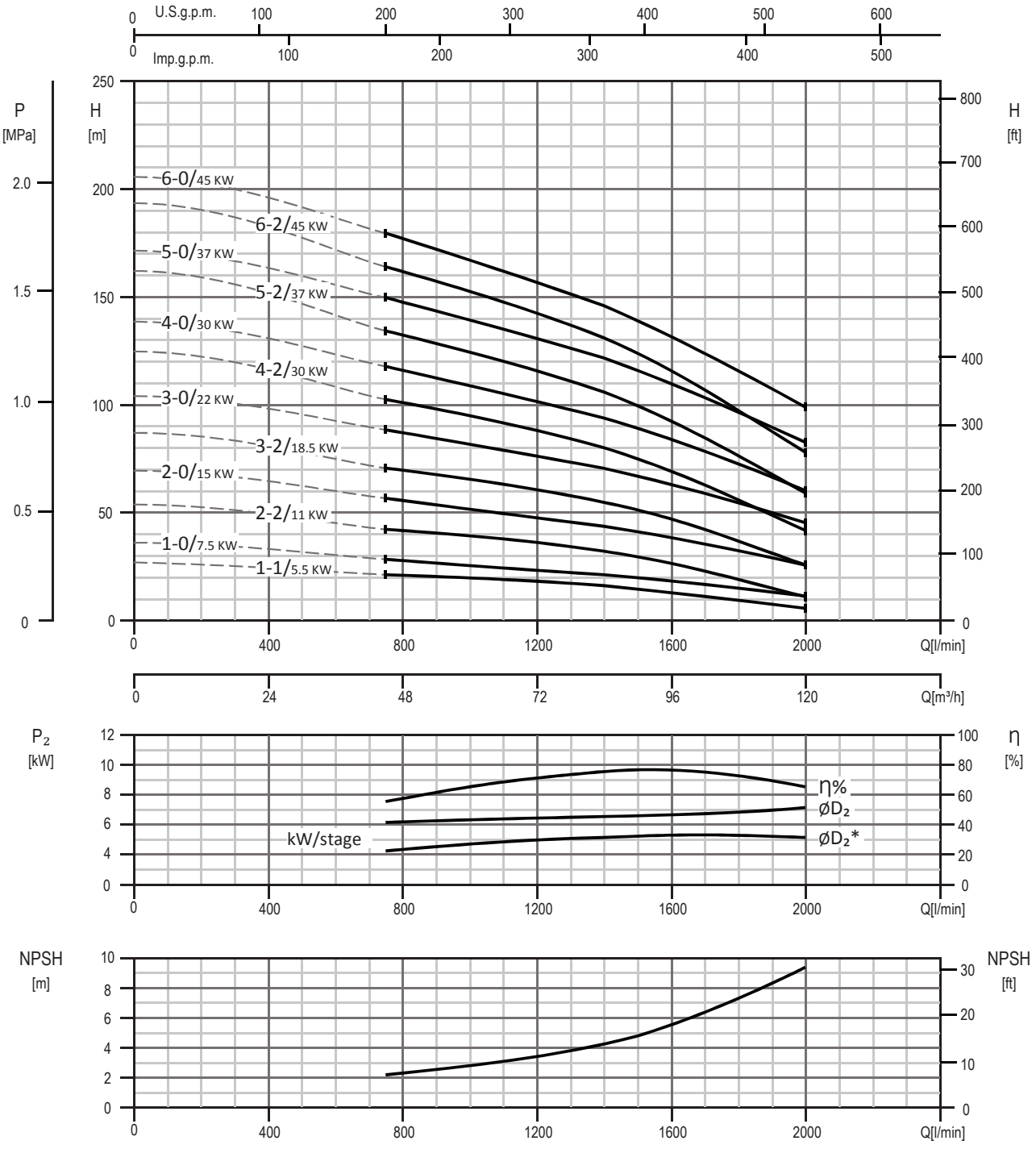

Test standard: ISO 9906:2012 - Grade 3B

EBARA Pumps Europe S.p.A. reserves the right to make changes without prior notice.

TECHNICAL DATA
EVMSG90

Dimensional sketch

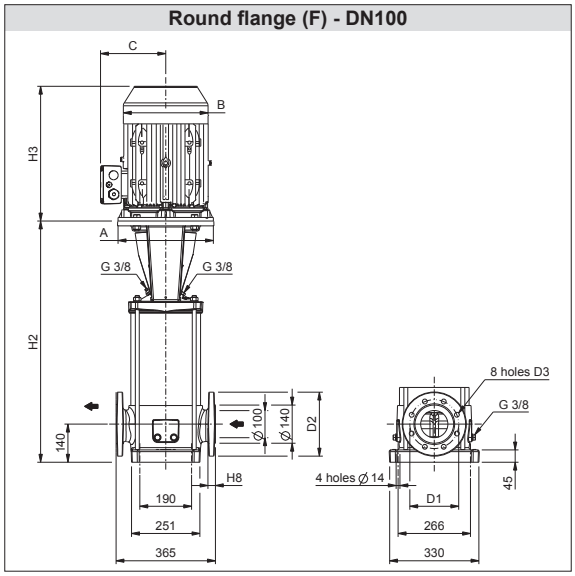

Dimensions [mm] and Weights [Kg]

Pump Type	Pmax [MPa]	Motor					Round flange (F)						Weight Pump	Weight Pump + Motor
		kW	Size	A Ø	B	C	H2	H2+H3	D1	D2	D3	H8		
EVMSG90 1-1/5.5	1.6	5.5	132	300	220	152	671	1070	180	235	18	24	74.9	113.9
EVMSG90 1-0/7.5	1.6	7.5	132	300	220	152	671	1090	180	235	18	24	74.9	120.9
EVMSG90 2-2/11	1.6	11	160	350	259	180	794	1233	180	235	18	24	87.2	149.7
EVMSG90 2-0/15	1.6	15	160	350	311	240	794	1289	180	235	18	24	87.2	188.2
EVMSG90 3-2/18.5	1.6	18.5	160	350	311	240	887	1382	180	235	18	24	92.8	201.8
EVMSG90 3-0/22	1.6	22	180	350	354	260	887	1439	180	235	18	24	92.6	227.6
EVMSG90 4-2/30	1.6	30	200	400	354	280	980	1532	180	235	18	24	103.1	271.1
EVMSG90 4-0/30	1.6	30	200	400	354	280	980	1532	180	235	18	24	103.1	271.1
EVMSG90 5-2/37	2.5	37	200	400	382	295	1090	1767	180	235	18	24	126.8	386.8
EVMSG90 5-0/37	2.5	37	200	400	382	295	1090	1767	190	254	22	31	127.0	387.0
EVMSG90 6-2/45	2.5	45	225	450	449	335	1183	1949	190	254	22	31	138.0	512.0
EVMSG90 6-0/45	2.5	45	225	450	449	335	1183	1949	190	254	22	31	138.0	512.0

1.6 MPa=16 bar; 2.5 MPa=25 bar

EBARA Pumps Europe S.p.A. reserves the right to make changes without prior notice.

SECTIONAL VIEW
EVMSG90

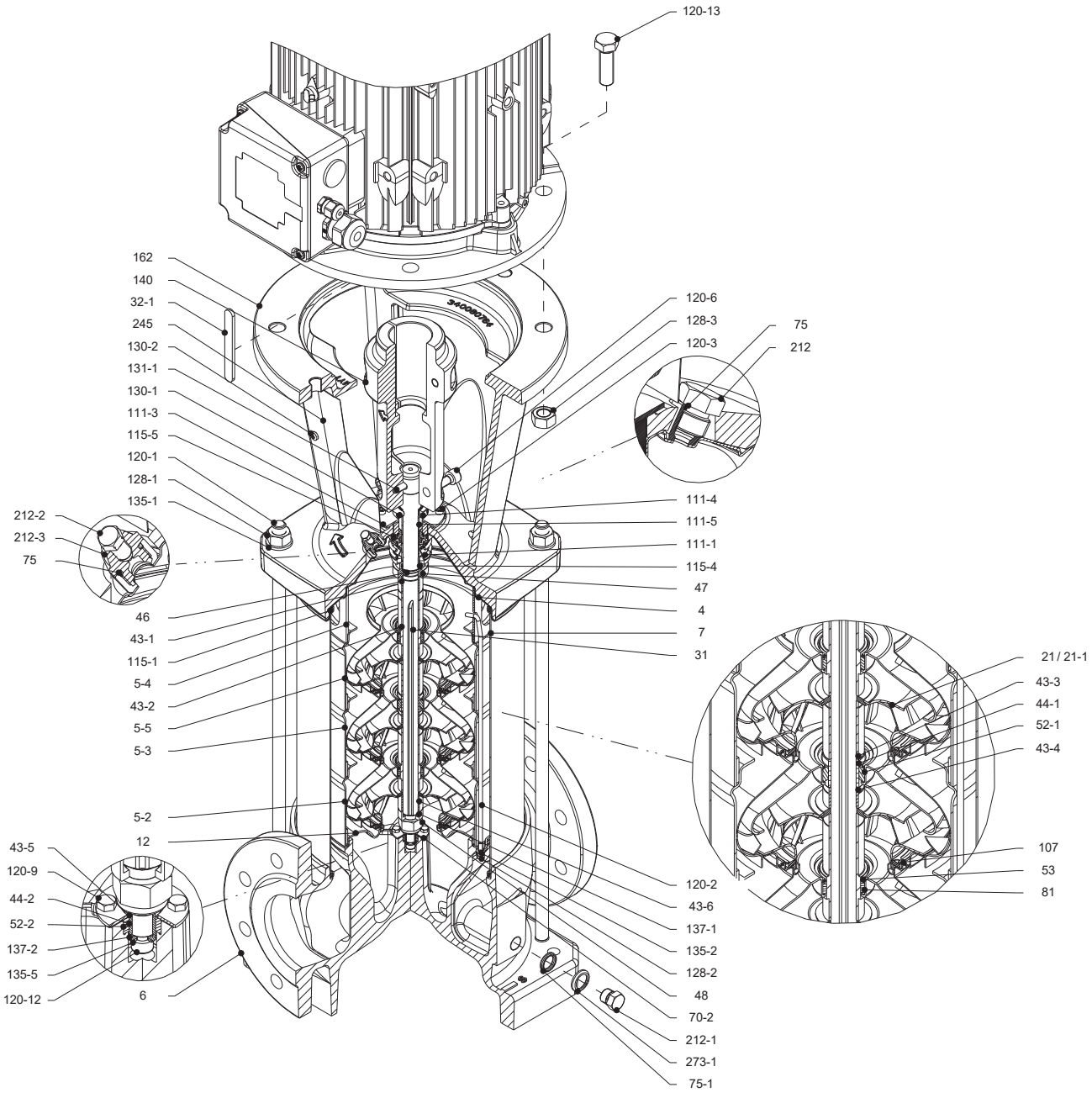

Pump without ball bearing
up to 30 kW

EBARA Pumps Europe S.p.A. reserves the right to make changes without prior notice.

SECTIONAL VIEW
EVMSG90

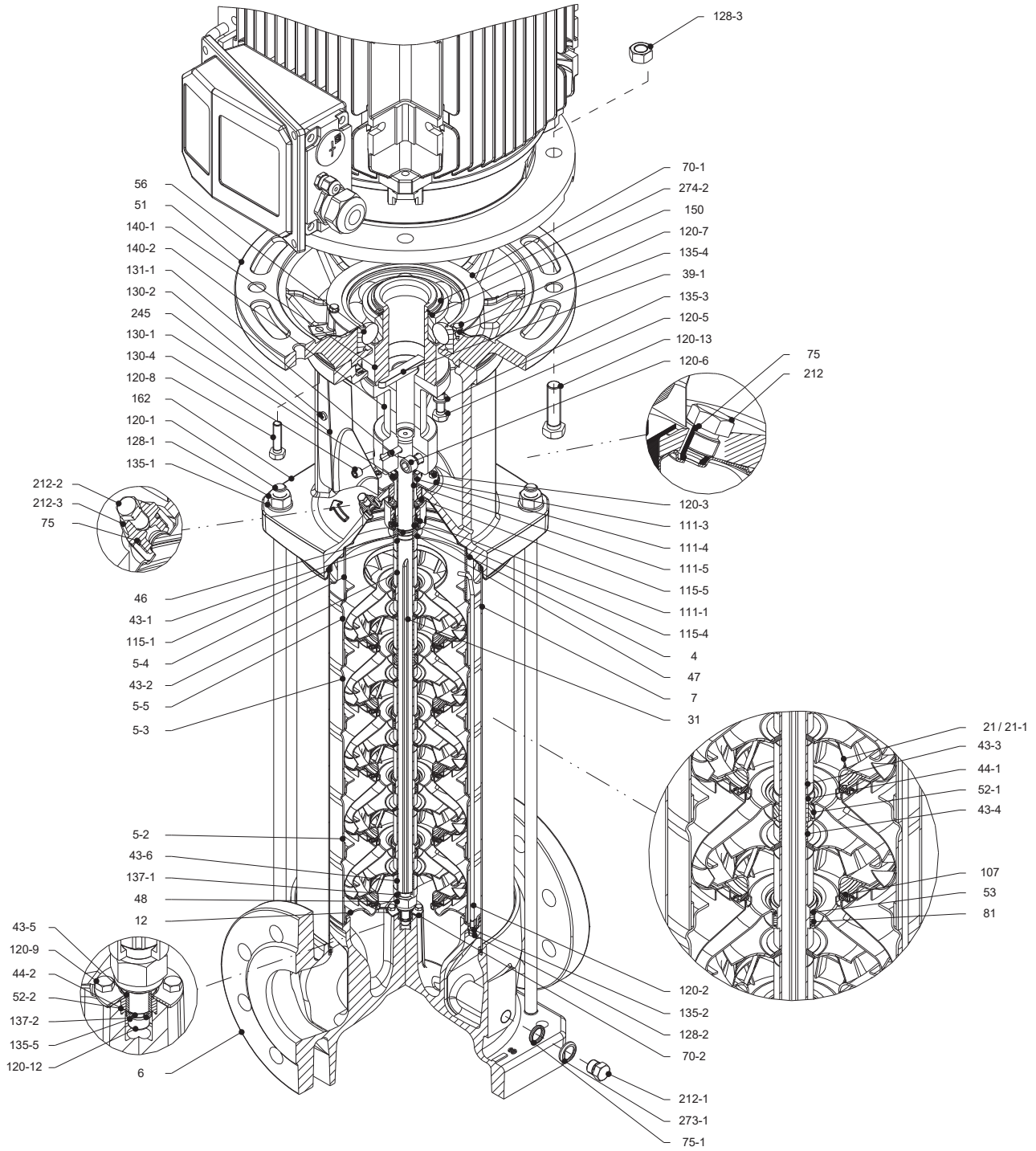

Pump with single ball bearing
above 37 kW

EBARA Pumps Europe S.p.A. reserves the right to make changes without prior notice.

SECTIONAL TABLE
EVMSG90

N°	PART NAME		MATERIAL EVMSG	DIMENSIONS	STANDARD
4	Casing cover		EN 1.4301 (AISI 304)		
5-2	Intermediate casing		EN 1.4301 (AISI 304)		
5-3	Intermediate casing with bearing		EN 1.4301 (AISI 304)		
5-4	Discharge casing		EN 1.4301 (AISI 304)		
5-5	Top intermediate casing		EN 1.4301 (AISI 304)		
6	Bottom casing		Cast Iron EN GJL-250 EN 1561 Cast Iron EN GJS 400-15 EN 1563		
7	Outer casing		EN 1.4301 (AISI 304)		
12	Suction cover		EN 1.4301 (AISI 304)		
21	Impeller		EN 1.4301 (AISI 304)		
21-1	Reduced impeller		EN 1.4301 (AISI 304)		
31	Shaft		EN 1.4301 (AISI 304)		
32-1	Adjuster key		EN 1.4301 (AISI 304)		
39-1	Coupling key	above 37 kW	Carbon Steel		
43-1	Shaft sleeve (mechanical seal)		EN 1.4301 (AISI 304)		
43-2	Shaft sleeve (intermediate)		EN 1.4301 (AISI 304)		
43-3	Shaft sleeve (bearing)		EN 1.4301 (AISI 304)		
43-4	Shaft sleeve (adjustment)		EN 1.4301 (AISI 304)		
43-5	Shaft sleeve (last stage)		EN 1.4301 (AISI 304)		
43-6	Shaft sleeve (adjustment)		EN 1.4301 (AISI 304)		
44-1	Shaft sleeve bearing		Tungsten carbride		
44-2	Shaft sleeve (bearing)		Tungsten carbride		
46	Ring (mechanical seal)		EN 1.4404 (AISI 316L)		
47	Ring holder		EN 1.4301 (AISI 304)		
48	Impeller nut		EN 1.4301 (AISI 304) with inox insert		
51	Motor adapter	above 37 kW	Cast Iron EN GJL250 EN 1561		
52-1	Sleeve bearing		Tungsten carbride		
52-2	Bearing sleeve (bottom casing)		Tungsten carbride		
53	Bush holder		EN 1.4301 (AISI 304)		
56	Ball bearing	above 37 kW	see table page 151		
70-1	Ring for ball bearing	above 37 kW	EN 1.4301 (AISI 304)		
70-2	Ring for bearing sleeve		EN 1.4301 (AISI 304)		
75	O-Ring (priming plug)		EPDM / FPM	Ø12.37x2.62	OR 3050
75-1	O-Ring (drainage plug)		EPDM / FPM		
81	Bush		PTFE		
107	Liner ring		EN 1.4301 (AISI 304) + PPS		
111-1	Mechanical seal		see pages 6-7		
111-3	Mechanical seal seat		EN 1.4301 (AISI 304)		
111-4	Seal holder		EN 1.4404 (AISI 316L)		
111-5	Mechanical seal cartridge sleeve		EN 1.4301 (AISI 304)		
115-1	O-Ring (outer casing)		EPDM / FPM	Ø240.66x5.34	OR 6945
115-4	O-Ring (cartridge sleeve)		EPDM / FPM	Ø23.39x3.53	OR 4093
115-5	O-Ring (seal flange)		EPDM / FPM	Ø44.04x3.53	OR 4175
120-1	Tie rod		EN 1.4057 (AISI 431)		
120-2	Tie rod (stage)		EN 1.4301 (AISI 304)		
120-3	Screw (seal flange)		A2-70	M5x12	ISO 4762
120-5	Screw (extension coupling)	above 37 kW	Galvanized steel 8.8 strength class ISO 898/1	M10x30	ISO 4017

EBARA Pumps Europe S.p.A. reserves the right to make changes without prior notice.

SECTIONAL TABLE
EVMSG90

N°	PART NAME		MATERIAL EVMSG	DIMENSIONS	STANDARD
120-6	Screw (pump coupling)	up to 7.5 kW	Galvanized steel 8.8 strength class ISO 898/1	M8x25	ISO 4762
		from 11 kW to 30 kW	Galvanized steel 8.8 strength class ISO 898/1	M10x30	ISO 4762
		above 37 kW	Galvanized steel 8.8 strength class ISO 898/1	M12x30	ISO 4762
120-7	Screw (ball bearing)	above 37 kW	Galvanized steel 8.8 strength class ISO 898/1	M6x10	ISO 4017
120-8	Screw (motor adapter)	above 37 kW	Galvanized steel 8.8 strength class ISO 898/1	M10x40	ISO 4017
120-9	Screw (bottom casing)		A2-70	M5x8	ISO 4017
120-12	Screw (shaft)		A2-70	M6x16	ISO 4762
120-13	Screw for motor	MEC 132	Galvanized steel 8.8 strength class ISO 898/1	M12x45	ISO 4017
		MEC 160-180	Galvanized steel 8.8 strength class ISO 898/1	M16x50	ISO 4017
		MEC 200-225	Galvanized steel 8.8 strength class ISO 898/1	M16x60	ISO 4014
128-1	Nut (tie rod)		A2-70	M16	ISO 4032
128-2	Nut (casing tie rod)		A2-70	M5	ISO 4032
128-3	Nut (motor)	MEC 132	Galvanized steel	M12	ISO 4032
		MEC 160-180-200-225	Galvanized steel	M16	ISO 4032
130-1	Set screw		EN 1.4301 (AISI 304)	M6x8	ISO 4026
130-2	Screw for coupling guard		A2-70	M5x6	UNI 7687
130-4	Set screw (pump coupling)	above 37 kW	Galvanized steel	M10x10	ISO 4026
131-1	Pin for shaft		Carbon Steel	Ø8X50	ISO 2338
135-1	Washer (tie rod)		EN 1.4301 (AISI 304)	Ø16	ISO 7089
135-2	Washer (casing tie rod)		EN 1.4301 (AISI 304)	Ø5,1	UNI 1751
135-3	Washer (extension coupling)	above 37 kW	Galvanized steel	Ø10,2	UNI 1751
135-4	Washer (ball bearing)	above 37 kW	Plated carbon steel	Ø6,1	UNI 1751
135-5	Washer (impeller nut)		EN 1.4301 (AISI 304)		
137-1	Impeller spacer		EN 1.4301 (AISI 304)		
137-2	Shaft spacer		EN 1.4301 (AISI 304)		
140	Coupling	up to 30 kW	Cast Iron EN GJL250 EN 1561		
140-1	Extension coupling	above 37 kW	Carbon Steel		
140-2	Coupling	above 37 kW	Carbon Steel		
150	Spacer (snap ring)	above 37 kW	Carbon Steel		
162	Motor bracket	up to 30 kW	Cast Iron EN GJS 400-15 EN 1563		
212	Priming plug		EN 1.4301 (AISI 304)		
212-1	Drainage plug		EN 1.4301 (AISI 304)		
212-2	Venting plug		EN 1.4401 (AISI 316)		
212-3	Priming plug		EN 1.4301 (AISI 304)		
245	Coupling guard		EN 1.4301 (AISI 304)		
273-1	Washer (drainage plug)		EN 1.4301 (AISI 304)		
274-2	C-type snap ring (coupling)	above 37 kW	Carbon Steel TC80	Ø75	UNI 7435

EBARA Pumps Europe S.p.A. reserves the right to make changes without prior notice.

QUANTITY FOR MODEL EVMSG90

Pump Type	N°																											
	4	5-2	5-3	5-4	5-5	6	7	12	21	21-1	31	32-1	39-1	43-1	43-2	43-3	43-4	43-5	43-6	44-1	44-2	46	47	48	51	52-1	52-2	53
EVMSG90 1-1/5.5	1	/	/	1	1	1	1	1	/	1	1	1	/	1	1	/	/	1	1	/	1	1	1	1	/	/	1	1
EVMSG90 1-0/7.5	1	/	/	1	1	1	1	1	1	/	1	1	/	1	1	/	/	1	1	/	1	1	1	1	/	/	1	1
EVMSG90 2-2/11	1	/	1	1	1	1	1	1	/	2	1	1	/	1	1	1	1	1	1	1	1	1	1	1	/	1	1	1
EVMSG90 2-0/15	1	/	1	1	1	1	1	1	2	/	1	1	/	1	1	1	1	1	1	1	1	1	1	1	/	1	1	1
EVMSG90 3-2/18.5	1	1	1	1	1	1	1	1	1	2	1	1	/	1	2	1	1	1	1	1	1	1	1	1	/	1	1	3
EVMSG90 3-0/22	1	1	1	1	1	1	1	1	3	/	1	1	/	1	2	1	1	1	1	1	1	1	1	1	/	1	1	3
EVMSG90 4-2/30	1	2	1	1	1	1	1	1	2	2	1	1	/	1	3	1	1	1	1	1	1	1	1	1	/	1	1	4
EVMSG90 4-0/30	1	2	1	1	1	1	1	1	4	/	1	1	/	1	3	1	1	1	1	1	1	1	1	1	/	1	1	4
EVMSG90 5-2/37	1	3	1	1	1	1	1	1	3	2	1	/	1	1	4	1	1	1	1	1	1	1	1	1	1	1	1	5
EVMSG90 5-0/37	1	3	1	1	1	1	1	1	5	/	1	/	1	1	4	1	1	1	1	1	1	1	1	1	1	1	1	5
EVMSG90 6-2/45	1	4	1	1	1	1	1	1	5	1	1	/	1	1	5	1	1	1	1	1	1	1	1	1	1	1	1	6
EVMSG90 6-0/45	1	4	1	1	1	1	1	1	6	/	1	/	1	1	5	1	1	1	1	1	1	1	1	1	1	1	1	6

Pump Type	N°																											
	56	70-1	70-2	75	75-1	81	107	111-1	111-3	111-4	111-5	115-1	115-4	115-5	120-1	120-2	120-3	120-5	120-6	120-7	120-8	120-9	120-12	120-13	128-1	128-2	128-3	130-1
EVMSG90 1-1/5.5	/	/	1	2	4	1	1	1	1	1	1	2	1	1	4	2	4	/	4	/	/	4	1	4	4	4	4	3
EVMSG90 1-0/7.5	/	/	1	2	4	1	1	1	1	1	1	2	1	1	4	2	4	/	4	/	/	4	1	4	4	4	4	3
EVMSG90 2-2/11	/	/	1	2	4	1	2	1	1	1	1	2	1	1	4	2	4	/	4	/	/	4	1	4	4	4	4	3
EVMSG90 2-0/15	/	/	1	2	4	1	2	1	1	1	1	2	1	1	4	2	4	/	4	/	/	4	1	4	4	4	4	3
EVMSG90 3-2/18.5	/	/	1	2	4	2	3	1	1	1	1	2	1	1	4	2	4	/	4	/	/	4	1	4	4	4	4	3
EVMSG90 3-0/22	/	/	1	2	4	2	3	1	1	1	1	2	1	1	4	2	4	/	4	/	/	4	1	4	4	4	4	3
EVMSG90 4-2/30	/	/	1	2	4	3	4	1	1	1	1	2	1	1	4	2	4	/	4	/	/	4	1	4	4	4	4	3
EVMSG90 4-0/30	/	/	1	2	4	3	4	1	1	1	1	2	1	1	4	2	4	/	4	/	/	4	1	4	4	4	4	3
EVMSG90 5-2/37	1	1	1	2	4	4	5	1	1	1	1	2	1	1	4	2	4	4	2	3	4	4	1	4	4	4	4	3
EVMSG90 5-0/37	1	1	1	2	4	4	5	1	1	1	1	2	1	1	4	2	4	4	2	3	4	4	1	4	4	4	4	3
EVMSG90 6-2/45	1	1	1	2	4	5	6	1	1	1	1	2	1	1	4	2	4	4	2	3	4	4	1	8	4	4	8	3
EVMSG90 6-0/45	1	1	1	2	4	5	6	1	1	1	1	2	1	1	4	2	4	4	2	3	4	4	1	8	4	4	8	3

Pump Type	N°																				
	130-2	130-4	131-1	135-1	135-2	135-3	135-4	135-5	137-1	137-2	140	140-1	140-2	150	162	212	212-1	212-2	212-3	245	273-1	274-2
EVMSG90 1-1/5.5	4	/	1	4	2	/	/	1	1	1	2	/	/	/	1	1	4	1	1	2	4	/
EVMSG90 1-0/7.5	4	/	1	4	2	/	/	1	1	1	2	/	/	/	1	1	4	1	1	2	4	/
EVMSG90 2-2/11	4	/	1	4	2	/	/	1	1	1	2	/	/	/	1	1	4	1	1	2	4	/
EVMSG90 2-0/15	4	/	1	4	2	/	/	1	1	1	2	/	/	/	1	1	4	1	1	2	4	/
EVMSG90 3-2/18.5	4	/	1	4	2	/	/	1	1	1	2	/	/	/	1	1	4	1	1	2	4	/
EVMSG90 3-0/22	4	/	1	4	2	/	/	1	1	1	2	/	/	/	1	1	4	1	1	2	4	/
EVMSG90 4-2/30	4	/	1	4	2	/	/	1	1	1	2	/	/	/	1	1	4	1	1	2	4	/
EVMSG90 4-0/30	4	/	1	4	2	/	/	1	1	1	2	/	/	/	1	1	4	1	1	2	4	/
EVMSG90 5-2/37	4	1	1	4	2	4	3	1	1	1	/	1	1	1	1	1	4	1	1	2	4	1
EVMSG90 5-0/37	4	1	1	4	2	4	3	1	1	1	/	1	1	1	1	1	4	1	1	2	4	1
EVMSG90 6-2/45	4	1	1	4	2	4	3	1	1	1	/	1	1	1	1	1	4	1	1	2	4	1
EVMSG90 6-0/45	4	1	1	4	2	4	3	1	1	1	/	1	1	1	1	1	4	1	1	2	4	1

EBARA Pumps Europe S.p.A. reserves the right to make changes without prior notice.

BEARINGS
EVMSG90

Pump Type	N° 56
EVMSG90 1-1/5.5	/
EVMSG90 1-0/7.5	/
EVMSG90 2-2/11	/
EVMSG90 2-0/15	/
EVMSG90 3-2/18.5	/
EVMSG90 3-0/22	/
EVMSG90 4-2/30	/
EVMSG90 4-0/30	/
EVMSG90 5-2/37	6315 ZZ C3
EVMSG90 5-0/37	6315 ZZ C3
EVMSG90 6-2/45	6315 ZZ C3
EVMSG90 6-0/45	6315 ZZ C3

EBARA Pumps Europe S.p.A. reserves the right to make changes without prior notice.

PACKING DRAWING
EVMS(.)1-3-5-10-15-20-32-45-64-90

TYPE 1

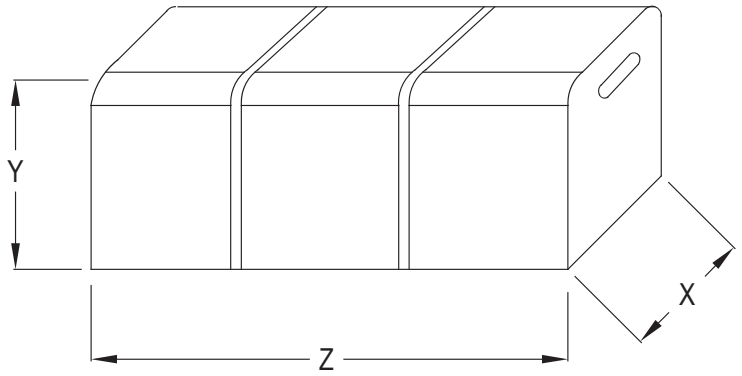

TYPE 2

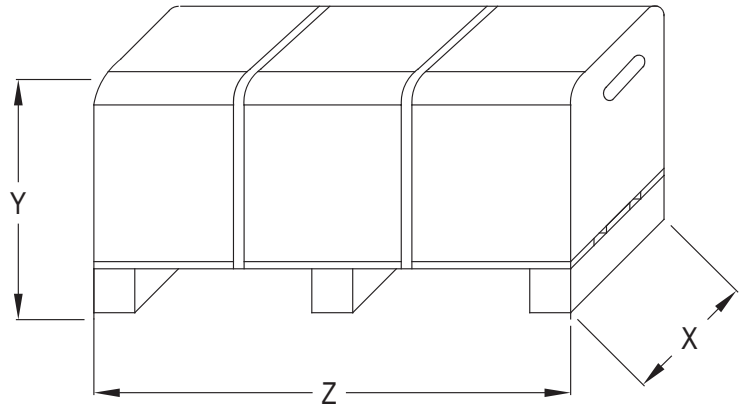

TYPE 3

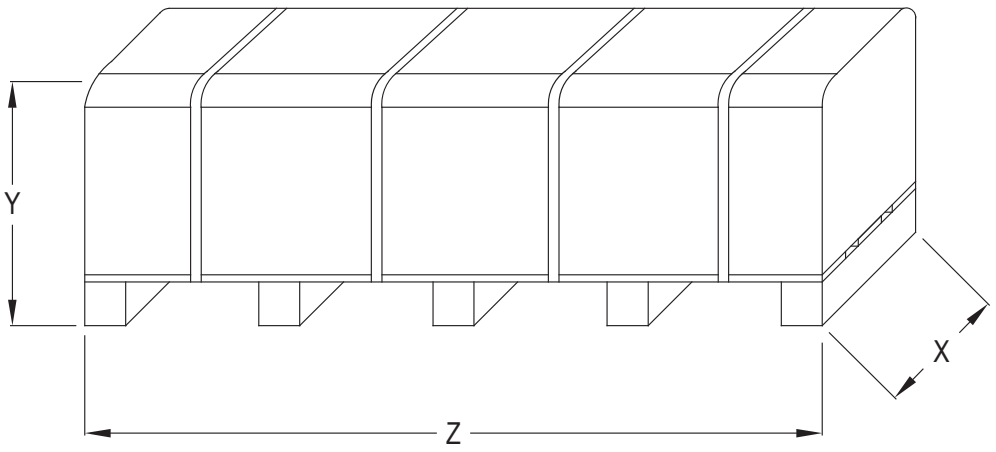

EBARA Pumps Europe S.p.A. reserves the right to make changes without prior notice.

PACKING DRAWING
EVMS(.)1-3-5-10-15-20-32-45-64-90

TYPE 4

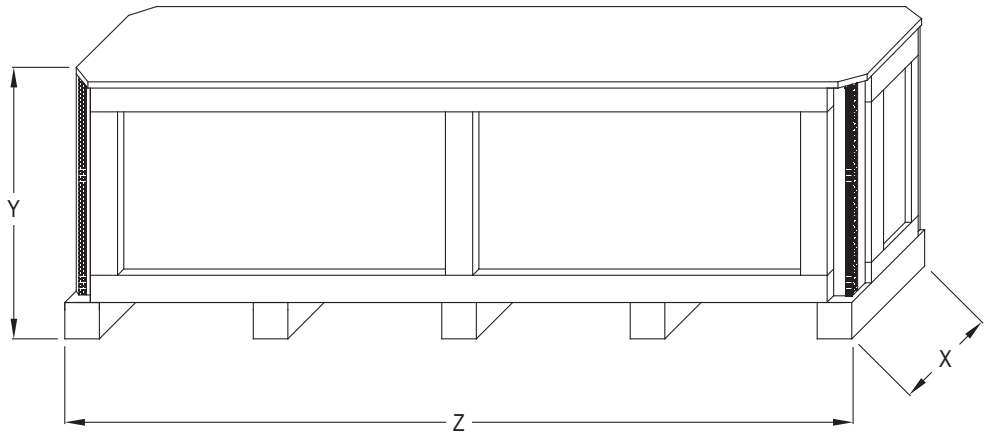

TYPE 5

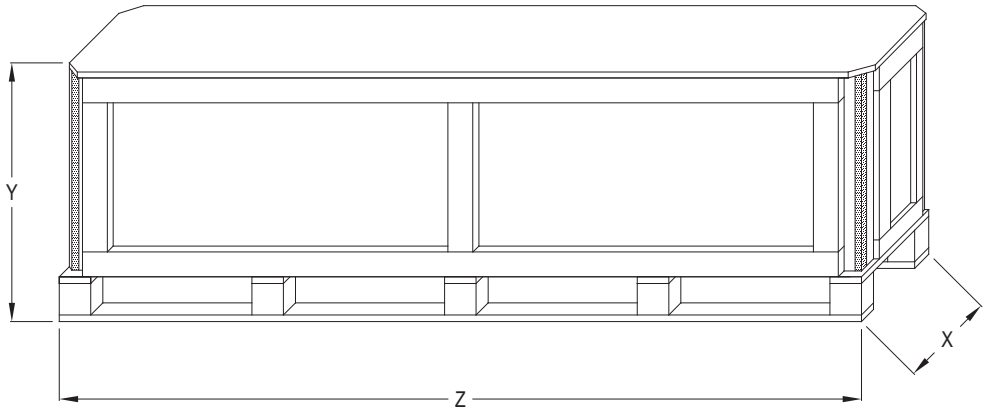

EBARA Pumps Europe S.p.A. reserves the right to make changes without prior notice.

PACKING DATA
EVMS(.)1-3-5

	Pump type	Pumps							Pumps with motor ~1							Pumps with motor ~3						
		Packing [mm]			Weight [kg] + Pack Type				Packing [mm]			Weight [kg] + Pack Type				Packing [mm]			Weight [kg] + Pack Type			
		X	Y	Z	EVMS(L)		EVMSG		X	Y	Z	EVMS(L)		EVMSG		X	Y	Z	EVMS(L)		EVMSG	
1	EVMS(.)1 2/0.37	385	400	385	12.3	1	19.3	1	385	400	585	19.6	1	26.6	1	385	400	585	19.6	1	26.6	1
	EVMS(.)1 3/0.37	385	400	385	12.8	1	19.8	1	385	400	585	20.1	1	27.1	1	385	400	585	20.1	1	27.1	1
	EVMS(.)1 4/0.37	385	400	385	13.2	1	20.2	1	385	400	770	20.9	1	27.9	1	385	400	770	20.9	1	27.9	1
	EVMS(.)1 5/0.37	385	400	585	14.2	1	21.2	1	385	400	770	21.4	1	28.4	1	385	400	770	21.4	1	28.4	1
	EVMS(.)1 6/0.37	385	400	585	14.6	1	21.6	1	385	400	770	21.8	1	28.8	1	385	400	770	21.8	1	28.8	1
	EVMS(.)1 7/0.37	385	400	585	15.0	1	22.0	1	385	400	770	22.2	1	29.2	1	385	400	770	22.2	1	29.2	1
	EVMS(.)1 8/0.37	385	400	585	15.5	1	22.5	1	385	400	770	22.7	1	29.7	1	385	400	770	22.7	1	29.7	1
	EVMS(.)1 9/0.55	385	400	585	15.9	1	22.9	1	385	400	770	23.6	1	30.6	1	385	400	770	23.6	1	30.6	1
	EVMS(.)1 10/0.55	385	400	585	16.3	1	23.3	1	385	400	770	24.0	1	31.0	1	385	400	770	24.0	1	31.0	1
	EVMS(.)1 11/0.55	385	400	585	16.8	1	23.8	1	385	400	770	24.5	1	31.5	1	385	400	770	24.5	1	31.5	1
	EVMS(.)1 12/0.55	385	400	585	17.5	1	24.5	1	385	400	770	25.2	1	32.2	1	385	400	970	25.8	1	32.8	1
	EVMS(.)1 13/0.55	385	400	585	18.1	1	25.1	1	385	400	970	26.4	1	33.4	1	385	400	970	26.4	1	32.8	1
	EVMS(.)1 14/0.75	385	400	770	19.3	1	26.3	1	385	400	970	30.1	1	37.1	1	385	400	970	28.6	1	35.6	1
	EVMS(.)1 16/0.75	385	400	770	20.3	1	27.3	1	385	400	970	31.1	1	38.1	1	385	400	970	29.6	1	36.6	1
	EVMS(.)1 18/1.1	385	400	770	21.3	1	28.4	1	385	400	970	33.2	1	40.2	1	385	400	970	32.2	1	39.2	1
	EVMS(.)1 20/1.1	385	400	770	22.4	1	29.4	1	385	400	970	34.2	1	41.2	1	385	400	1170	33.8	1	40.7	1
	EVMS(.)1 22/1.1	385	400	770	23.6	1	30.6	1	385	400	1170	36.0	1	43.0	1	385	400	1170	35.0	1	41.9	1
	EVMS(.)1 24/1.1	385	400	970	25.0	1	32.0	1	385	400	1170	37.0	1	44.0	1	385	400	1170	36.0	1	42.9	1
	EVMS(.)1 26/1.1	385	400	970	26.0	1	33.0	1	385	400	1170	38.0	1	45.0	1	385	400	1170	37.0	1	43.9	1
	EVMS(.)1 27/1.5	385	400	970	26.4	1	33.4	1	385	400	1170	45.2	1	-	-	500	525	1350	60.8	3	67.7	3
									400	510	1200	-	-	57.1	2							
	EVMS(.)1 29/1.5	385	400	970	27.4	1	34.4	1	500	525	1350	59.6	3	66.5	3	500	525	1350	55.3	3	62.2	3
	EVMS(.)1 32/1.5	385	400	1170	29.3	1	36.2	1	500	525	1350	60.9	3	67.8	3	500	525	1350	56.6	3	63.5	3
	EVMS(.)1 34/1.5	385	400	1170	30.2	1	37.1	1	500	525	1350	61.8	3	68.7	3	500	525	1350	57.5	3	64.4	3
	EVMS(.)1 37/2.2	385	400	1170	31.6	1	38.5	1	500	525	1540	69.0	3	76.0	3	500	525	1540	64.5	3	71.5	3
	EVMS(.)1 39/2.2	385	400	1170	32.6	1	39.5	1	500	525	1540	70.0	3	77.0	3	500	525	1540	65.5	3	72.5	3
3	EVMS(.)3 2/0.37	385	400	385	12.4	1	17.6	1	385	400	585	19.7	1	24.9	1	385	400	585	19.7	1	24.9	1
	EVMS(.)3 3/0.37	385	400	385	12.8	1	18.0	1	385	400	585	20.1	1	25.3	1	385	400	585	20.1	1	25.3	1
	EVMS(.)3 4/0.37	385	400	385	13.2	1	18.5	1	385	400	770	20.9	1	26.2	1	385	400	770	20.9	1	26.2	1
	EVMS(.)3 5/0.55	385	400	585	14.2	1	19.4	1	385	400	770	21.9	1	27.1	1	385	400	770	21.9	1	27.1	1
	EVMS(.)3 6/0.55	385	400	585	14.6	1	19.8	1	385	400	770	22.3	1	27.5	1	385	400	770	22.3	1	27.5	1
	EVMS(.)3 7/0.75	385	400	585	15.5	1	20.7	1	385	400	770	26.2	1	31.4	1	385	400	770	24.7	1	29.9	1
	EVMS(.)3 8/0.75	385	400	585	16.0	1	21.2	1	385	400	770	26.7	1	31.9	1	385	400	770	25.2	1	30.4	1
	EVMS(.)3 9/1.1	385	400	585	16.4	1	21.6	1	385	400	770	28.1	1	33.3	1	385	400	770	27.1	1	32.3	1
	EVMS(.)3 10/1.1	385	400	585	16.9	1	22.1	1	385	400	770	28.6	1	33.8	1	385	400	770	27.6	1	32.8	1
	EVMS(.)3 11/1.1	385	400	585	17.3	1	22.5	1	385	400	970	29.6	1	34.8	1	385	400	970	28.6	1	33.8	1
	EVMS(.)3 12/1.1	385	400	585	17.8	1	23.0	1	385	400	970	30.1	1	35.3	1	385	400	970	29.1	1	34.3	1
	EVMS(.)3 13/1.5	385	400	770	19.0	1	24.2	1	385	400	970	37.6	1	42.8	1	385	400	970	33.3	1	38.5	1
	EVMS(.)3 14/1.5	385	400	770	19.4	1	24.6	1	385	400	970	38.0	1	43.2	1	385	400	970	33.7	1	38.9	1
	EVMS(.)3 15/1.5	385	400	770	19.9	1	25.1	1	385	400	970	38.5	1	43.7	1	385	400	970	34.2	1	39.4	1
	EVMS(.)3 16/1.5	385	400	770	20.9	1	26.1	1	385	400	970	39.6	1	44.7	1	385	400	970	35.2	1	40.4	1
	EVMS(.)3 17/2.2	385	400	770	21.4	1	26.6	1	385	400	970	41.7	1	46.9	1	385	400	970	37.2	1	42.4	1
	EVMS(.)3 19/2.2	385	400	770	22.4	1	27.6	1	385	400	1170	43.3	1	48.5	1	385	400	1170	38.8	1	44.0	1
	EVMS(.)3 21/2.2	385	400	770	23.3	1	28.5	1	385	400	1170	44.2	1	49.4	1	385	400	1170	39.7	1	44.9	1
	EVMS(.)3 23/2.2	385	400	970	24.7	1	29.9	1	385	400	1170	45.2	1	50.4	1	385	400	1170	40.7	1	45.9	1
	EVMS(.)3 24/2.2	385	400	970	25.1	1	30.4	1	385	400	1170	45.6	1	50.8	1	385	400	1170	41.1	1	46.3	1
	EVMS(.)3 25/3.0	385	400	970	25.7	1	30.9	1	-	-	-	-	-	-	-	385	400	1170	48.7	1	-	-
																500	525	1350	-	-	56.4	3
	EVMS(.)3 27/3.0	385	400	970	26.7	1	31.9	1	-	-	-	-	-	-	-	500	525	1350	63.1	3	68.3	3
	EVMS(.)3 29/3.0	385	400	970	27.6	1	32.9	1	-	-	-	-	-	-	-	500	525	1350	64.0	3	69.3	3
	EVMS(.)3 31/3.0	385	400	1170	29.2	1	34.4	1	-	-	-	-	-	-	-	500	525	1350	65.0	3	70.2	3
	EVMS(.)3 33/3.0	385	400	1170	30.0	1	35.2	1	-	-	-	-	-	-	-	500	525	1540	70.0	3	75.2	3
5	EVMS(.)5 2/0.37	385	400	385	12.9	1	19.4	1	385	400	585	20.2	1	26.7	1	385	400	585	20.2	1	26.7	1
	EVMS(.)5 3/0.55	385	400	385	13.4	1	19.9	1	385	400	770	21.6	1	28.1	1	385	400	770	21.6	1	28.1	1
	EVMS(.)5 4/0.75	385	400	585	14.9	1	21.4	1	385	400	770	25.6	1	32.1	1	385	400	770	24.1	1	30.6	1
	EVMS(.)5 5/1.1	385	400	585	15.5	1	21.9	1	385	400	770	27.9	1	34.4	1	385	400	770	26.1	1	32.6	1
	EVMS(.)5 6/1.5	385	400	585	16.1	1	22.5	1	385	400	770	34.6	1	41.0	1	385	400	970	30.9	1	37.3	1
	EVMS(.)5 7/1.5	385	400	585	16.5	1	22.9	1	385	400	970	35.6	1	42.0	1	385	400	970	31.3	1	37.7	1
	EVMS(.)5 8/2.2	385	400	585	17.0	1	23.5	1	385	400	970	37.8	1	44.3	1	385	400	970	33.3	1	39.8	1
	EVMS(.)5 9/2.2	385	400	585	17.6	1	24.0	1	385	400	970	38.4	1	44.8	1	385	400	970	33.9	1	40.3	1
	EVMS(.)5 10/2.2	385	400	770	18.5	1	25.0	1	385	400	970	38.8	1	45.3	1	385	400	970	34.3	1	40.8	1
	EVMS(.)5 11/2.2	385	400	770	19.4	1	25.8	1	385	400	970	39.7	1	46.1	1	385	400	970	35.2	1	41.6	1
	EVMS(.)5 12/3.0	385	400	770	20.6	1	27.0	1	-	-	-	-	-	-	-	385	400	1170	44.0	1	50.4	1
	EVMS(.)5 13/3.0	385	400	770	21.2	1	27.6	1	-	-	-	-	-	-	-	385	400	1170	44.6	1	-	-
																400	510	1200	-	-	56.0	2
	EVMS(.)5 14/3.0	385	400	770	21.7	1	28.2	1	-	-	-	-	-	-	-	385	400	1170	45.1	1	-	-
																400	510	1200	-	-	56.6	2
	EVMS(.)5 15/3.0	385	400	770	22.8	1	29.2	1	-	-	-	-	-	-	-	385	400	1170	46.2	1	-	-
																400	510	1200	-	-	57.6	2
	EVMS(.)5 17/4.0	385	400	970	23.9	1	30.3	1	-	-	-	-	-	-	-	400	510	1200	58.4	2	64.8	2
	EVMS(.)5 19/4.0	385	400	970	25.0	1	31.4	1	-	-	-	-	-	-	-	500	525	1350	67.9	3	74.3	3
	EVMS(.)5 20/4.0	385	400	970	27.2	1	33.6	1	-	-	-	-	-	-	-	500	525	1350	70.1	3	76.5	3
	EVMS(.)5 23/5.5	385	400	1170	34.5	1	40.9	1	-	-	-	-	-	-	-	500	525	1540	91.4	3	97.8	3
	EVMS(.)5 25/5.5	385	400	1170	35.5	1	41.9	1	-	-	-	-	-	-	-	500	525	1540	92.4	3	98.8	3
	EVMS(.)5 27/5.5	500	525	1350	50.8	3	57.3	3	-	-	-	-	-	-	-	610	525	1750	92.5	3	99.0	3

EBARA Pumps Europe S.p.A. reserves the right to make changes without prior notice.

PACKING DATA
EVMS(.)10-15-20

	Pump type	Pumps							Pumps with motor ~1							Pumps with motor ~3						
		Packing [mm]			Weight [kg] + Pack Type				Packing [mm]			Weight [kg] + Pack Type				Packing [mm]			Weight [kg] + Pack Type			
		X	Y	Z	EVMS(L)		EVMSG		X	Y	Z	EVMS(L)		EVMSG		X	Y	Z	EVMS(L)		EVMSG	
10	EVMS(.)10 2/0.75	385	400	585	19.9	1	26.7	1	385	400	770	30.6	1	37.4	1	385	400	770	29.1	1	35.9	1
	EVMS(.)10 3/1.5	385	400	585	20.9	1	27.7	1	385	400	770	39.4	1	46.2	1	385	400	770	35.1	1	41.9	1
	EVMS(.)10 4/2.2	385	400	585	21.7	1	28.4	1	385	400	770	41.9	1	48.6	1	385	400	770	37.4	1	44.1	1
	EVMS(.)10 5/2.2	385	400	585	22.5	1	29.3	1	385	400	970	43.3	1	50.1	1	385	400	970	38.8	1	45.6	1
	EVMS(.)10 6/2.2	385	400	585	23.4	1	30.1	1	385	400	970	44.2	1	50.9	1	385	400	970	39.7	1	46.4	1
	EVMS(.)10 7/3.0	385	400	585	24.3	1	31.1	1	-	-	-	-	-	-	-	385	400	970	48.2	1	-	-
																400	510	1200	-	-	60.0	2
	EVMS(.)10 8/3.0	385	400	770	25.7	1	32.4	1	-	-	-	-	-	-	-	385	400	970	49.1	1	-	-
																400	510	1200	-	-	60.8	2
	EVMS(.)10 9/4.0	385	400	770	26.5	1	33.3	1	-	-	-	-	-	-	-	400	510	1200	61.4	2	68.2	2
	EVMS(.)10 10/4.0	385	400	770	27.4	1	34.1	1	-	-	-	-	-	-	-	400	510	1200	62.3	2	69.0	2
	EVMS(.)10 11/4.0	385	400	770	29.0	1	35.8	1	-	-	-	-	-	-	-	400	510	1200	63.9	2	70.7	2
	EVMS(.)10 12/5.5	385	400	970	39.2	1	46.0	1	-	-	-	-	-	-	-	500	525	1350	92.6	3	99.4	3
	EVMS(.)10 14/5.5	385	400	970	41.0	1	47.8	1	-	-	-	-	-	-	-	500	525	1350	94.4	3	101.2	3
	EVMS(.)10 15/5.5	385	400	970	41.9	1	48.7	1	-	-	-	-	-	-	-	500	525	1350	95.3	3	102.1	3
	EVMS(.)10 16/7.5	385	400	970	42.9	1	49.6	1	-	-	-	-	-	-	-	500	525	1540	107.5	3	114.2	3
	EVMS(.)10 18/7.5	385	400	970	45.3	1	-	-	-	-	-	-	-	-	-	500	525	1540	109.3	3	115.6	3
		400	510	1200	-	-	56.6	2														
	EVMS(.)10 19/7.5	385	400	970	46.2	1	-	-	-	-	-	-	-	-	-	500	525	1540	110.2	3	117.0	3
		400	510	1200	-	-	58.0	2														
	EVMS(.)10 21/7.5	385	400	970	48.0	1	-	-	-	-	-	-	-	-	-	500	525	1540	112.0	3	118.8	3
		400	510	1200	-	-	59.8	2														
	EVMS(.)10 22/11	400	510	1200	55.3	2	62.1	2	-	-	-	-	-	-	-	610	525	1750	131.9	3	138.7	3
	EVMS(.)10 23/11	500	525	1350	70.8	3	77.6	3	-	-	-	-	-	-	-	610	525	1750	138.6	3	145.4	3
15	EVMS(.)15 1/1.1	385	400	585	21.2	1	29.3	1	385	400	770	32.9	1	41.0	1	385	400	770	31.9	1	40.0	1
	EVMS(.)15 2/2.2	385	400	585	21.5	1	29.6	1	385	400	770	41.7	1	49.8	1	385	400	770	37.2	1	45.3	1
	EVMS(.)15 3/3.0	385	400	585	22.8	1	30.9	1	-	-	-	-	-	-	-	385	400	970	46.7	1	-	-
																400	510	1200	-	-	59.8	2
	EVMS(.)15 4/4.0	385	400	585	24.0	1	32.1	1	-	-	-	-	-	-	-	400	510	1200	59.4	2	67.5	2
	EVMS(.)15 5/5.5	385	400	770	34.2	1	42.4	1	-	-	-	-	-	-	-	400	510	1200	79.6	2	87.8	2
	EVMS(.)15 6/5.5	385	400	770	35.4	1	43.6	1	-	-	-	-	-	-	-	400	510	1200	80.8	2	89.0	2
	EVMS(.)15 7/7.5	385	400	770	37.6	1	45.8	1	-	-	-	-	-	-	-	500	525	1350	98.4	3	106.6	3
	EVMS(.)15 8/7.5	385	400	970	39.4	1	47.5	1	-	-	-	-	-	-	-	500	525	1350	99.7	3	107.9	3
	EVMS(.)15 9/11	385	400	970	41.2	1	-	-	-	-	-	-	-	-	-	500	525	1350	117.5	3	125.7	3
		400	510	1200	-	-	54.4	2														
	EVMS(.)15 10/11	385	400	970	42.5	1	-	-	-	-	-	-	-	-	-	500	525	1540	123.0	3	131.2	3
		400	510	1200	-	-	55.7	2														
	EVMS(.)15 11/11	385	400	970	50.5	1	-	-	-	-	-	-	-	-	-	500	525	1540	131.0	3	139.1	3
		400	510	1200	-	-	63.6	2														
	EVMS(.)15 12/11	400	510	1200	56.8	2	64.9	2	-	-	-	-	-	-	-	500	525	1540	132.3	3	140.4	3
	EVMS(.)15 13/11	400	510	1200	58.1	2	66.2	2	-	-	-	-	-	-	-	500	525	1540	133.6	3	141.7	3
	EVMS(.)15 15/15	400	510	1200	60.7	2	68.8	2	-	-	-	-	-	-	-	610	525	1750	175.8	3	183.9	3
	EVMS(.)15 17/15	500	525	1350	72.4	3	80.5	3	-	-	-	-	-	-	-	610	525	1750	178.7	3	186.8	3
20	EVMS(.)20 1/1.5	385	400	585	22.4	1	29.6	1	385	400	770	40.9	1	48.1	1	385	400	770	36.6	1	43.8	1
	EVMS(.)20 2/3.0	385	400	585	21.5	1	29.7	1	-	-	-	-	-	-	-	385	400	770	45.4	1	-	-
																400	510	1200	-	-	58.6	2
	EVMS(.)20 3/4.0	385	400	585	22.9	1	31.1	1	-	-	-	-	-	-	-	400	510	1200	58.3	2	66.5	2
	EVMS(.)20 4/5.5	385	400	770	29.3	1	37.5	1	-	-	-	-	-	-	-	400	510	1200	74.7	2	82.9	2
	EVMS(.)20 5/7.5	385	400	770	30.6	1	38.8	1	-	-	-	-	-	-	-	400	510	1200	83.0	2	91.2	2
	EVMS(.)20 6/7.5	385	400	770	31.8	1	40.0	1	-	-	-	-	-	-	-	400	510	1200	84.2	2	92.4	2
	EVMS(.)20 7/11	385	400	970	34.5	1	42.7	1	-	-	-	-	-	-	-	500	525	1350	111.4	3	119.6	3
	EVMS(.)20 8/11	385	400	970	46.3	1	-	-	-	-	-	-	-	-	-	500	525	1350	123.2	3	131.4	3
		400	510	1200	-	-	60.1	2														
	EVMS(.)20 9/11	385	400	970	47.6	1	-	-	-	-	-	-	-	-	-	500	525	1350	124.5	3	132.7	3
		400	510	1200	-	-	61.4	2														
	EVMS(.)20 10/11	385	400	970	49.0	1	-	-	-	-	-	-	-	-	-	500	525	1540	130.0	3	138.2	3
		400	510	1200	-	-	62.8	2														
	EVMS(.)20 11/15	385	400	970	50.3	1	-	-	-	-	-	-	-	-	-	500	525	1540	169.8	3	178.0	3
		400	510	1200	-	-	64.1	2														
	EVMS(.)20 12/15	400	510	1200	57.2	2	65.4	2	-	-	-	-	-	-	-	500	525	1540	171.1	3	179.3	3
	EVMS(.)20 13/15	400	510	1200	58.5	2	66.8	2	-	-	-	-	-	-	-	500	525	1540	172.4	3	180.7	3
	EVMS(.)20 14/18.5	400	510	1200	59.9	2	68.1	2	-	-	-	-	-	-	-	610	525	1750	183.0	3	191.2	3
	EVMS(.)20 15/18.5	400	510	1200	61.2	2	69.4	2	-	-	-	-	-	-	-	610	525	1750	184.3	3	192.5	3
	EVMS(.)20 16/18.5	400	510	1200	62.5	2	70.7	2	-	-	-	-	-	-	-	610	525	1750	185.6	3	193.8	3

EBARA Pumps Europe S.p.A. reserves the right to make changes without prior notice.

PACKING DATA
EVMS(.)32-45

	Pump type	Pumps							Pumps with motor ~3						
		Packing [mm]			Weight [kg] + Pack Type				Packing [mm]			Weight [kg] + Pack Type			
		X	Y	Z	EVMS(L)		EVMSG		X	Y	Z	EVMS(L)		EVMSG	
32	EVMS(.)32 1-1/1.5	420	512	800	55.1	2	51.8	2	500	612	1000	71.3	2	68.0	2
	EVMS(.)32 1-0/2.2	420	512	800	55.1	2	51.8	2	500	612	1000	72.8	2	69.5	2
	EVMS(.)32 2-2/3.0	420	512	800	58.4	2	55.1	2	500	612	1000	83.1	2	79.8	2
	EVMS(.)32 2-0/4.0	420	512	800	58.4	2	55.1	2	500	612	1000	89.6	2	86.3	2
	EVMS(.)32 3-2/5.5	420	512	800	72.3	2	68.9	2	500	612	1200	115.7	2	112.3	2
	EVMS(.)32 3-0/5.5	420	512	800	72.3	2	68.9	2	500	612	1200	115.7	2	112.3	2
	EVMS(.)32 4-2/7.5	500	612	1000	78.2	2	74.9	2	500	612	1350	136.8	3	133.5	3
	EVMS(.)32 4-0/7.5	500	612	1000	78.2	2	74.9	2	500	612	1350	136.8	3	133.5	3
	EVMS(.)32 5-2/11	500	612	1000	88.2	2	84.9	2	500	617	1540	162.7	3	159.4	3
	EVMS(.)32 5-0/11	500	612	1000	88.2	2	84.9	2	500	617	1540	162.7	3	159.4	3
	EVMS(.)32 6-2/11	500	612	1200	93.2	2	89.9	2	500	617	1540	166.0	3	162.7	3
	EVMS(.)32 6-0/11	500	612	1200	93.2	2	89.9	2	500	617	1540	166.0	3	162.7	3
	EVMS(.)32 7-2/15	500	612	1200	96.5	2	93.1	2	610	617	1750	209.6	3	206.2	3
	EVMS(.)32 7-0/15	500	612	1200	96.5	2	93.1	2	610	617	1750	209.6	3	206.2	3
	EVMS(.)32 8-2/15	500	612	1200	101.3	2	98.0	2	610	617	1750	214.4	3	211.1	3
	EVMS(.)32 8-0/15	500	612	1200	101.3	2	98.0	2	610	617	1750	214.4	3	211.1	3
	EVMS(.)32 9-2/15	500	612	1350	115.7	3	112.4	3	610	617	1750	217.9	3	214.6	3
	EVMS(.)32 9-1/15	500	612	1350	115.7	3	112.4	3	610	617	1750	217.9	3	214.6	3
	EVMS(.)32 10-2/18.5	500	612	1350	119.1	3	115.8	3	720	715	1970	274.3	4	271.0	4
	EVMS(.)32 10-0/18.5	500	612	1350	119.1	3	115.8	3	720	715	1970	274.3	4	271.0	4
	EVMS(.)32 11-2/18.5	500	617	1540	122.0	3	118.7	3	720	715	1970	277.8	4	274.5	4
	EVMS(.)32 11-1/18.5	500	617	1540	122.0	3	118.7	3	720	715	1970	277.8	4	274.5	4
	EVMS(.)32 12-2/22	500	617	1540	128.0	3	124.7	3	720	715	2170	315.8	4	312.5	4
	EVMS(.)32 12-0/22	500	617	1540	128.0	3	124.7	3	720	715	2170	315.8	4	312.5	4
	EVMS(.)32 13-2/22	500	617	1540	131.8	3	128.4	3	720	715	2170	319.6	4	316.2	4
	EVMS(.)32 13-0/22	500	617	1540	131.8	3	128.4	3	720	715	2170	319.6	4	316.2	4
	EVMS(.)32 14-2/30	610	617	1750	142.5	3	139.2	3	800	750	2420	371.5	5	368.2	5
	EVMS(.)32 14-0/30	610	617	1750	142.5	3	139.2	3	800	750	2420	371.5	5	368.2	5
45	EVMS(.)45 1-1/3.0	420	512	800	68.9	2	66.7	2	500	612	1000	93.6	2	91.4	2
	EVMS(.)45 1-0/4.0	420	512	800	68.9	2	66.7	2	500	612	1000	100.1	2	97.9	2
	EVMS(.)45 2-2/5.5	420	512	800	84.2	2	82.1	2	500	612	1200	127.6	2	125.5	2
	EVMS(.)45 2-0/7.5	420	512	800	84.2	2	82.1	2	500	612	1350	134.6	2	132.5	2
	EVMS(.)45 3-2/11	500	612	1000	99.1	2	96.9	2	500	612	1350	174.2	3	172.0	3
	EVMS(.)45 3-0/11	500	612	1000	99.1	2	96.9	2	500	612	1350	174.2	3	172.0	3
	EVMS(.)45 4-2/15	500	612	1000	105.6	2	103.5	2	500	617	1540	218.6	3	216.5	3
	EVMS(.)45 4-0/15	500	612	1000	105.6	2	103.5	2	500	617	1540	218.6	3	216.5	3
	EVMS(.)45 5-2/18.5	500	612	1200	112.6	2	110.4	2	500	617	1540	231.9	3	229.7	3
	EVMS(.)45 5-0/18.5	500	612	1200	112.6	2	110.5	2	500	617	1540	231.9	3	229.8	3
	EVMS(.)45 6-2/22	500	612	1200	118.0	2	115.9	2	610	617	1750	265.1	3	263.0	3
	EVMS(.)45 6-0/22	500	612	1200	118.0	2	115.9	2	610	617	1750	265.1	3	263.0	3
	EVMS(.)45 7-2/30	500	612	1200	128.6	2	126.5	2	610	617	1750	308.7	3	306.6	3
	EVMS(.)45 7-0/30	500	612	1200	128.6	2	126.5	2	610	617	1750	308.7	3	306.6	3
	EVMS(.)45 8-2/30	500	612	1350	144.8	3	142.7	3	720	715	1970	359.0	4	356.9	4
	EVMS(.)45 8-0/30	500	612	1350	144.8	3	142.7	3	720	715	1970	359.0	4	356.9	4
	EVMS(.)45 9-2/30	500	612	1350	150.3	3	148.2	3	720	715	1970	364.5	4	362.4	4
	EVMS(.)45 9-0/37	500	612	1350	161.8	3	159.6	3	720	715	2170	474.0	4	471.8	4
	EVMS(.)45 10-2/37	500	617	1540	166.4	3	164.3	3	720	715	2170	479.2	4	477.1	4
	EVMS(.)45 10-0/37	500	617	1540	166.4	3	164.3	3	720	715	2170	479.2	4	477.1	4
	EVMS(.)45 11-2/45	500	617	1540	177.3	3	175.1	3	800	750	2420	614.1	5	611.9	5
	EVMS(.)45 11-0/45	500	617	1540	177.3	3	175.1	3	800	750	2420	614.1	5	611.9	5
	EVMS(.)45 12-2/45	500	617	1540	182.6	3	180.4	3	800	750	2420	619.4	5	617.2	5
	EVMS(.)45 12-0/45	500	617	1540	182.6	3	180.4	3	800	750	2420	619.4	5	617.2	5
	EVMS(.)45 13-2/45	610	617	1750	189.7	3	187.5	3	800	750	2420	624.7	5	622.5	5

EBARA Pumps Europe S.p.A. reserves the right to make changes without prior notice.

PACKING DATA
EVMS(.)64-90

	Pump type	Pumps							Pumps with motor ~3						
		Packing [mm]			Weight [kg] + Pack Type				Packing [mm]			Weight [kg] + Pack Type			
		X	Y	Z	EVMS(L)		EVMSG		X	Y	Z	EVMS(L)		EVMSG	
64	EVMS(.)64 1-1/4.0	420	512	800	74.3	2	71.3	2	500	612	1000	105.5	2	102.5	2
	EVMS(.)64 1-0/5.5	420	512	800	84.1	2	81.1	2	500	612	1200	127.5	2	124.5	2
	EVMS(.)64 2-2/7.5	420	612	1000	91.9	2	88.9	2	500	612	1350	150.5	3	147.5	3
	EVMS(.)64 2-1/11	500	612	1000	99.2	2	96.2	2	500	612	1350	174.3	3	171.3	3
	EVMS(.)64 2-0/15	500	612	1000	99.2	2	96.2	2	500	612	1350	212.8	3	209.8	3
	EVMS(.)64 3-2/15	500	612	1000	104.3	2	101.3	2	500	617	1540	217.3	3	214.3	3
	EVMS(.)64 3-1/15	500	612	1000	104.3	2	101.3	2	500	617	1540	217.3	3	214.3	3
	EVMS(.)64 3-0/18.5	500	612	1000	104.3	2	101.3	2	500	617	1540	225.3	3	222.3	3
	EVMS(.)64 4-2/18.5	500	612	1000	109.4	2	106.4	2	500	617	1540	230.4	3	227.4	3
	EVMS(.)64 4-1/22	500	612	1000	109.6	2	106.6	2	500	617	1540	256.6	3	253.6	3
	EVMS(.)64 4-0/22	500	612	1000	109.6	2	106.6	2	500	617	1540	256.6	3	253.6	3
	EVMS(.)64 4-0/30	500	612	1000	109.6	2	106.6	2	500	617	1540	289.6	3	286.6	3
	EVMS(.)64 5-2/30	500	612	1200	121.8	2	118.8	2	610	617	1750	301.9	3	298.9	3
	EVMS(.)64 5-1/30	500	612	1200	121.8	2	118.8	2	610	617	1750	301.9	3	298.9	3
	EVMS(.)64 5-0/30	500	612	1200	121.8	2	118.8	2	610	617	1750	301.9	3	298.9	3
	EVMS(.)64 6-2/30	500	612	1200	132.1	2	130.4	2	610	617	1750	312.2	3	310.5	3
	EVMS(.)64 6-1/37	500	612	1200	144.1	2	142.5	2	720	715	1970	461.2	4	459.6	4
	EVMS(.)64 6-0/37	500	612	1200	144.1	2	142.5	2	720	715	1970	461.2	4	459.6	4
	EVMS(.)64 7-2/37	500	612	1200	149.5	2	147.8	2	720	715	1970	466.6	4	464.9	4
	EVMS(.)64 7-1/37	500	612	1200	149.5	2	147.8	2	720	715	1970	466.6	4	464.9	4
	EVMS(.)64 7-1/45	500	612	1200	149.5	2	147.8	2	720	715	2170	586.6	4	584.9	4
	EVMS(.)64 7-0/45	500	612	1200	155.1	2	153.4	2	720	715	2170	592.2	4	590.5	4
	EVMS(.)64 8-2/45	500	612	1350	171.7	3	170.1	3	720	715	2170	597.9	4	596.3	4
	EVMS(.)64 8-1/45	500	612	1350	171.2	3	169.6	3	720	715	2170	597.4	4	595.8	4
90	EVMS(.)90 1-1/5.5	420	512	800	84.4	2	81.4	2	500	612	1350	138.7	3	135.7	3
	EVMS(.)90 1-0/7.5	420	512	800	84.4	2	81.4	2	500	612	1350	145.7	3	142.7	3
	EVMS(.)90 2-2/11	500	612	1000	99.4	2	96.4	2	500	612	1350	174.5	3	171.5	3
	EVMS(.)90 2-0/15	500	612	1000	99.4	2	96.4	2	500	612	1350	213.0	3	210.0	3
	EVMS(.)90 3-2/18.5	500	612	1000	105.0	2	102.0	2	500	617	1540	226.0	3	223.0	3
	EVMS(.)90 3-0/22	500	612	1000	104.8	2	101.8	2	500	617	1540	251.8	3	248.8	3
	EVMS(.)90 4-2/30	500	612	1200	117.0	2	114.0	2	610	617	1750	297.1	3	294.1	3
	EVMS(.)90 4-0/30	500	612	1200	117.1	2	114.0	2	610	617	1750	297.2	3	294.1	3
	EVMS(.)90 5-2/37	500	612	1200	140.7	2	137.7	2	720	715	1970	457.8	4	454.8	4
	EVMS(.)90 5-0/37	500	612	1200	139.5	2	137.9	2	720	715	1970	456.6	4	455.0	4
	EVMS(.)90 6-2/45	500	612	1350	161.5	3	159.8	3	720	715	2170	587.7	4	586.0	4
	EVMS(.)90 6-0/45	500	612	1350	161.5	3	159.8	3	720	715	2170	587.7	4	586.0	4

EBARA Pumps Europe S.p.A. reserves the right to make changes without prior notice.

GENERAL

Various regulatory authorities in many countries have introduced or are planning legislation to encourage the manufacture and use of higher efficiency motors, as part of a concerted effort worldwide to reduce energy consumption. Indeed, the International Electrotechnical Commission (IEC) has introduced a new standards relating to energy efficient motors. **IEC 60034-30** defines new efficiency classes for motors and harmonizes the currently different requirements for induction motor efficiency levels around the world.
The **Commission Regulation (EC) N. 640/2009** implementing EcoDesign Directive 2009/125/EC states that in the European Community, with the exception of some special applications, motors shall not be less efficient than the IE3 efficiency level as from 1 January 2015.

In detail:
IE3 by January 1, 2015 (for motors from 7.5 kW to 375 kW).
IE3 for all motors by January 1, 2017 (for motors from 0.75 kW to 375 kW).

		MOTOR	
Power Source	Frequency	50 Hz	
	Phase	Single Phase	Three Phase
	Power rating	0.37 ÷ 2.2 kW / 0.5 ÷ 3.0 HP	0.37 ÷ 45 kW / 0.5 ÷ 60 HP
	Voltage	230 ± 10% V	230/400 ± 10% V (up to 4.0 kW) 400/690 ± 10% V (above 5.5 kW)
Type	Type	IC411 - TEFC	
	Efficiency Level	from 0.37 kW up to 2.2 kW	- : from 0.37 kW up to 0.55 kW IE3 : above 0.75 kW
	No° of poles	2	
	Protection degree	IP55 : up to 11 kW IP56 : above 15 kW	
	Insulation Class	F (temperature rise class B)	
Others	Thermal Protection	-	PTC sensor pre-installed for motors of 1.5 kW and above
	Casing Material	Aluminium	Aluminium : up to 30 KW Cast Iron : above 37 KW
	Flange mount (IEC motor)	IM B14 : up to 4.0 kW IM B5 : above 5.5 kW	
	Terminal Box fixing	-	Unlosable screw and sealing from 0.75 kW to 45 kW

NOISE DATA

Motor Size	Power [kW]	Power [HP]	Noise LpA - dB(A) *
71	0.37	0.5	52
	0.55	0.75	
80	0.75	1	52
	1.1	1.5	
90	1.5	2	60
	2.2	3	
100	3.0	4	62
112	4.0	5.5	66
132	5.5	7.5	68
	7.5	10	
160	11	15	73
	15	20	72
	18.5	25	70
180	22	30	70
200	30	40	70
	37	50	73
225	45	60	75

* Noise values were measured with a tolerance of ± 2.5 dB (A).

EBARA Pumps Europe S.p.A. reserves the right to make changes without prior notice.

TECHNICAL MOTOR DATA
EVMS 1-3-5-10-15-20-32-45-64-90

Single Phase Motor at 50Hz, 2 poles

(only for EVMS(.)1-3-5-10-15-20)

Size	Power [kW]	Power [HP]	Capacitor [µF]	Capacitor [V]	Load efficency and power-factor η % 100%	Load efficency and power-factor cos−φ 100%	Full load current [A] 230 V	Locked rotor current [A] 230 V
71	0.37	0.5	16	400	69.1	0.1	2.4	8.9
	0.55	0.75	16	400	61.4	0.1	4.2	14.7
80	0.75	1	20	400	69.4	0.9	5.0	20.0
	1.1	1.5	30	400	75.1	0.1	6.7	28.1
90 S •	1.5	2	35	400	79.0	0.97	8.8	46.0
90 L •	2.2	3	40	400	78.0	0.97	12.9	61.0

• Single phase motors manufactured by EBARA

Three Phase Motor at 50Hz, 2 poles

Size	Power [kW]	Power [HP]	Efficiency	Load efficency and power-factor (400V) η % 50%	η % 75%	η % 100%	cos−φ 100%	Full load current [A] 230 V	400V	690V	Locked rotor current [A] 230 V	400V	690V
71	0.37	0.5	-	60.0	66.9	67.0	0.8	1.7	1.0	-	8.3	4.8	-
71	0.55	0.75	-	74.0	77.2	78.0	0.8	2.4	1.4	-	13.0	7.5	-
80 ♦	0.75	1	IE3	80.2	82.5	82.1	0.8	3.0	1.7	-	19.7	11.4	-
	1.1	1.5	IE3	81.3	82.8	82.7	0.8	4.3	2.5	-	28.8	16.6	-
90 ♦	1.5	2	IE3	83.5	84.3	84.6	0.8	5.8	3.3	-	44.1	25.5	-
	2.2	3	IE3	85.7	86.8	86	0.8	8.2	4.7	-	63.3	36.6	-
100 ♦	3.0	4	IE3	85.9	87.5	87.1	0.8	11.1	6.4	-	89.8	51.8	-
112 ♦	4.0	5.5	IE3	86	88.3	88.1	0.8	15.1	8.7	-	131.8	76.1	-
132 ♦	5.5	7.5	IE3	88.9	90.3	90	0.9	-	10.4	6.0	-	115.3	66.6
	7.5	10	IE3	89	90.7	90.4	0.9	-	13.6	7.9	-	144	83.1
160 ♦	11	15	IE3	90.1	91.4	91.2	0.8	-	21.3	12.3	-	184	106.2
160	15	20	IE3	91.5	92	91.9	0.9	-	26.2	15.2	-	215	124
160	18.5	25	IE3	90.9	92.4	92.4	0.9	-	32.8	19.0	-	299	173
180	22	30	IE3	92.5	92.9	92.7	0.9	-	38.5	22.3	-	347	201
200	30	40	IE3	93.1	93.4	93.3	0.9	-	51.0	29.6	-	459	266
200	37	50	IE3	92	93.4	93.7	0.9	-	64.0	37.1	-	524	303
225	45	60	IE3	93.8	93.9	94	0.9	-	77.0	44.5	-	601	347

♦ MOTOR DATA ETM

EBARA Pumps Europe S.p.A. reserves the right to make changes without prior notice.

NOTE

EBARA Pumps Europe S.p.A. reserves the right to make changes without prior notice.

EBARA Pumps Europe S.p.A. reserves the right to make changes without prior notice.

NOTE

EBARA Pumps Europe S.p.A. reserves the right to make changes without prior notice.

EBARA Pumps Europe S.p.A.
Via Torri di Confine 2/1 int. C
36053 Gambellara (Vicenza), Italia
Phone +39 0444 706811
Fax +39 0444 405811
ebara_pumps@ebaraeurope.com
www.ebaraeurope.com

EBARA Pumps Europe S.p.A. reserves the right to make modifications without prior notice: all specifications could be subject to change

EBARA Corporation
11-1, Haneda Asahicho, Ohta-ku,
Tokyo 144-8510, Japan
Phone +81 03-3743-6111
Fax +81 03-5736-3100
www.ebara.com

REV. A 06/20