EBARA

Japanese Technology since 1912

EVM series - Vertical Multistage Pumps

Data Book 60Hz

EVMS 1-3-5-10-15-20
EVM 32-45-64

VERTICAL MULTISTAGE PUMPS

		Page
1. SPECIFICATIONS ①		
1.1	TYPICAL APPLICATIONS	101
1.2	PERFORMANCE RANGE	102
2. EVMS 1-3-5-10-15-20		200
2.1	PRODUCT FEATURES	201
2.2	PRODUCT SPECIFICATIONS	202
2.3	SHAFT SEAL	203
2.4	TYPE KEY and NAMEPLATE	204
2.5	PERFORMANCE RANGE	205
2.6	CURVE SPECIFICATIONS	206
2.7	SELECTION CHART	207
2.8	EVMS(L)1	209
	EVMSG1	215
2.9	EVMS(L)3	221
	EVMSG3	227
2.10	EVMS(L)5	233
	EVMSG5	239
2.11	EVMS(L)10	245
	EVMSG10	251
2.12	EVMS(L)15	257
	EVMSG15	263
2.13	EVMS(L)20	269
	EVMSG20	275
2.14	PACKING	281
3. EVM 32-45-64		300
3.1	PRODUCT FEATURES	301
3.2	PRODUCT SPECIFICATIONS	302
3.3	SHAFT SEAL	303
3.4	TYPE KEY and NAMEPLATE	304
3.5	PERFORMANCE RANGE	305
3.6	CURVE SPECIFICATIONS	306
3.7	SELECTION CHART	307
3.8	EVM(L)32	308
	EVMG32	323
3.9	EVM(L)45	338
	EVMG45	350
3.10	EVM(L)64	362
	EVMG64	372
3.11	PACKING	382
4. MOTOR DATA		400
4.1	NOISE DATA	401
4.2	TECHNICAL MOTOR DATA	402
	EVMS 1-3-5-10-15-20	402
	EVM 32-45-64	403

Rev.B

①click INDEX to jump CORRESPONDING SECTION
②click ☰ to go back to INDEX

②

EBARA Pumps Europe reserves the right to make changes without prior notice

VERTICAL MULTISTAGE PUMPS

TYPICAL APPLICATIONS

INDUSTRY	BUILDING SERVICE	WATER SUPPLY
• **Water treatment** reverse osmosis ultra-filtration water purification micro-filtration softening, ionizing and demineralising systems swimming pools separators • **Boiler feeding** steam systems condensate systems • **Wash and clean** vehicle washing systems industrial part washing laundry systems supply of liquids with acids and bases supply of chemical liquids • **Chilling** handling of refrigerants for cooling thermal control systems industrial cooling laser cooling • **Machine tooling** cooling lubricant supply for tooling machines • **Pressure boosting** pressure boosting for industrial use • **Food & beveage** food washing systems bottle wash systems • **Pharmaceutical industries** • **Marine applications** freshwater, deckwash, high fog and fire fighting on ships	• **Pressure boosting** pressure boosting for buildings pressure boosting for high rise buildings/hotels • **Sprinkler systems** • **Fire fighting systems** jockey pump • **District heating** • **Heat exchangers / fan heaters** • **Air conditioning systems** • **Heating systems**	• **Water treatment** water treatment plants filtration water treatment plants transfer • **Pressure boosting** transfer from water treatment plants (mains) • **Irrigation** golf course / sport fields irrigation • **Agriculture** sprinkler irrigation drip irrigation

EBARA Pumps Europe reserves the right to make changes without prior notice

VERTICAL MULTISTAGE PUMPS

PERFORMANCE RANGE
EVMS(.)1-3-5-10-15-20
EVM(.)32-45-64

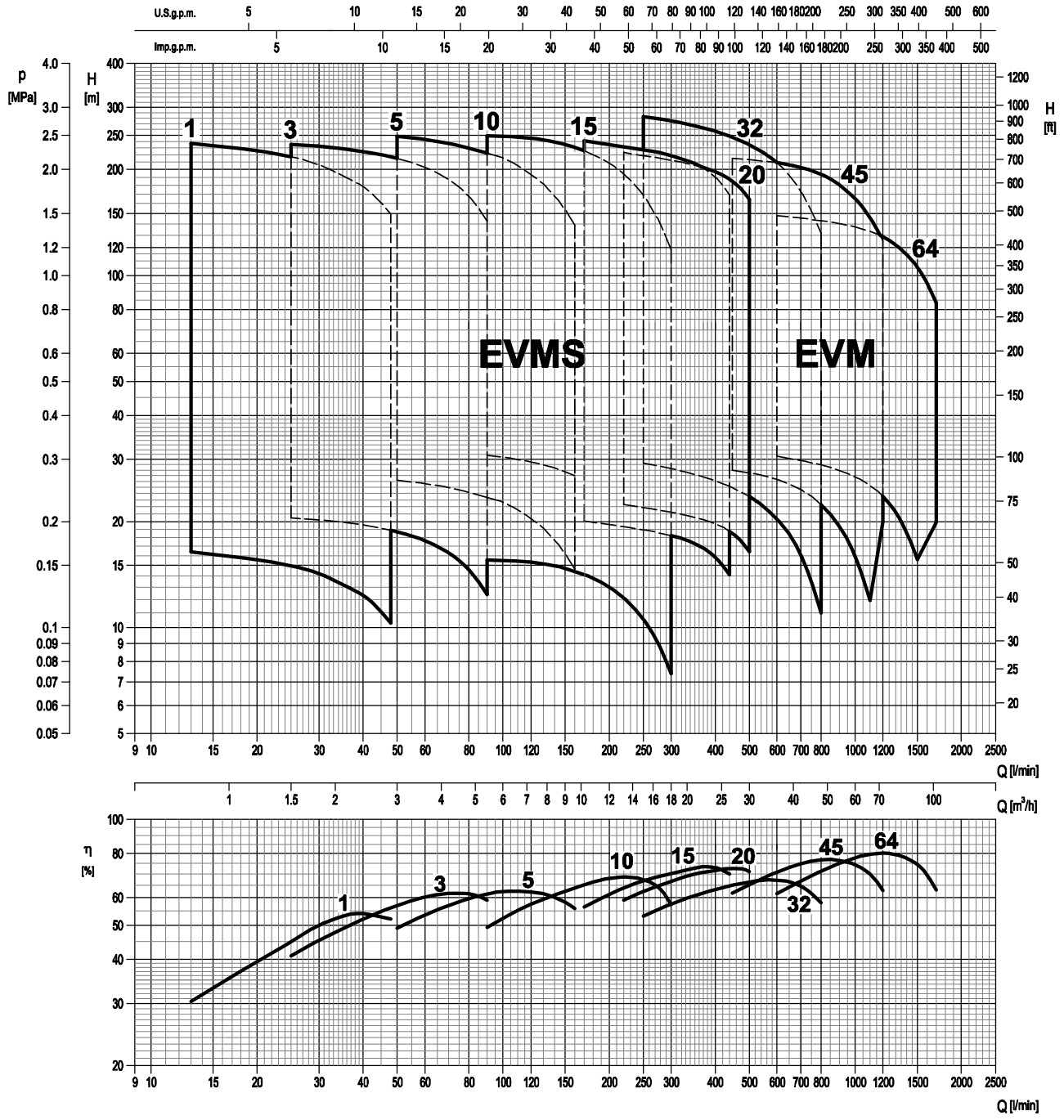

EBARA Pumps Europe reserves the right to make changes without prior notice

EVMS

EBARA Pumps Europe reserves the right to make changes without prior notice

PRODUCT FEATURES

[General]

1. **Pump Type**
   The EVMS is Non-self-priming, vertical multistage in line, centrifugal pumps.

2. **Model range**
   The EVMS comes in **1,3,5,10,15 and 20 m3/h flow sizes** for the majority market needs.

3. **Maximum operating pressure**
   The EVMS can be operated **at 16 bar or 25 bar as maximum.**

4. **Operating temperature range**
   The EVMS can be operated **from - 30 to + 140 ℃** as the maximum.

5. **Material options**
   AISI 304, AISI 316 and Cast iron versions are available.

6. **Motor**
   The EVMS can be coupled with **the commercial motors** that are acquired in the markets.
   PTC sensor is available from 1.5 kW motor.

[Main Product Features]

1. **Innovative hydraulic solutions**
   - **Commercial motors** can be fitted to all of the pump models without any modifications thanks to low pump axial thrust load.
   - Low axial thrust load impeller can ensure **long life of the motor bearing.**

2. **Energy saving**
   - **High efficiency IE2 motor**
   - **The VFD (Variable frequency drive)** and **the commercial sensor** can be directly mounted on EVMS to **maintain physical constant operations** such as pumping pressure depending on the conditions of use.

3. **Piping connection options**
   - The various pipe connections are available depending on the application requirements **Oval flange / Round flange / Loose flange / Victaulic® / Clamp**
   - The external dimensions can be adjusted to the replacement of the existing pump in the wide majority

4. **Shaft seal solutions**
   - Silicon carbide inclusions with graphite can be used as **dry lubricant to reduce friction.**
   - It's conforming to EN12756 (ex DIN 24960)

5. **Easy maintenance**
   - **The cartridge mechanical seal** enables **the plug in replacement** of the shaft seal without disassembling the motor bracket
   - **The spacer coupling** allows easy maintenance without having to remove heavy motors over 5.5 kW.

6. **Smart plug solutions**
   Air ventilation plug / Water filling & sensor plug / Commercial sensor fitting / Measurements for suction and discharge pressure / drain

EBARA Pumps Europe reserves the right to make changes without prior notice

PRODUCT SPECIFICATIONS
EVMS(.)1-3-5-10-15-20

PUMP																							
Version			EVMSG						EVMS						EVMSL					
Operating range	Nominal flow rate (m^3/h)		1	3	5	10	15	20	1	3	5	10	15	20	1	3	5	10	15	20
	Maximum working pressure		1.6 / 2.5 MPa (16 bar/ 25 bar)																	
	Liquid temperature range		-30℃ to 140℃																	
Key Components Material	Impeller		EN 1.4301 (AISI 304)												EN 1.4401 (AISI 316)					
	Intermediate casing		EN 1.4301 (AISI 304)												EN 1.4401 (AISI 316)					
	Liner ring		EN 1.4301 (AISI 304) + PPS												EN 1.4401 (AISI 316) + PPS					
	Bottom casing		Cast Iron						EN 1.4301 (AISI 304)						EN 1.4401 (AISI 316)					
	Casing cover		EN 1.4301 (AISI 304)												EN 1.4401 (AISI 316)					
	Shaft	EN 1.4301 (AISI 304)	EVMSG / EVMS 1-3-10 , EVMSG / EVMS 5-15-20 (depend on models)																	
		EN 1.4404 (AISI 316L)	EVMSL 1-3-10 , EVMSL 5-15-20 (depend on models)																	
		EN 1.4462 (AISI 329A)	EVMSG / EVMS / EVMSL 5-15-20 (depend on models)																	
	Shaft sleeve bearing		Tungsten carbide																	
	Shaft Seal		See the shaft seal options																	
	O-ring	EPDM	●	●	●	●	●	●	●	●	●	●	●	●	●	●	●	●	●	●
		FPM	○	○	○	○	○	○	○	○	○	○	○	○	○	○	○	○	○	○
	Outer casing		EN 1.4301 (AISI 304)												EN 1.4404 (AISI 316L)					
	Motor Bracket		Cast Iron																	
	Tie rod		Galvanized steel 6.8 strength class ISO 898/1																	
	Coupling	up to 4 kW	Die cast aluminium																	
		from 5.5 kW	Cast Iron																	
	Base		Cast Iron						Die cast aluminium											
Pipe connection	Oval flange	up to 16 bar	●	●	●	●	●	●	●	●	●	●	●	●	●	●	●	●	●	●
	Round flange (DIN)	up to 16 bar	○	○	○	○	○	○	○	○	○	○	○	○	○	○	○	○	○	○
		from 16 bar to 25 bar	●	●	●	●	●	●	●	●	●	●	●	●	●	●	●	●	●	●
	Loose round flange (DIN)	up to 16 bar							○	○	○	○	○	○	○	○	○	○	○	○
		from 16 bar to 25 bar							○	○	○	○	○	○	○	○	○	○	○	○
	Victaulic®	up to 16/25 bar							○	○	○	○	○	○	○	○	○	○	○	○
	Clamp	up to 16/25 bar							○	○	○	○	○	○	○	○	○	○	○	○

Legend: ● Standard ○ Options

MOTOR		
Power Source	Frequency	60 Hz
	Phase	Three Phase
	Rotation speed	≈ 3500 min-1
	Power rating	0.37 ÷ 18.5 kW 0.5 ÷ 25 HP
	Voltage	220/380 ± 10% V (up to 4kW) 265/460 ± 10% V (up to 4kW) 380/660 ± 10% V (above 5.5 kW) 460 ± 10% V (above 5.5 kW)
Type	Type	Electric - TEFC
	Efficiency Level	- from 0.37 up to 0.55 kW IE2 from 0.75 up to 4.0 kW (220-380V / 265-460V) IE2 above 5.5 kW (380-660V / 460V)
	No° of poles	2
	Protection degree	IP 55
	Insulation Class	F (temperature rise class B)
Others	Thermal Protection	PTC is available for the above 1.5 kW
	Casing Material	Aluminium
	Flange mount (IEC motor)	IM B14 (up to 4 kW) IM B5 (above 5.5 kW)

EBARA Pumps Europe reserves the right to make changes without prior notice

SHAFT SEAL
EVMS(.)1-3-5-10-15-20

1. Shaft Seal

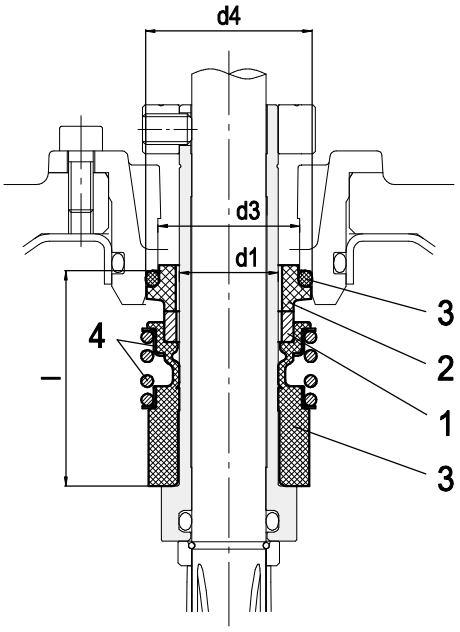

up to 16 bar
Cartridge Unbalanced type

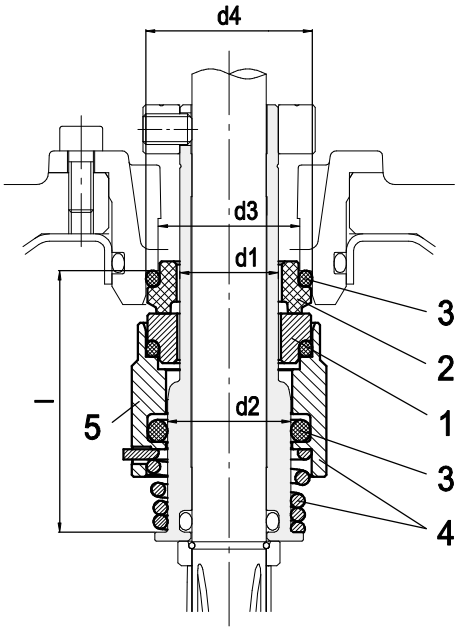

from 16 to 25 bar
Cartridge Balanced type

2. Type of Shaft Seal and Dimensions [mm]

Pump model	Max operating temperature	Shaft seal type		Shaft seal material										Type key
Max operating pressure		Cartridge		1		2		3		4	5			
		Unbalanced	Balanced	Rotating Part	Code	Stationary Part	Code	Elastomers	Code	Compression spring	Collar	Code		
up to 16 bar	- 30℃ to + 120℃	●		SiC	(Q_1)	Carbon	(B)	EPDM	(E)	AISI 316		(G)		Q_1BEG
	- 30℃ to + 80℃	○		SiC	(Q_1)	Carbon	(B)	FPM	(V)	AISI 316		(G)		Q_1BVG
	- 30℃ to + 140℃		○	SiC with graphite	(Q_g)	SiC	(Q_1)	EPDM	(E)	AISI 316		(G)		HQ_gQ_1EG
	- 30℃ to + 80℃		○	SiC with graphite	(Q_g)	SiC	(Q_1)	FPM	(V)	AISI 316		(G)		HQ_gQ_1VG
	- 30℃ to + 140℃		○	SiC	(Q_1)	Carbon	(B)	EPDM	(E)	AISI 316		(G)		HQ_1BEG
from 16 bar to 25 bar	- 30℃ to + 140℃		●	SiC	(Q_1)	Carbon	(B)	EPDM	(E)	AISI 316		(G)		HQ_1BEG
	- 30℃ to + 80℃		○	SiC	(Q_1)	Carbon	(B)	FPM	(V)	AISI 316		(G)		HQ_1BVG
	- 30℃ to + 140℃		○	SiC with graphite	(Q_g)	SiC	(Q_1)	EPDM	(E)	AISI 316		(G)		HQ_gQ_1EG
	- 30℃ to + 80℃		○	SiC with graphite	(Q_g)	SiC	(Q_1)	FPM	(V)	AISI 316		(G)		HQ_gQ_1VG

● standard ○ options

Pump model	Shaft seal type		Max operating pressure	d1 [mm]	d2 [mm]	d3 [mm]	d4 [mm]	l [mm]
EVMS 1/3/5	Cartridge	Unbalanced	16 bar	16	-	23	27	35
		Balanced	25 bar		20			42.5
EVMS 10/15/20	Cartridge	Unbalanced	16 bar	20	-	29	35	37.5
		Balanced	25 bar		24			45

EBARA Pumps Europe reserves the right to make changes without prior notice

TYPE KEY
EVMS(.)1-3-5-10-15-20

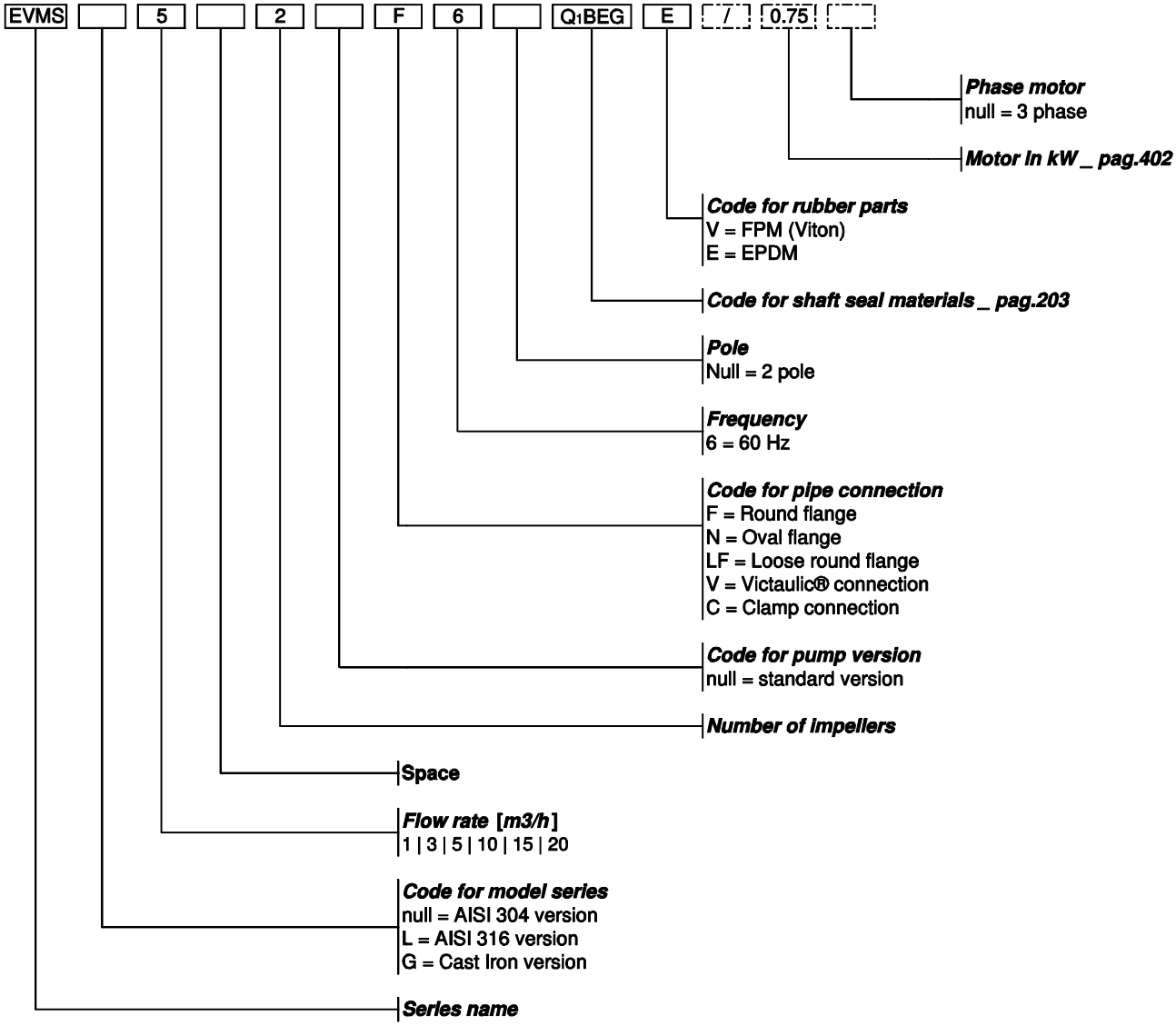

Example for **pump without motor**
EVMS5 2F6Q1BEGE

Example for **pump with motor**
EVMS5 2F6Q1BEGE/0.75

NAMEPLATE

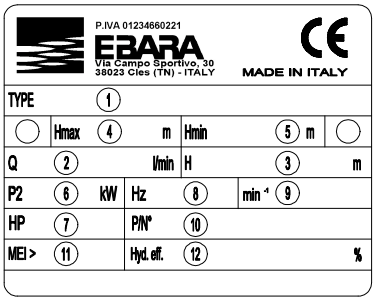

1)	"TYPE"	Pump model
2)	"Q"	Indicates upper and lower flow rate limits
3)	"H"	Indicates head limits corresponding to minimum and maximum flow rate
4)	"Hmax"	Maximum head
5)	"Hmin"	Minimum head
6)	"P2"	Rated power of the motor (output at shaft)
7)	"HP"	Rated power of the motor expressed in HP (Horse Power)
8)	"Hz"	Frequency
9)	"min-1"	Speed of rotation
10)	"P/N°"	Pump item number
11)	"MEI"	Index of the pump's quality in relation to its efficiency
12)	"Hyd. Eff. "	Hydraulic efficiency of the pump

EBARA Pumps Europe reserves the right to make changes without prior notice

VERTICAL MULTISTAGE PUMPS EVMS

PERFORMANCE RANGE
EVMS(.)1-3-5-10-15-20

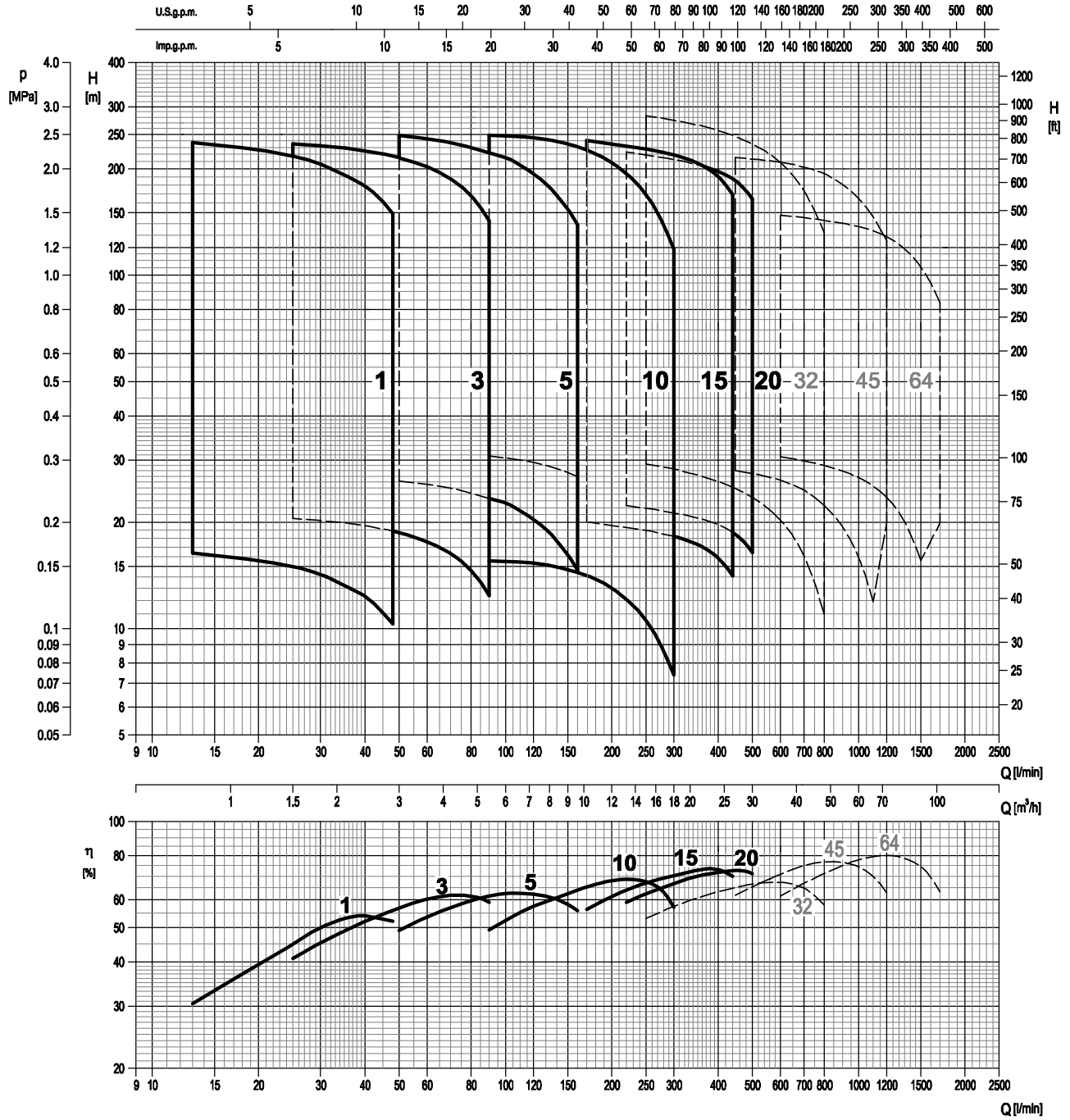

EBARA Pumps Europe reserves the right to make changes without prior notice

CURVE SPECIFICATIONS

The specifications below qualify the curves shown on the following pages.

Tolerances according to ISO 9906:2012 - Grade 3B.
The curves refer to effective speed of asynchronous motors at 60 Hz, 2 poles.
Measurements were carried out with clean water at 20°C of temperature and with a kinematic viscosity of ν = 1 mm^2/s (1 cSt).
The NPSH curve is an average curve obtained in the same conditions of performance curves.
During the pump selection, consider to get a safety margin of at least 0.5 m.
The continuous curves indicate the recommended working range. The dotted curve is only a guide.
In order to avoid the risk of over-heating, the pumps should not be used at a flow rate below 10% of best efficiency point.

Symbols explanation:

Q	=	volume flow rate
H	=	total head
P_2	=	pump power input (shaft power)
η	=	pump efficiency
NPSH	=	net positive suction head required by the pump

EBARA Pumps Europe reserves the right to make changes without prior notice

SELECTION CHART
EVMS(.)1-3-5

	Pump Type	Motor			Maximum working pressure (MPa)	Q=Capacity								
		kW	HP	Size		l/min 0	13	25	48	50	75	90	120	160
						m³/h 0	0.8	1.5	2.9	3.0	4.5	5.4	7.2	9.6
	Three phase					H=Total manometric head in meters								
1	EVMS(.)1 2/0.37	0.37	0.5	71	1.6	17.2	16.4	15	10.3	-	-	-	-	-
	EVMS(.)1 3/0.37	0.37	0.5	71		25.8	24.6	22.5	15.5	-	-	-	-	-
	EVMS(.)1 4/0.37	0.37	0.5	71		34.5	32.7	30.0	20.6	-	-	-	-	-
	EVMS(.)1 5/0.37	0.37	0.5	71		43.1	40.9	37.5	25.4	-	-	-	-	-
	EVMS(.)1 6/0.55	0.55	0.75	71		51.5	49.1	45	31	-	-	-	-	-
	EVMS(.)1 7/0.55	0.55	0.75	71		60.5	57.5	52.5	36.1	-	-	-	-	-
	EVMS(.)1 8/0.75	0.75	1	80		69	65.5	60	41.5	-	-	-	-	-
	EVMS(.)1 9/0.75	0.75	1	80		77.5	73.5	67.5	46.5	-	-	-	-	-
	EVMS(.)1 10/0.75	0.75	1	80		86	82	75	51.5	-	-	-	-	-
	EVMS(.)1 11/1.1	1.1	1.5	80		94.5	90	82.5	57	-	-	-	-	-
	EVMS(.)1 12/1.1	1.1	1.5	80		103	98	90	62	-	-	-	-	-
	EVMS(.)1 13/1.1	1.1	1.5	80		112	106	97.5	67	-	-	-	-	-
	EVMS(.)1 14/1.1	1.1	1.5	80		121	115	105	72.5	-	-	-	-	-
	EVMS(.)1 16/1.5	1.5	2	90 S		138	131	120	82.5	-	-	-	-	-
	EVMS(.)1 18/1.5	1.5	2	90 S		155	147	135	93	-	-	-	-	-
	EVMS(.)1 20/1.5	1.5	2	90 S	2.5	172	164	150	103	-	-	-	-	-
	EVMS(.)1 22/2.2	2.2	3	90 L		190	180	165	114	-	-	-	-	-
	EVMS(.)1 24/2.2	2.2	3	90 L		207	196	180	124	-	-	-	-	-
	EVMS(.)1 26/2.2	2.2	3	90 L		224	213	195	134	-	-	-	-	-
	EVMS(.)1 27/2.2	2.2	3	90 L		233	221	202	139	-	-	-	-	-
	EVMS(.)1 29/2.2	2.2	3	90 L		250	237	217	150	-	-	-	-	-
3	EVMS(.)3 2/0.37	0.37	0.5	71	1.6	21.4	-	20.5	18.9	18.7	15.5	12.4	-	-
	EVMS(.)3 3/0.55	0.55	0.75	71		32.1	-	30.7	28.3	28	23.3	18.6	-	-
	EVMS(.)3 4/0.75	0.75	1	80		43	-	41	37.7	37.4	31	24.8	-	-
	EVMS(.)3 5/0.75	0.75	1	80		53.5	-	51	47	46.5	38.8	31	-	-
	EVMS(.)3 6/1.1	1.1	1.5	80		64.5	-	61.5	56.5	56	46.5	37.2	-	-
	EVMS(.)3 7/1.1	1.1	1.5	80		75	-	71.5	66	65.5	54.5	43.5	-	-
	EVMS(.)3 8/1.5	1.5	2	90 S		85.5	-	82	75.5	74.5	62	49.5	-	-
	EVMS(.)3 9/1.5	1.5	2	90 S		96.5	-	92	85	84	69	56	-	-
	EVMS(.)3 10/1.5	1.5	2	90 S		107	-	102	94.5	93.5	77.5	62	-	-
	EVMS(.)3 11/2.2	2.2	3	90 L		118	-	113	104	103	85.5	68	-	-
	EVMS(.)3 12/2.2	2.2	3	90 L		129	-	123	113	112	93.0	74.5	-	-
	EVMS(.)3 13/2.2	2.2	3	90 L		139	-	133	123	122	101	80.5	-	-
	EVMS(.)3 14/2.2	2.2	3	90 L		150	-	143	132	131	109	86.5	-	-
	EVMS(.)3 15/3.0	3.0	4	100 L		161	-	154	142	140	116	93	-	-
	EVMS(.)3 16/3.0	3.0	4	100 L	2.5	172	-	164	151	150	124	99	-	-
	EVMS(.)3 17/3.0	3.0	4	100 L		182	-	174	160	159	132	105	-	-
	EVMS(.)3 19/3.0	3.0	4	100 L		204	-	195	179	178	147	118	-	-
	EVMS(.)3 20/3.0	3.0	4	100 L		214	-	205	189	187	155	124	-	-
	EVMS(.)3 21/4.0	4.0	5.5	112 M		225	-	215	198	196	163	130	-	-
	EVMS(.)3 22/4.0	4.0	5.5	112 M		236	-	225	208	206	171	136	-	-
	EVMS(.)3 23/4.0	4.0	5.5	112 M		247	-	235	217	215	178	143	-	-
5	EVMS(.)5 2/0.75	0.75	1	80	1.6	27.6	-	-	-	26.1	24.6	23.4	20.4	14.6
	EVMS(.)5 3/1.1	1.1	1.5	80		41.4	-	-	-	39.2	36.9	35.1	30.6	21.9
	EVMS(.)5 4/1.5	1.5	2	90 S		55	-	-	-	52.5	49	47	40.5	29.3
	EVMS(.)5 5/2.2	2.2	3	90 L		69	-	-	-	65.5	61.5	58	51	36.6
	EVMS(.)5 6/2.2	2.2	3	90 L		83	-	-	-	78.5	74	70	61	44
	EVMS(.)5 7/3.0	3.0	4	100 L		96.5	-	-	-	91.5	86	82	71.5	51
	EVMS(.)5 8/3.0	3.0	4	100 L		110	-	-	-	105	98.5	93.5	81.5	58.5
	EVMS(.)5 9/3.0	3.0	4	100 L		124	-	-	-	118	111	105	91.5	66
	EVMS(.)5 10/4.0	4.0	5.5	112 M		138	-	-	-	131	123	117	102	73
	EVMS(.)5 11/4.0	4.0	5.5	112 M		152	-	-	-	144	135	129	112	80.5
	EVMS(.)5 12/4.0	4.0	5.5	112 M		166	-	-	-	157	148	140	122	88
	EVMS(.)5 13/5.5	5.5	7.5	132 S	2.5	179	-	-	-	170	160	152	132	95
	EVMS(.)5 14/5.5	5.5	7.5	132 S		193	-	-	-	183	172	164	143	102
	EVMS(.)5 15/5.5	5.5	7.5	132 S		207	-	-	-	196	185	175	153	110
	EVMS(.)5 16/5.5	5.5	7.5	132 S		221	-	-	-	209	197	187	163	117
	EVMS(.)5 17/7.5	7.5	10	132 S		235	-	-	-	222	209	199	173	124
	EVMS(.)5 19/7.5	7.5	10	132 S		262	-	-	-	248	234	222	194	139

1.6 MPa=16 bar ; 2.5 MPa=25 bar

EBARA Pumps Europe reserves the right to make changes without prior notice

SELECTION CHART
EVMS(.)10-15-20

	Pump Type	Motor			Maximum working pressure (MPa)	Q=Capacity												
						l/min 0	90	120	160	170	200	220	250	300	350	400	440	500
	Three phase	kW	HP	Size		m³/h 0	5.4	7.2	9.6	10.2	12.0	13.2	15	18	21	24	26.4	30
						H=Total manometric head in meters												
10	EVMS(.)10 1/0.75	0.75	1	80	1.6	16	15.6	15.3	14.4	14.1	13	12.1	10.6	7.4	-	-	-	-
	EVMS(.)10 2/1.5	1.5	2	90 S		32	31.1	30.7	28.9	28.2	26.1	24.3	21.1	14.8	-	-	-	-
	EVMS(.)10 3/2.2	2.2	3	90 L		48	46.5	46	43.3	42.4	39.1	36.4	31.7	22.2	-	-	-	-
	EVMS(.)10 4/3.0	3.0	4	100 L		64	62	61.5	58	56.5	52	48.5	42	29.6	-	-	-	-
	EVMS(.)10 5/4.0	4.0	5.5	112 M		80	77.5	76.5	72	70.5	65	60.5	52.5	37	-	-	-	-
	EVMS(.)10 6/4.0	4.0	5.5	112 M		96	93.5	92	86.5	84.5	78	73	63.5	44.5	-	-	-	-
	EVMS(.)10 7/5.5	5.5	7.5	132 S		112	109	107	101	99	91	85	74	52	-	-	-	-
	EVMS(.)10 8/5.5	5.5	7.5	132 S		128	125	123	115	113	104	97.1	84.5	59	-	-	-	-
	EVMS(.)10 9/5.5	5.5	7.5	132 S		144	140	138	130	127	117	109	95	66.5	-	-	-	-
	EVMS(.)10 10/7.5	7.5	10	132 S		160	156	153	144	141	130	121	106	74	-	-	-	-
	EVMS(.)10 11/7.5	7.5	10	132 S	2.5	176	171	169	159	155	143	134	116	81.5	-	-	-	-
	EVMS(.)10 12/7.5	7.5	10	132 S		192	187	184	173	170	156	146	127	89	-	-	-	-
	EVMS(.)10 14/11	11	15	160 M		224	218	215	202	198	182	170	148	104	-	-	-	-
	EVMS(.)10 15/11	11	15	160 M		240	233	230	216	219	195	182	158	111	-	-	-	-
	EVMS(.)10 16/11	11	15	160 M		256	249	245	231	226	208	194	169	118	-	-	-	-
15	EVMS(.)15 1/1.5	1.5	2	90 S	1.6	21.7	-	-	-	19.1	18.4	18.0	17.4	15.8	14.2	12.1	9.9	-
	EVMS(.)15 2/3.0	3.0	4	100 L		43.6	-	-	-	40	39.1	38.6	37.9	36.5	34.7	31.7	28.2	-
	EVMS(.)15 3/5.5	5.5	7.5	132 S		65.4	-	-	-	60	58.5	58	57	54.5	52	47.5	42.5	-
	EVMS(.)15 4/7.5	7.5	10	132 S		87	-	-	-	80.5	78.5	78	76	73	69	63.5	56.5	-
	EVMS(.)15 5/7.5	7.5	10	132 S		109	-	-	-	100	98	96.5	95	91	86.5	79.5	70.5	-
	EVMS(.)15 6/11	11	15	160 M		131	-	-	-	120	117	116	114	109	104	95.5	84.5	-
	EVMS(.)15 7/11	11	15	160 M		153	-	-	-	141	137	135	133	128	121	111	99	-
	EVMS(.)15 8/15	15	20	160 M	2.5	174	-	-	-	161	157	154	152	146	138	127	113	-
	EVMS(.)15 9/15	15	20	160 M		196	-	-	-	181	176	174	171	164	156	143	127	-
	EVMS(.)15 10 /15	15	20	160 M		218	-	-	-	201	196	193	190	182	173	159	141	-
	EVMS(.)15 11/18.5	18.5	25	160 L		240	-	-	-	221	215	212	208	201	190	175	155	-
	EVMS(.)15 12/18.5	18.5	25	160 L		262	-	-	-	241	235	232	227	219	208	190	169	-
20	EVMS(.)20 1/2.2	2.2	3	90 L	1.6	28.0	-	-	-	-	-	23.2	22.4	20.9	18.9	16.7	14.7	10.6
	EVMS(.)20 2/4.0	4.0	5.5	112 M		49.5	-	-	-	-	-	44.5	44	42.5	41	39.4	37.5	32.8
	EVMS(.)20 3/7.5	7.5	10	132 S		74	-	-	-	-	-	67	65.5	64	61.5	59	56	49
	EVMS(.)20 4/7.5	7.5	10	132 S		99	-	-	-	-	-	89.5	87.5	85	82	79	75	65.5
	EVMS(.)20 5/11	11	15	160 M		124	-	-	-	-	-	112	110	106	103	98.5	93.5	82
	EVMS(.)20 6/11	11	15	160 M		148	-	-	-	-	-	134	131	128	123	118	112	98.5
	EVMS(.)20 7/15	15	20	160 M	2.5	173	-	-	-	-	-	156	153	149	144	138	131	115
	EVMS(.)20 8/15	15	20	160 M		198	-	-	-	-	-	179	175	170	164	158	150	131
	EVMS(.)20 9/18.5	18.5	25	160 L		223	-	-	-	-	-	201	197	191	185	177	169	148
	EVMS(.)20 10 /18.5	18.5	25	160 L		247	-	-	-	-	-	223	219	213	206	197	187	164

1.6 MPa=16 bar ; 2.5 MPa=25 bar

EBARA Pumps Europe reserves the right to make changes without prior notice

PERFORMANCE CURVE
EVMS(L)1

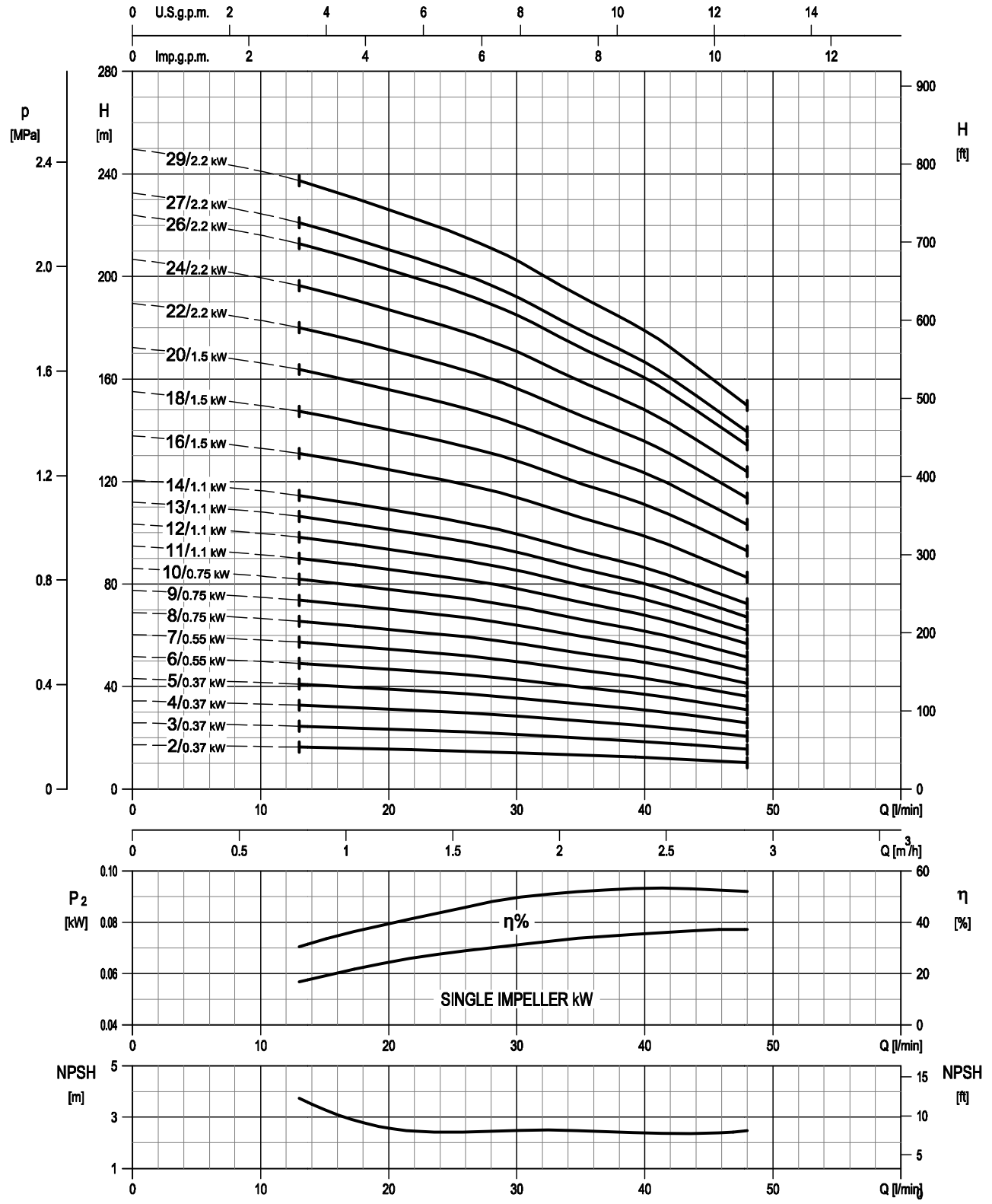

Rotation speed ≈3500 min-1
Test standard: ISO 9906:2012 - Grade 3B

EBARA Pumps Europe reserves the right to make changes without prior notice

TECHNICAL DATA
EVMS(L)1

Dimensional sketch

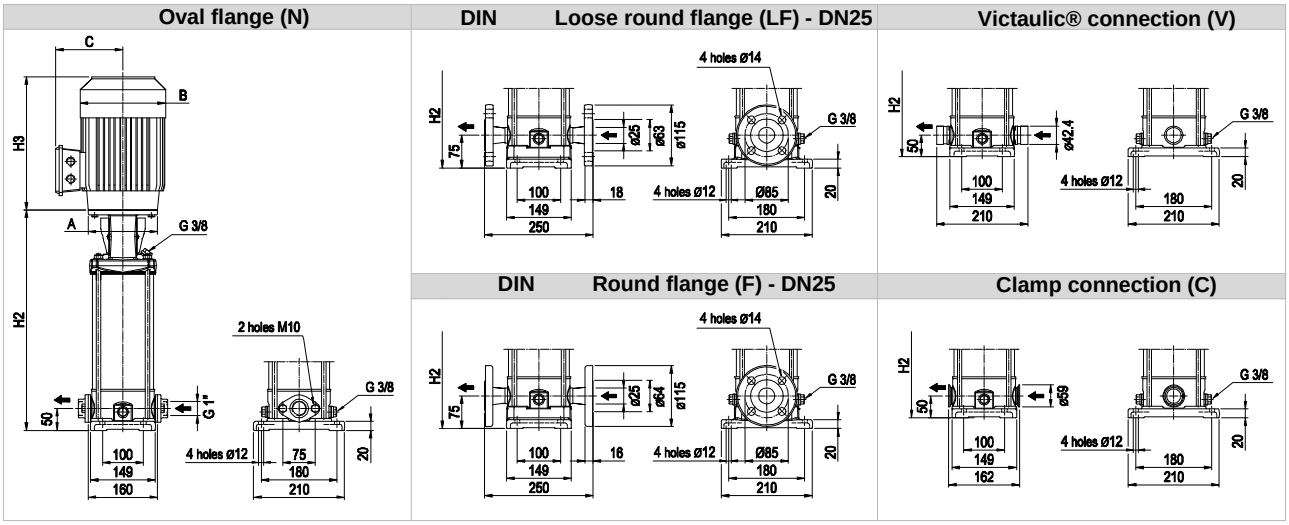

Dimensions [mm] and Weights [Kg]

Pump Type	Pmax [MPa]	Motor kW	Size	A	3 ~ B	C	H3	Oval flange (N) H2	Weight Pump	Weight Pump + Motor	Loose round flange (LF) Round flange (F) H2	Weight Pump	Weight Pump + Motor	Victaulic® connection (V) Clamp connection (C) H2	Weight Pump	Weight Pump + Motor
EVMS(L)1 2/0.37	1.6	0.37	71	ø105	139	114	216	250	10	15.8	275	10.7	16.5	250	10	15.8
EVMS(L)1 3/0.37	1.6	0.37	71	ø105	139	114	216	271	10.5	16.3	296	11.2	17	271	10.4	16.2
EVMS(L)1 4/0.37	1.6	0.37	71	ø105	139	114	216	292	10.9	16.7	317	11.6	17.4	292	10.8	16.6
EVMS(L)1 5/0.37	1.6	0.37	71	ø105	139	114	216	313	11.4	17.2	338	12	17.8	313	11.3	17.1
EVMS(L)1 6/0.55	1.6	0.55	71	ø105	139	114	216	334	11.8	18	359	12.4	18.6	334	11.7	17.9
EVMS(L)1 7/0.55	1.6	0.55	71	ø105	160	139	232	355	12.5	18.7	380	13.1	19.3	355	12.4	18.6
EVMS(L)1 8/0.75	1.6	0.75	80	ø120	160	139	232	386	12.9	22.4	411	13.6	23.1	386	12.8	22.3
EVMS(L)1 9/0.75	1.6	0.75	80	ø120	160	139	232	407	13.3	22.8	432	14	23.5	407	13.3	22.8
EVMS(L)1 10/0.75	1.6	0.75	80	ø120	160	139	232	428	13.8	23.3	453	14.4	23.9	428	13.7	23.2
EVMS(L)1 11/1.1	1.6	1.1	80	ø120	160	139	232	449	14.2	25.3	474	14.9	26	449	14.1	25.2
EVMS(L)1 12/1.1	1.6	1.1	80	ø120	160	139	232	470	14.6	25.7	495	15.3	26.4	470	14.6	25.7
EVMS(L)1 13/1.1	1.6	1.1	80	ø120	160	139	232	491	15.3	26.4	516	16	27.1	491	15.3	26.4
EVMS(L)1 14/1.1	1.6	1.1	80	ø120	160	139	232	512	15.7	26.8	537	16.4	27.5	512	15.7	26.8
EVMS(L)1 16/1.5	1.6	1.5	90 S	ø140	180	148	267	564	16.7	29.4	589	17.4	30.1	564	16.7	29.4
EVMS(L)1 18/1.5	1.6	1.5	90 S	ø140	180	148	267	606	17.6	30.3	631	18.3	31.0	606	17.6	30.3
EVMS(L)1 20/1.5	2.5	1.5	90 S	ø140	180	148	267	-	-	-	673	19.2	31.9	648	18.5	31.2
EVMS(L)1 22/2.2	2.5	2.2	90 L	ø140	180	148	267	-	-	-	715	20.6	36.6	690	19.9	35.9
EVMS(L)1 24/2.2	2.5	2.2	90 L	ø140	180	148	267	-	-	-	757	21.6	37.6	732	20.9	36.9
EVMS(L)1 26/2.2	2.5	2.2	90 L	ø140	180	148	267	-	-	-	799	22.5	38.5	774	21.8	37.8
EVMS(L)1 27/2.2	2.5	2.2	90 L	ø140	180	148	267	-	-	-	820	23	39	795	22.3	38.3
EVMS(L)1 29/2.2	2.5	2.2	90 L	ø140	180	148	267	-	-	-	862	23.9	39.9	837	23.2	39.2

1.6 MPa=16 bar ; 2.5 MPa=25 bar
- not available model

EBARA Pumps Europe reserves the right to make changes without prior notice

VERTICAL MULTISTAGE PUMPS EVMS

SECTIONAL VIEW
EVMS(L)1

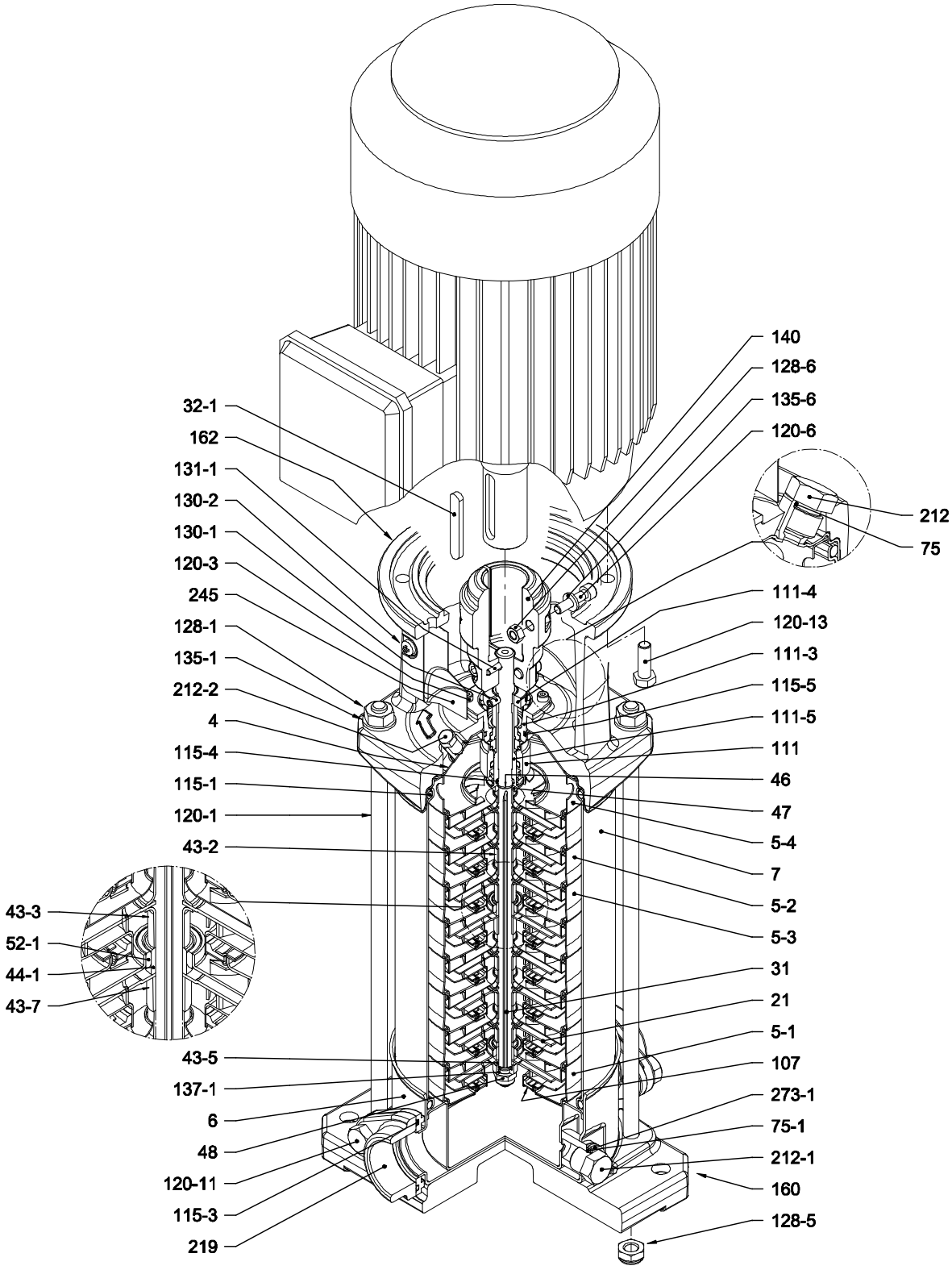

with Oval flange (N)

EBARA Pumps Europe reserves the right to make changes without prior notice

PIPE CONNECTION
EVMS(L)1

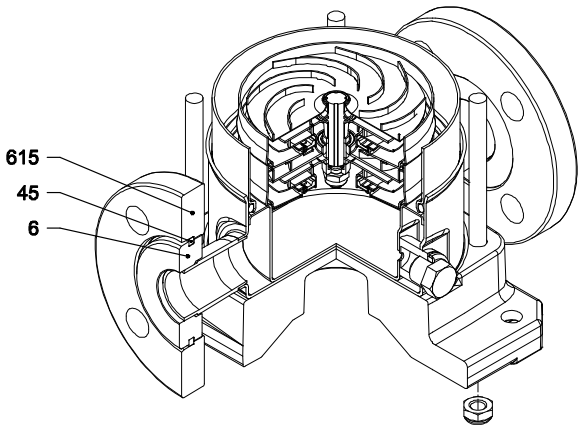

with Loose round flange (LF)

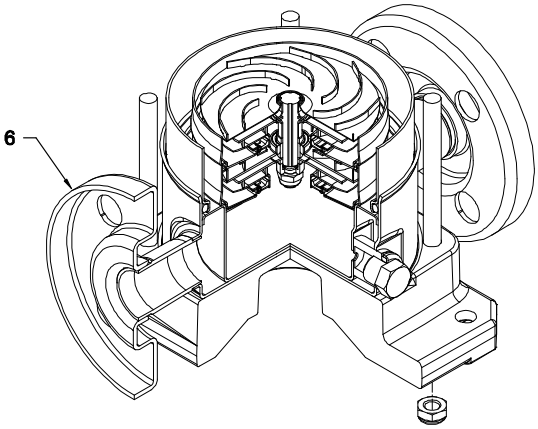

with Round flange (F)

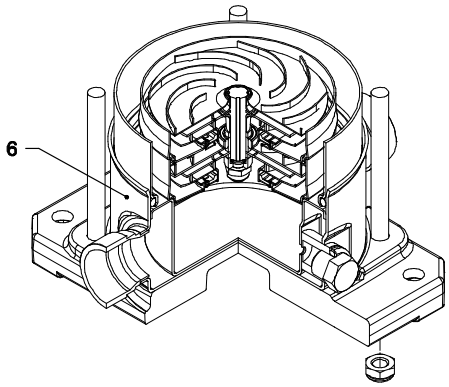

with Victaulic® connection (V)

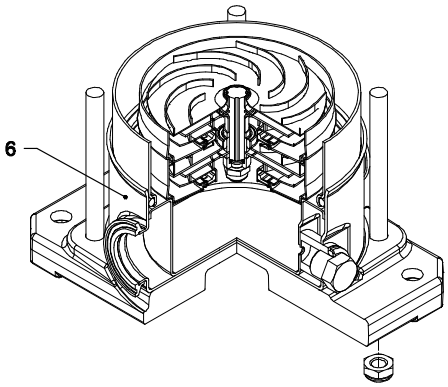

with Clamp connection (C)

EBARA Pumps Europe reserves the right to make changes without prior notice

SECTIONAL TABLE
EVMS(L)1

N°	PART NAME		MATERIAL EVMS	MATERIAL EVMSL	DIMENSIONS	STANDARD
4	Casing cover		EN 1.4301 (AISI 304)	EN 1.4401 (AISI 316)		
5-1	Suction casing		EN 1.4301 (AISI 304)	EN 1.4401 (AISI 316)		
5-2	Intermediate Casing		EN 1.4301 (AISI 304)	EN 1.4401 (AISI 316)		
5-3	Intermediate casing bearing		EN 1.4301 (AISI 304)	EN 1.4401 (AISI 316)		
5-4	Discharge casing		EN 1.4301 (AISI 304)	EN 1.4401 (AISI 316)		
6	Bottom casing		EN 1.4308 (AISI 304)	EN 1.4408 (AISI 316)		
7	Outer casing		EN 1.4301 (AISI 304)	EN 1.4404 (AISI 316L)		
21	Impeller		EN 1.4301 (AISI 304)	EN 1.4401 (AISI 316)		
31	Shaft		EN 1.4301 (AISI 304)	EN 1.4404 (AISI 316L)		
32-1	Adjuster Key		EN 1.4301 (AISI 304)			
43-2	Shaft sleeve (intermediate)		EN 1.4301 (AISI 304)	EN 1.4404 (AISI 316L)		
43-3	Shaft sleeve (bearing)		EN 1.4301 (AISI 304)	EN 1.4401 (AISI 316)		
43-5	Shaft sleeve (last stage)		EN 1.4301 (AISI 304)	EN 1.4401 (AISI 316)		
43-7	Spacer		EN 1.4301 (AISI 304)	EN 1.4404 (AISI 316L)		
44-1	Shaft sleeve bearing		Tungsten carbide			
45	Flange holder		EN 1.4301 (AISI 304)			
46	Ring (mechanical seal)		EN 1.4301 (AISI 304)	EN 1.4401 (AISI 316)		
47	Ring Holder		EN 1.4301 (AISI 304)	EN 1.4401 (AISI 316)		
48	Impeller nut		A2-70 UNI 7323 with inox insert	A4-70 UNI 7323 with inox insert	M8	
52-1	Bearing		Tungsten carbide			
75	O-Ring (plug)		EPDM		D. 12.37x2.62	OR 3050
75-1	O-Ring (plug)		EPDM			
107	Liner ring		EN 1.4301 (AISI 304) + PPS	EN 1.4401 (AISI 316) + PPS		
111	Mechanical Seal		SiC/Carbon/EPDM			
111-3	Mechanical seal seat		EN 1.4301 (AISI 304)	EN 1.4401 (AISI 316)		
111-4	Seal holder		EN 1.4301 (AISI 304)			
111-5	Mechanical seal cartridge		EN 1.4301 (AISI 304)	EN 1.4401 (AISI 316)		
115-1	O-Ring (outer casing)		EPDM		D. 129.54x5.34	OR 6510
115-3	O-Ring		EPDM			
115-4	O-Ring (cartridge sleeve)		EPDM		D. 11.91x2.62	OR 115
115-5	O-Ring (seal cover)		EPDM		D.32.99x2.62	OR 3131
120-1	Tie-rod		Galvanized steel 6.8 strenght class ISO 898/1		M10	
120-3	Screw		A2-70 UNI 7323		M4x10	ISO 4762
120-6	Screw for coupling		Galvanized steel		M6x25	ISO 4762
120-11	Screw for counterflange		A2-70 UNI 7323			
120-13	Screw for motor	MEC 71-80	Galvanized steel 8.8 strenght class ISO 898/1		M6x20	ISO 4017
		MEC 90			M8x20	ISO 4017
128-1	Nut for tie rod		Galvanized steel		M10	UNI 5588
128-5	Nut for tie rod		A2-70 UNI 7323		M10	UNI 7474
128-6	Nut for coupling		Galvanized steel		M6	ISO 4032
130-1	Set screw		A2-70 UNI 7323		M5x8	UNI 5923
130-2	Screw for coupling guard		A2-70 UNI 7323		M5x6	UNI 7687
131-1	Pin for shaft		Carbon Steel		D. 4x32	UNI 4838
135-1	Washer		Galvanized steel		D. 10.5x21x2	UNI 6592
135-6	Washer		Carbon Steel		Ø6	
137-1	Impeller spacer		EN 1.4301 (AISI 304)	EN 1.4401 (AISI 316)		
140	Coupling	up to 4.0 kW	Die cast Aluminium EN AB-AISI11Cu2 (Fe)			
160	Base		Die cast Aluminium EN AB-AISI11Cu2 (Fe)			
162	Motor bracket		Cast iron EN-GJL-200-EN 1561			
212	Plug		EN 1.4301 (AISI 304)	EN 1.4401 (AISI 316)	G 3/8	
212-1	Plug		EN 1.4301 (AISI 304)	EN 1.4401 (AISI 316)	G 3/8	
212-2	Venting plug		EN 1.4404 (AISI 316L)			
219	Counter flange		EN 1.4301 (AISI 304)	EN 1.4401 (AISI 316)		
245	Coupling guard		EN 1.4301 (AISI 304)			
273-1	Plug Washer		EN 1.4301 (AISI 304)	EN 1.4401 (AISI 316)		
615	Flange		Nodular Cast Iron			

EBARA Pumps Europe reserves the right to make changes without prior notice

QUANTITY FOR MODEL EVMS(L)1

Pump Type	N°																												
	4	5-1	5-2	5-3	5-4	6	7	21	31	32-1	43-2	43-3	43-5	43-7	44-1	45**	46	47	48	52-1	75	75-1	107	111	111-3	111-4	111-5	115-1	115-3*	115-4	115-5
EVMS(L)1 2/0.37	1	1	/	1	1	1	1	2	1	1	/	1	/	/	1	4	2	1	1	1	1	2	2	1	1	1	1	2	2	1	1
EVMS(L)1 3/0.37	1	1	1	1	1	1	1	3	1	1	3	1	/	/	1	4	2	1	1	1	1	2	3	1	1	1	1	2	2	1	1
EVMS(L)1 4/0.37	1	1	2	1	1	1	1	4	1	1	5	1	/	/	1	4	2	1	1	1	1	2	4	1	1	1	1	2	2	1	1
EVMS(L)1 5/0.37	1	1	3	1	1	1	1	5	1	1	7	1	1	/	1	4	2	1	1	1	1	2	5	1	1	1	1	2	2	1	1
EVMS(L)1 6/0.55	1	1	4	1	1	1	1	6	1	1	9	1	/	/	1	4	2	1	1	1	1	2	6	1	1	1	1	2	2	1	1
EVMS(L)1 7/0.55	1	1	5	1	1	1	1	7	1	1	11	1	/	/	1	4	2	1	1	1	1	2	7	1	1	1	1	2	2	1	1
EVMS(L)1 8/0.75	1	1	6	1	1	1	1	8	1	1	13	1	/	/	1	4	2	1	1	1	1	2	8	1	1	1	1	2	2	1	1
EVMS(L)1 9/0.75	1	1	7	1	1	1	1	9	1	1	15	1	1	/	1	4	2	1	1	1	1	2	9	1	1	1	1	2	2	1	1
EVMS(L)1 10/0.75	1	1	8	1	1	1	1	10	1	1	17	1	/	/	1	4	2	1	1	1	1	2	10	1	1	1	1	2	2	1	1
EVMS(L)1 11/1.1	1	1	9	1	1	1	1	11	1	1	19	1	/	/	1	4	2	1	1	1	1	2	11	1	1	1	1	2	2	1	1
EVMS(L)1 12/1.1	1	1	10	1	1	1	1	12	1	1	21	1	/	/	1	4	2	1	1	1	1	2	12	1	1	1	1	2	2	1	1
EVMS(L)1 13/1.1	1	1	10	2	1	1	1	13	1	1	20	2	1	1	2	4	2	1	1	2	1	2	13	1	1	1	1	2	2	1	1
EVMS(L)1 14/1.1	1	1	11	2	1	1	1	14	1	1	22	2	/	1	2	4	2	1	1	2	1	2	14	1	1	1	1	2	2	1	1
EVMS(L)1 16/1.5	1	1	13	2	1	1	1	16	1	1	26	2	/	1	2	4	2	1	1	2	1	2	16	1	1	1	1	2	2	1	1
EVMS(L)1 18/1.5	1	1	15	2	1	1	1	18	1	1	30	2	/	1	2	4	2	1	1	2	1	2	18	1	1	1	1	2	2	1	1
EVMS(L)1 20/1.5	1	1	17	2	1	1	1	20	1	1	34	2	/	1	2	4	2	1	1	2	1	2	20	1	1	1	1	2	/	1	1
EVMS(L)1 22/2.2	1	1	19	2	1	1	1	22	1	1	38	2	/	1	2	4	2	1	1	2	1	2	22	1	1	1	1	2	/	1	1
EVMS(L)1 24/2.2	1	1	21	2	1	1	1	24	1	1	42	2	/	1	2	4	2	1	1	2	1	2	24	1	1	1	1	2	/	1	1
EVMS(L)1 26/2.2	1	1	23	2	1	1	1	26	1	1	46	2	/	1	2	4	2	1	1	2	1	2	26	1	1	1	1	2	/	1	1
EVMS(L)1 27/2.2	1	1	24	2	1	1	1	27	1	1	48	2	/	1	2	4	2	1	1	2	1	2	27	1	1	1	1	2	/	1	1
EVMS(L)1 29/2.2	1	1	26	2	1	1	1	29	1	1	52	2	/	1	2	4	2	1	1	2	1	2	29	1	1	1	1	2	/	1	1

Pump Type	N°																								
	120-1	120-3	120-6	120-11*	120-13	128-1	128-5	128-6	130-1	130-2	131-1	135-1	135-6	137-1	140	160	162	212	212-1	212-2	219*	245	273-1	615**
EVMS(L)1 2/0.37	4	4	4	4	4	4	4	4	3	4	1	4	4	1	2	1	1	1	2	1	2	2	2	2
EVMS(L)1 3/0.37	4	4	4	4	4	4	4	4	3	4	1	4	4	1	2	1	1	1	2	1	2	2	2	2
EVMS(L)1 4/0.37	4	4	4	4	4	4	4	4	3	4	1	4	4	1	2	1	1	1	2	1	2	2	2	2
EVMS(L)1 5/0.37	4	4	4	4	4	4	4	4	3	4	1	4	4	1	2	1	1	1	2	1	2	2	2	2
EVMS(L)1 6/0.55	4	4	4	4	4	4	4	4	3	4	1	4	4	1	2	1	1	1	2	1	2	2	2	2
EVMS(L)1 7/0.55	4	4	4	4	4	4	4	4	3	4	1	4	4	1	2	1	1	1	2	1	2	2	2	2
EVMS(L)1 8/0.75	4	4	4	4	4	4	4	4	3	4	1	4	4	1	2	1	1	1	2	1	2	2	2	2
EVMS(L)1 9/0.75	4	4	4	4	4	4	4	4	3	4	1	4	4	1	2	1	1	1	2	1	2	2	2	2
EVMS(L)1 10/0.75	4	4	4	4	4	4	4	4	3	4	1	4	4	1	2	1	1	1	2	1	2	2	2	2
EVMS(L)1 11/1.1	4	4	4	4	4	4	4	4	3	4	1	4	4	1	2	1	1	1	2	1	2	2	2	2
EVMS(L)1 12/1.1	4	4	4	4	4	4	4	4	3	4	1	4	4	1	2	1	1	1	2	1	2	2	2	2
EVMS(L)1 13/1.1	4	4	4	4	4	4	4	4	3	4	1	4	4	1	2	1	1	1	2	1	2	2	2	2
EVMS(L)1 14/1.1	4	4	4	4	4	4	4	4	3	4	1	4	4	1	2	1	1	1	2	1	2	2	2	2
EVMS(L)1 16/1.5	4	4	4	4	4	4	4	4	3	4	1	4	4	1	2	1	1	1	2	1	2	2	2	2
EVMS(L)1 18/1.5	4	4	4	4	4	4	4	4	3	4	1	4	4	1	2	1	1	1	2	1	2	2	2	2
EVMS(L)1 20/1.5	4	4	4	/	4	4	4	4	3	4	1	4	4	1	2	1	1	1	2	1	/	2	2	2
EVMS(L)1 22/2.2	4	4	4	/	4	4	4	4	3	4	1	4	4	1	2	1	1	1	2	1	/	2	2	2
EVMS(L)1 24/2.2	4	4	4	/	4	4	4	4	3	4	1	4	4	1	2	1	1	1	2	1	/	2	2	2
EVMS(L)1 26/2.2	4	4	4	/	4	4	4	4	3	4	1	4	4	1	2	1	1	1	2	1	/	2	2	2
EVMS(L)1 27/2.2	4	4	4	/	4	4	4	4	3	4	1	4	4	1	2	1	1	1	2	1	/	2	2	2
EVMS(L)1 29/2.2	4	4	4	/	4	4	4	4	3	4	1	4	4	1	2	1	1	1	2	1	/	2	2	2

* only for Oval flange (N)
** only for Loose round flange (LF)

EBARA Pumps Europe reserves the right to make changes without prior notice

PERFORMANCE CURVE
EVMSG1

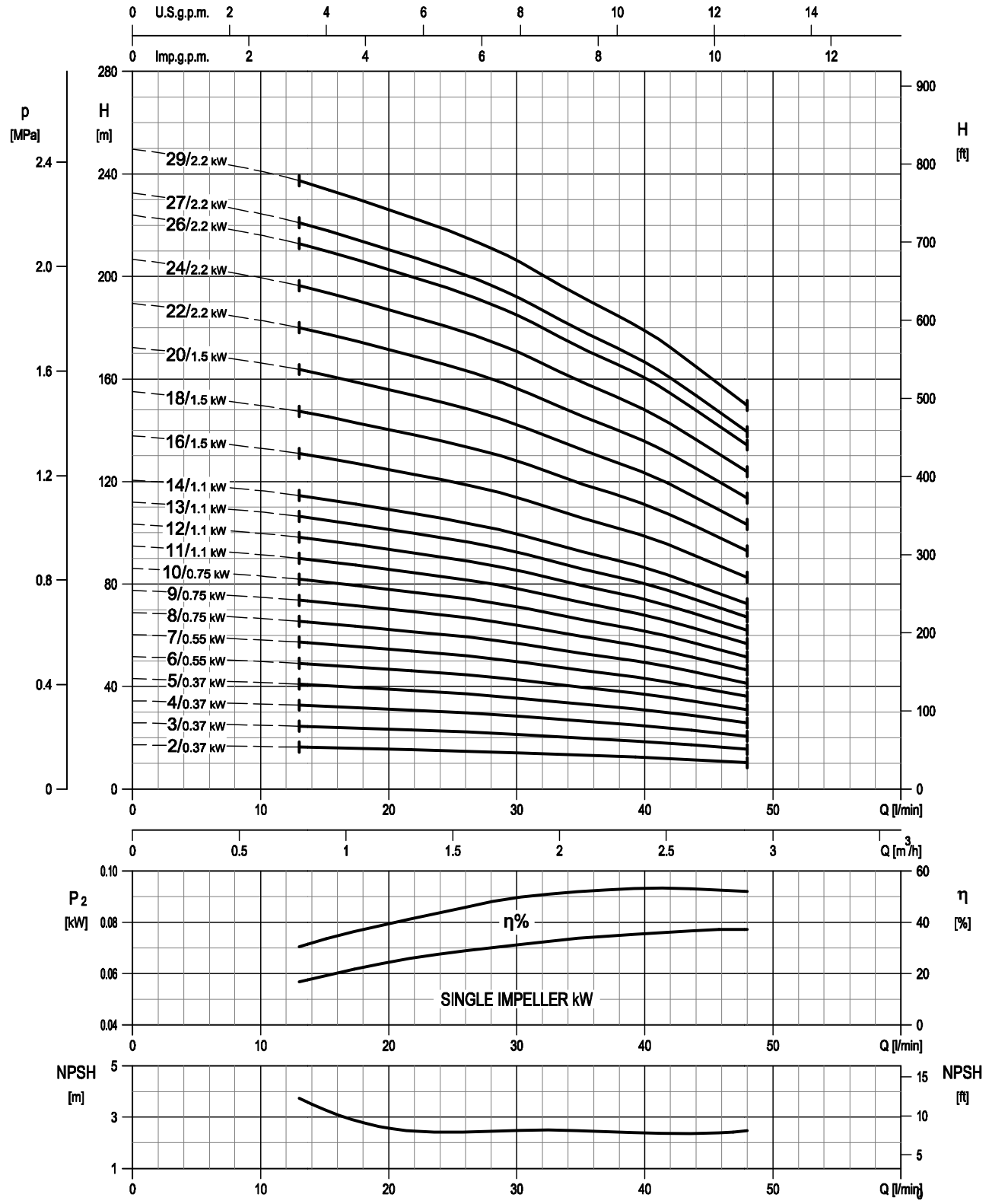

Rotation speed ≈3500 min-1
Test standard: ISO 9906:2012 - Grade 3B

EBARA Pumps Europe reserves the right to make changes without prior notice

TECHNICAL DATA
EVMSG1

Dimensional sketch

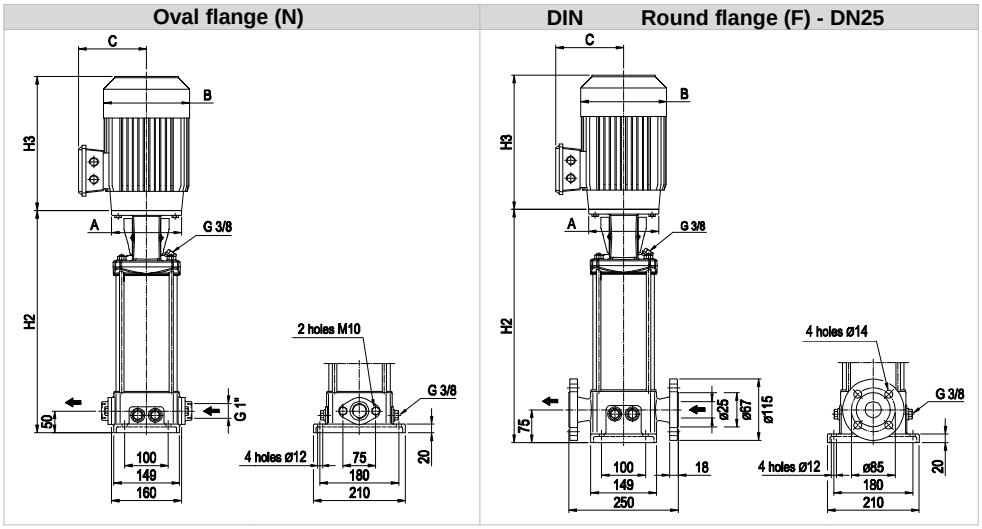

Dimensions [mm] and Weights [Kg]

Pump Type	Pmax [MPa]	Motor kW	Size	A	3 ~ B	C	H3	Oval flange (N) H2	Weight Pump	Weight Pump + Motor	Round flange (F) H2	Weight Pump	Weight Pump + Motor
EVMSG1 2/0.37	1.6	0.37	71	ø105	139	114	216	250	14.3	20.1	275	17.7	23.5
EVMSG1 3/0.37	1.6	0.37	71	ø105	139	114	216	271	14.7	20.5	296	18.1	23.9
EVMSG1 4/0.37	1.6	0.37	71	ø105	139	114	216	292	15.1	20.9	317	18.5	24.3
EVMSG1 5/0.37	1.6	0.37	71	ø105	139	114	216	313	15.6	21.4	338	19	24.8
EVMSG1 6/0.55	1.6	0.55	71	ø105	139	114	216	334	16	22.2	359	19.4	25.6
EVMSG1 7/0.55	1.6	0.55	71	ø105	160	139	232	355	16.7	22.9	380	20.1	26.3
EVMSG1 8/0.75	1.6	0.75	80	ø120	160	139	232	386	17.1	26.6	411	20.5	30.0
EVMSG1 9/0.75	1.6	0.75	80	ø120	160	139	232	407	17.6	27.1	432	21	30.5
EVMSG1 10/0.75	1.6	0.75	80	ø120	160	139	232	428	18	27.5	453	21.4	30.9
EVMSG1 11/1.1	1.6	1.1	80	ø120	160	139	232	449	18.4	29.5	474	21.8	32.9
EVMSG1 12/1.1	1.6	1.1	80	ø120	160	139	232	470	18.9	30	495	22.3	33.4
EVMSG1 13/1.1	1.6	1.1	80	ø120	160	139	232	491	19.6	30.7	516	23	34.1
EVMSG1 14/1.1	1.6	1.1	80	ø120	160	139	232	512	20	31.1	537	23.4	34.5
EVMSG1 16/1.5	1.6	1.5	90 S	ø140	180	148	267	564	21	34	589	24.4	37.1
EVMSG1 18/1.5	1.6	1.5	90 S	ø140	180	148	267	606	21.9	34.6	631	25.3	38.0
EVMSG1 20/1.5	2.5	1.5	90 S	ø140	180	148	267	-	-	-	673	26.2	38.9
EVMSG1 22/2.2	2.5	2.2	90 L	ø140	180	148	267	-	-	-	715	27.6	43.6
EVMSG1 24/2.2	2.5	2.2	90 L	ø140	180	148	267	-	-	-	757	28.6	44.6
EVMSG1 26/2.2	2.5	2.2	90 L	ø140	180	148	267	-	-	-	799	29.5	45.5
EVMSG1 27/2.2	2.5	2.2	90 L	ø140	180	148	267	-	-	-	820	30	46
EVMSG1 29/2.2	2.5	2.2	90 L	ø140	180	148	267	-	-	-	862	30.9	46.9

1.6 MPa=16 bar ; 2.5 MPa=25 bar
- not available model

EBARA Pumps Europe reserves the right to make changes without prior notice

SECTIONAL VIEW
EVMSG1

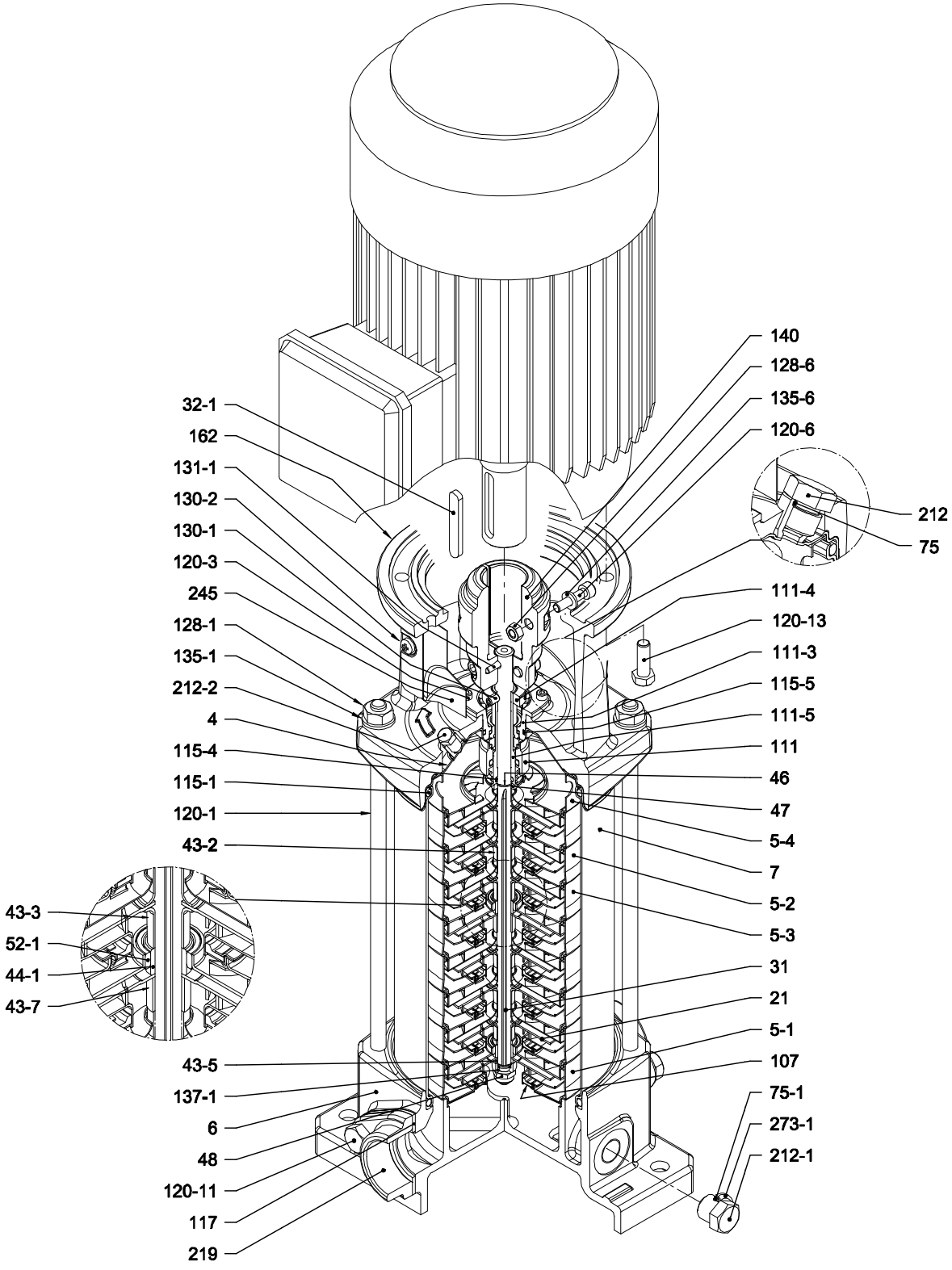

with Oval flange (N)

EBARA Pumps Europe reserves the right to make changes without prior notice

PIPE CONNECTION
EVMSG1

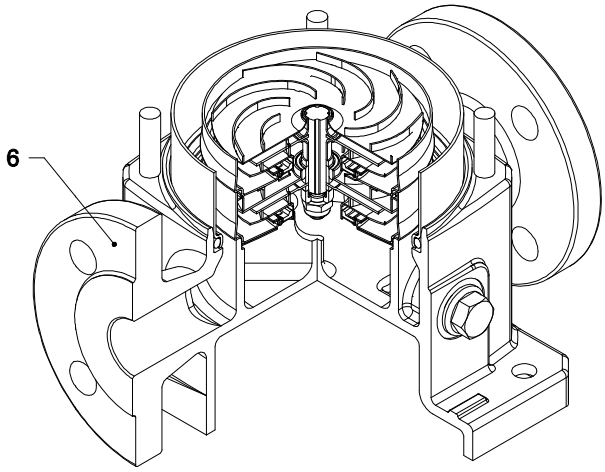

with Round flange (F)

EBARA Pumps Europe reserves the right to make changes without prior notice

SECTIONAL TABLE
EVMSG1

N°	PART NAME		MATERIAL EVMSG	DIMENSIONS	STANDARD
4	Casing cover		EN 1.4301 (AISI 304)		
5-1	Suction casing		EN 1.4301 (AISI 304)		
5-2	Intermediate Casing		EN 1.4301 (AISI 304)		
5-3	Intermediate casing bearing		EN 1.4301 (AISI 304)		
5-4	Discharge casing		EN 1.4301 (AISI 304)		
6	Bottom casing		Cast Iron EN GJL-250-EN1561		
7	Outer casing		EN 1.4301 (AISI 304)		
21	Impeller		EN 1.4301 (AISI 304)		
31	Shaft		EN 1.4301 (AISI 304)		
32-1	Adjuster Key		EN 1.4301 (AISI 304)		
43-2	Shaft sleeve (intermediate)		EN 1.4301 (AISI 304)		
43-3	Shaft sleeve (bearing)		EN 1.4301 (AISI 304)		
43-5	Shaft sleeve (last stage)		EN 1.4301 (AISI 304)		
43-7	Spacer		EN 1.4301 (AISI 304)		
44-1	Shaft sleeve bearing		Tungsten carbide		
46	Ring (mechanical seal)		EN 1.4301 (AISI 304)		
47	Ring Holder		EN 1.4301 (AISI 304)		
48	Impeller nut		A2-70 UNI 7323 with inox insert	M8	
52-1	Bearing		Tungsten carbide		
75	O-Ring (plug)		EPDM	D. 12.37x2.62	OR 3050
75-1	O-Ring (plug)		EPDM		
107	Liner ring		EN 1.4301 (AISI 304) + PPS		
111	Mechanical Seal		SiC/Carbon/EPDM		
111-3	Mechanical seal seat		EN 1.4301 (AISI 304)		
111-4	Seal holder		EN 1.4301 (AISI 304)		
111-5	Mechanical seal cartridge		EN 1.4301 (AISI 304)		
115-1	O-Ring (outer casing)		EPDM	D. 129.54x5.34	OR 6510
115-4	O-Ring (cartridge sleeve)		EPDM	D. 11.91x2.62	OR 115
115-5	O-Ring (seal cover)		EPDM	D. 32.99x2.62	OR 3131
117	Flange gasket		EPDM		
120-1	Tie-rod		Galvanized steel 6.8 strenght class ISO 898/1	M10	
120-3	Screw		A2-70 UNI 7323	M4x10	ISO 4762
120-6	Screw for coupling		Galvanized steel	M6x25	ISO 4762
120-11	Screw for counterflange		A2-70 UNI 7323		
120-13	Screw for motor	MEC 71-80	Galvanized steel 8.8 strenght class ISO 898/1	M6x20	ISO 4017
		MEC 90		M8x20	ISO 4017
128-1	Nut for tie rod		Galvanized steel	M10	UNI 5588
128-6	Nut for coupling		Galvanized steel	M6	ISO 4032
130-1	Set screw		A2-70 UNI 7323	M5x8	UNI 5923
130-2	Screw for coupling guard		A2-70 UNI 7323	M5x6	UNI 7687
131-1	Pin for shaft		Carbon Steel	D. 4x32	UNI 4838
135-1	Washer		Galvanized steel	D. 10.5x21x2	UNI 6592
135-6	Washer		Carbon Steel	Ø6	
137-1	Impeller spacer		EN 1.4301 (AISI 304)		
140	Coupling	up to 4.0 kW	Die cast Aluminium EN AB-AISI11Cu2 (Fe)		
162	Motor bracket		Cast iron EN-GJL-200-EN 1561		
212	Plug		EN 1.4301 (AISI 304)	G 3/8	
212-1	Plug		EN 1.4301 (AISI 304)	G 3/8	
212-2	Venting plug		EN 1.4404 (AISI 316L)		
219	Counter flange		Galvanized steel		
245	Coupling guard		EN 1.4301 (AISI 304)		
273-1	Plug Washer		EN 1.4301 (AISI 304)		

EBARA Pumps Europe reserves the right to make changes without prior notice

QUANTITY FOR MODEL EVMSG1

Pump Type	N°																												
	4	5-1	5-2	5-3	5-4	6	7	21	31	32-1	43-2	43-3	43-5	43-7	44-1	46	47	48	52-1	75	75-1	107	111	111-3	111-4	111-5	115-1	115-4	115-5
EVMSG1 2/0.37	1	1	/	1	1	1	1	2	1	1	/	1	/	/	1	2	1	1	1	1	4	2	1	1	1	1	2	1	1
EVMSG1 3/0.37	1	1	1	1	1	1	1	3	1	1	3	1	/	/	1	2	1	1	1	1	4	3	1	1	1	1	2	1	1
EVMSG1 4/0.37	1	1	2	1	1	1	1	4	1	1	5	1	/	/	1	2	1	1	1	1	4	4	1	1	1	1	2	1	1
EVMSG1 5/0.37	1	1	3	1	1	1	1	5	1	1	7	1	1	/	1	2	1	1	1	1	4	5	1	1	1	1	2	1	1
EVMSG1 6/0.55	1	1	4	1	1	1	1	6	1	1	9	1	/	/	1	2	1	1	1	1	4	6	1	1	1	1	2	1	1
EVMSG1 7/0.55	1	1	5	1	1	1	1	7	1	1	11	1	/	/	1	2	1	1	1	1	4	7	1	1	1	1	2	1	1
EVMSG1 8/0.75	1	1	6	1	1	1	1	8	1	1	13	1	/	/	1	2	1	1	1	1	4	8	1	1	1	1	2	1	1
EVMSG1 9/0.75	1	1	7	1	1	1	1	9	1	1	15	1	1	/	1	2	1	1	1	1	4	9	1	1	1	1	2	1	1
EVMSG1 10/0.75	1	1	8	1	1	1	1	10	1	1	17	1	/	/	1	2	1	1	1	1	4	10	1	1	1	1	2	1	1
EVMSG1 11/1.1	1	1	9	1	1	1	1	11	1	1	19	1	/	/	1	2	1	1	1	1	4	11	1	1	1	1	2	1	1
EVMSG1 12/1.1	1	1	10	1	1	1	1	12	1	1	21	1	/	/	1	2	1	1	1	1	4	12	1	1	1	1	2	1	1
EVMSG1 13/1.1	1	1	10	2	1	1	1	13	1	1	20	2	1	1	2	2	1	1	2	1	4	13	1	1	1	1	2	1	1
EVMSG1 14/1.1	1	1	11	2	1	1	1	14	1	1	22	2	/	1	2	2	1	1	2	1	4	14	1	1	1	1	2	1	1
EVMSG1 16/1.5	1	1	13	2	1	1	1	16	1	1	26	2	/	1	2	2	1	1	2	1	4	16	1	1	1	1	2	1	1
EVMSG1 18/1.5	1	1	15	2	1	1	1	18	1	1	30	2	/	1	2	2	1	1	2	1	4	18	1	1	1	1	2	1	1
EVMSG1 20/1.5	1	1	17	2	1	1	1	20	1	1	34	2	/	1	2	2	1	1	2	1	4	20	1	1	1	1	2	1	1
EVMSG1 22/2.2	1	1	19	2	1	1	1	22	1	1	38	2	/	1	2	2	1	1	2	1	4	22	1	1	1	1	2	1	1
EVMSG1 24/2.2	1	1	21	2	1	1	1	24	1	1	42	2	/	1	2	2	1	1	2	1	4	24	1	1	1	1	2	1	1
EVMSG1 26/2.2	1	1	23	2	1	1	1	26	1	1	46	2	/	1	2	2	1	1	2	1	4	26	1	1	1	1	2	1	1
EVMSG1 27/2.2	1	1	24	2	1	1	1	27	1	1	48	2	/	1	2	2	1	1	2	1	4	27	1	1	1	1	2	1	1
EVMSG1 29/2.2	1	1	26	2	1	1	1	29	1	1	52	2	/	1	2	2	1	1	2	1	4	29	1	1	1	1	2	1	1

Pump Type	N°																							
	117*	120-1	120-3	120-6	120-11*	120-13	128-1	128-6	130-1	130-2	131-1	135-1	135-6	137-1	140	162	212	212-1	212-2	219*	245	273-1
EVMSG1 2/0.37	2	4	4	4	4	4	4	4	3	4	1	4	4	1	2	1	1	4	1	2	2	4
EVMSG1 3/0.37	2	4	4	4	4	4	4	4	3	4	1	4	4	1	2	1	1	4	1	2	2	4
EVMSG1 4/0.37	2	4	4	4	4	4	4	4	3	4	1	4	4	1	2	1	1	4	1	2	2	4
EVMSG1 5/0.37	2	4	4	4	4	4	4	4	3	4	1	4	4	1	2	1	1	4	1	2	2	4
EVMSG1 6/0.55	2	4	4	4	4	4	4	4	3	4	1	4	4	1	2	1	1	4	1	2	2	4
EVMSG1 7/0.55	2	4	4	4	4	4	4	4	3	4	1	4	4	1	2	1	1	4	1	2	2	4
EVMSG1 8/0.75	2	4	4	4	4	4	4	4	3	4	1	4	4	1	2	1	1	4	1	2	2	4
EVMSG1 9/0.75	2	4	4	4	4	4	4	4	3	4	1	4	4	1	2	1	1	4	1	2	2	4
EVMSG1 10/0.75	2	4	4	4	4	4	4	4	3	4	1	4	4	1	2	1	1	4	1	2	2	4
EVMSG1 11/1.1	2	4	4	4	4	4	4	4	3	4	1	4	4	1	2	1	1	4	1	2	2	4
EVMSG1 12/1.1	2	4	4	4	4	4	4	4	3	4	1	4	4	1	2	1	1	4	1	2	2	4
EVMSG1 13/1.1	2	4	4	4	4	4	4	4	3	4	1	4	4	1	2	1	1	4	1	2	2	4
EVMSG1 14/1.1	2	4	4	4	4	4	4	4	3	4	1	4	4	1	2	1	1	4	1	2	2	4
EVMSG1 16/1.5	2	4	4	4	4	4	4	4	3	4	1	4	4	1	2	1	1	4	1	2	2	4
EVMSG1 18/1.5	2	4	4	4	4	4	4	4	3	4	1	4	4	1	2	1	1	4	1	2	2	4
EVMSG1 20/1.5	/	4	4	4	/	4	4	4	3	4	1	4	4	1	2	1	1	4	1	/	2	4
EVMSG1 22/2.2	/	4	4	4	/	4	4	4	3	4	1	4	4	1	2	1	1	4	1	/	2	4
EVMSG1 24/2.2	/	4	4	4	/	4	4	4	3	4	1	4	4	1	2	1	1	4	1	/	2	4
EVMSG1 26/2.2	/	4	4	4	/	4	4	4	3	4	1	4	4	1	2	1	1	4	1	/	2	4
EVMSG1 27/2.2	/	4	4	4	/	4	4	4	3	4	1	4	4	1	2	1	1	4	1	/	2	4
EVMSG1 29/2.2	/	4	4	4	/	4	4	4	3	4	1	4	4	1	2	1	1	4	1	/	2	4

* only for Oval flange (N)

EBARA Pumps Europe reserves the right to make changes without prior notice

VERTICAL MULTISTAGE PUMPS EVMS

PERFORMANCE CURVE
EVMS(L)3

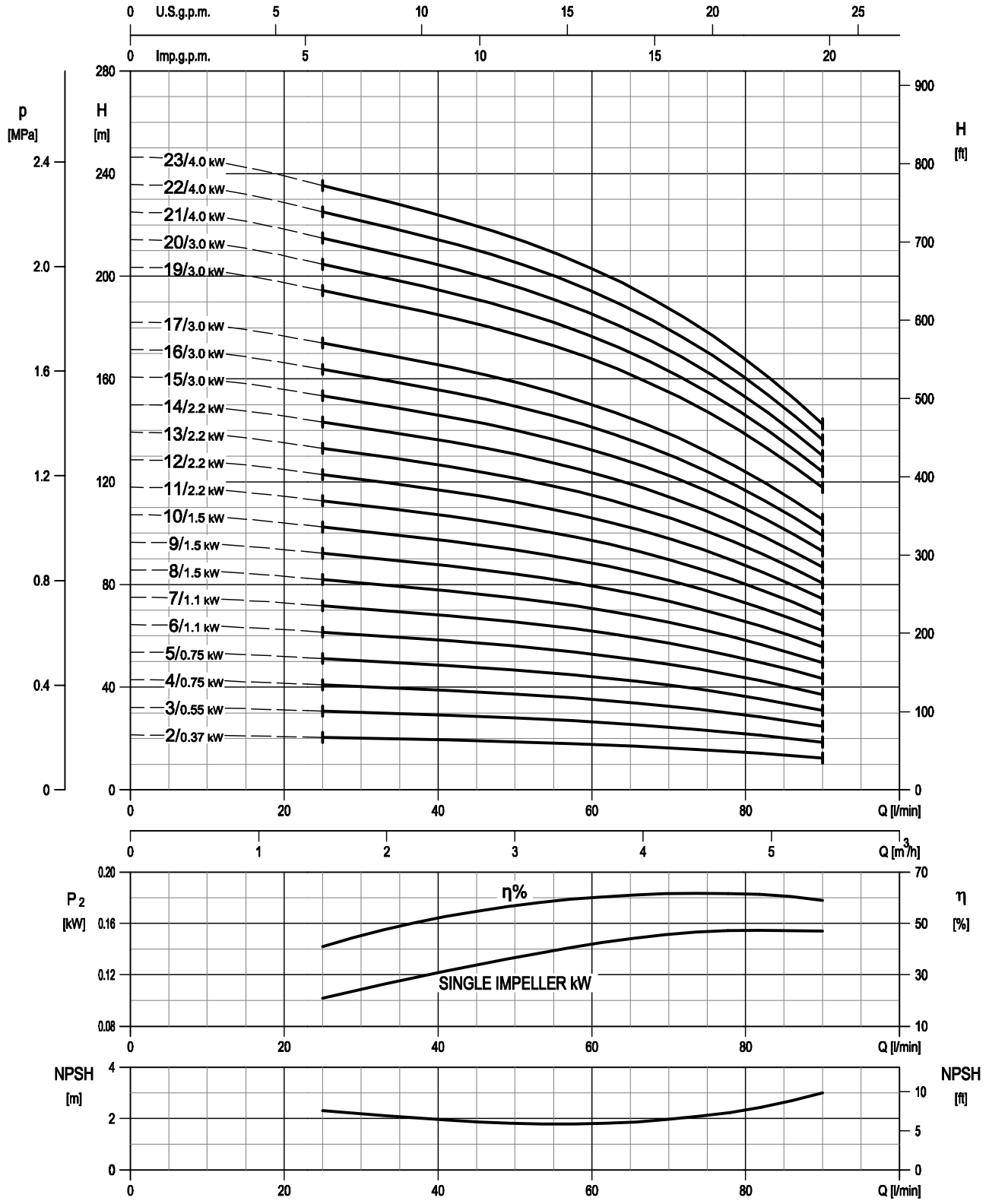

Rotation speed ≈3500 min-1
Test standard: ISO 9906:2012 - Grade 3B

EBARA Pumps Europe reserves the right to make changes without prior notice

TECHNICAL DATA
EVMS(L)3

Dimensional sketch

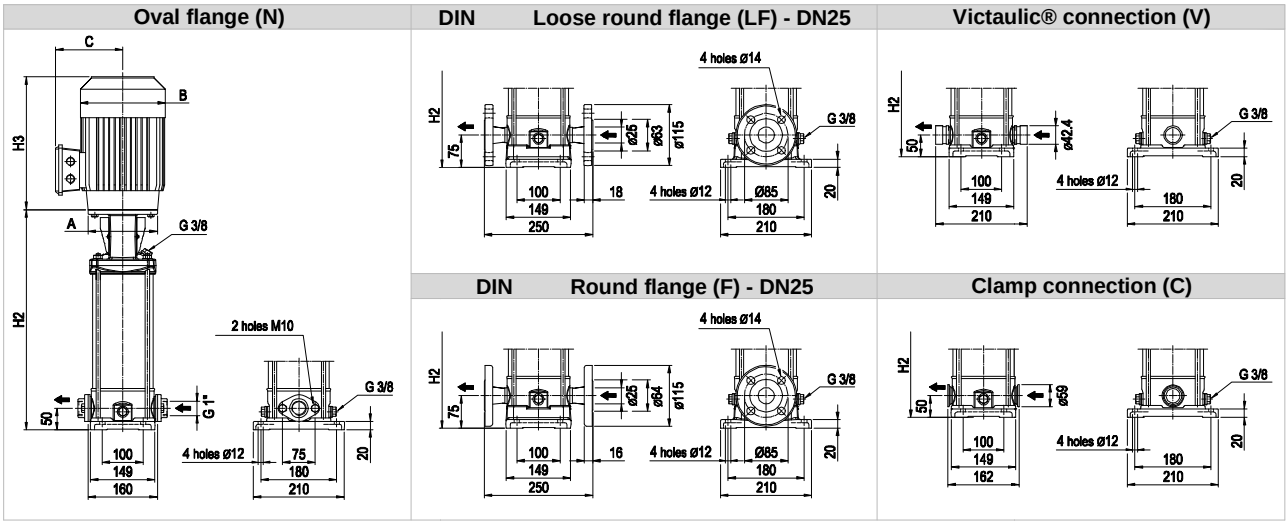

Dimensions [mm] and Weights [Kg]

Pump Type	Pmax [MPa]	Motor kW	Motor Size	Motor A	Motor 3 ~ B	Motor 3 ~ C	Motor 3 ~ H3	Oval flange (N) H2	Oval flange (N) Weight Pump	Oval flange (N) Weight Pump + Motor	Loose round flange (LF) Round flange (F) H2	Loose round flange (LF) Round flange (F) Weight Pump	Loose round flange (LF) Round flange (F) Weight Pump + Motor	Victaulic® connection (V) Clamp connection (C) H2	Victaulic® connection (V) Clamp connection (C) Weight Pump	Victaulic® connection (V) Clamp connection (C) Weight Pump + Motor
EVMS(L)3 2/0.37	1.6	0.37	71	ø105	139	114	216	250	9.9	15.7	275	10.6	16.4	250	9.8	15.6
EVMS(L)3 3/0.55	1.6	0.55	71	ø105	139	114	216	271	10.3	16.5	296	11	17.2	271	10.3	16.5
EVMS(L)3 4/0.75	1.6	0.75	80	ø120	160	139	232	302	11	20.5	327	11.6	21.1	302	10.9	20.4
EVMS(L)3 5/0.75	1.6	0.75	80	ø120	160	139	232	323	11.4	20.9	348	12.1	21.6	323	11.3	20.8
EVMS(L)3 6/1.1	1.6	1.1	80	ø120	160	139	232	344	11.8	22.9	369	12.5	23.6	344	11.7	22.8
EVMS(L)3 7/1.1	1.6	1.1	80	ø120	160	139	232	365	12.2	23.3	390	12.9	24	365	12.2	23.3
EVMS(L)3 8/1.5	1.6	1.5	90 S	ø140	180	148	267	396	12.7	26.7	421	13.3	27.3	396	12.6	26.6
EVMS(L)3 9/1.5	1.6	1.5	90 S	ø140	180	148	267	417	13.1	27.1	442	13.7	27.7	417	13	27
EVMS(L)3 10/1.5	1.6	1.5	90 S	ø140	180	148	267	438	13.5	27.5	463	14.2	28.2	438	13.4	27.4
EVMS(L)3 11/2.2	1.6	2.2	90 L	ø140	180	148	267	459	13.9	29.9	484	14.6	30.6	459	13.8	29.8
EVMS(L)3 12/2.2	1.6	2.2	90 L	ø140	180	148	267	480	14.3	30.3	505	14.9	30.9	480	14.2	30.2
EVMS(L)3 13/2.2	1.6	2.2	90 L	ø140	180	148	267	501	15	31	526	15.7	31.7	501	15	31
EVMS(L)3 14/2.2	1.6	2.2	90 L	ø140	180	148	267	522	15.4	31.4	547	16.1	32.1	522	15.4	31.4
EVMS(L)3 15/3.0	1.6	3.0	100 L	ø160	196	155	306	553	16	38.8	578	16.6	39.4	553	15.9	38.7
EVMS(L)3 16/3.0	2.5	3.0	100 L	ø160	196	155	306	-	-	-	599	17.6	40.4	574	16.9	39.7
EVMS(L)3 17/3.0	2.5	3.0	100 L	ø160	196	155	306	-	-	-	620	18.1	40.9	595	17.3	40.1
EVMS(L)3 19/3.0	2.5	3.0	100 L	ø160	196	155	306	-	-	-	662	19	41.8	637	18.2	41
EVMS(L)3 20/3.0	2.5	3.0	100 L	ø160	196	155	306	-	-	-	683	19.4	42.2	658	18.7	41.5
EVMS(L)3 21/4.0	2.5	4.0	112 M	ø160	196	155	306	-	-	-	704	19.9	46.4	679	19.1	45.6
EVMS(L)3 22/4.0	2.5	4.0	112 M	ø160	196	155	306	-	-	-	725	20.3	46.8	700	19.6	46.1
EVMS(L)3 23/4.0	2.5	4.0	112 M	ø160	196	155	306	-	-	-	746	20.8	47.3	721	20	46.5

1.6 MPa=16 bar ; 2.5 MPa=25 bar
- not available model

EBARA Pumps Europe reserves the right to make changes without prior notice

SECTIONAL VIEW
EVMS(L)3

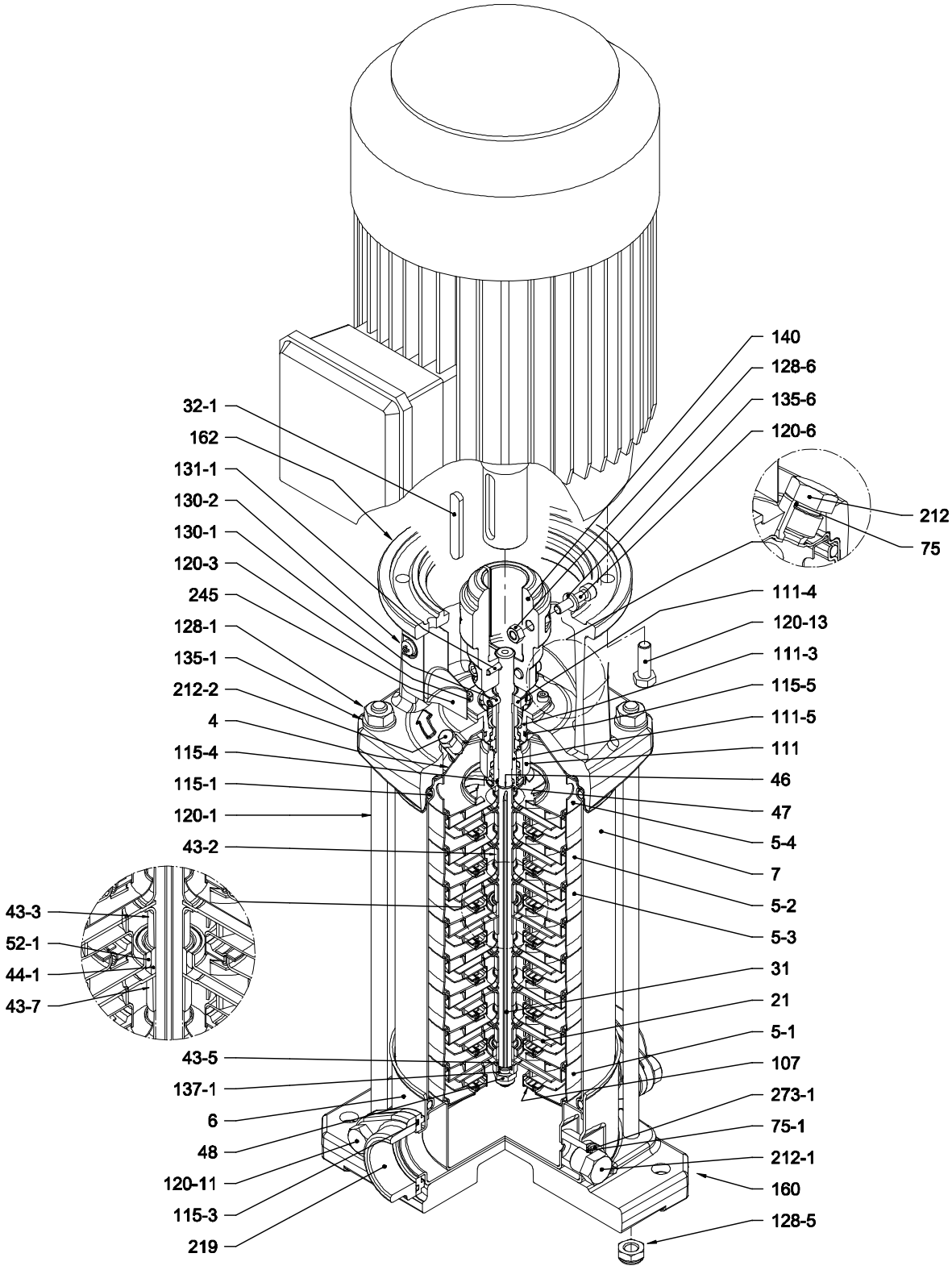

with Oval flange (N)

EBARA Pumps Europe reserves the right to make changes without prior notice

PIPE CONNECTION
EVMS(L)3

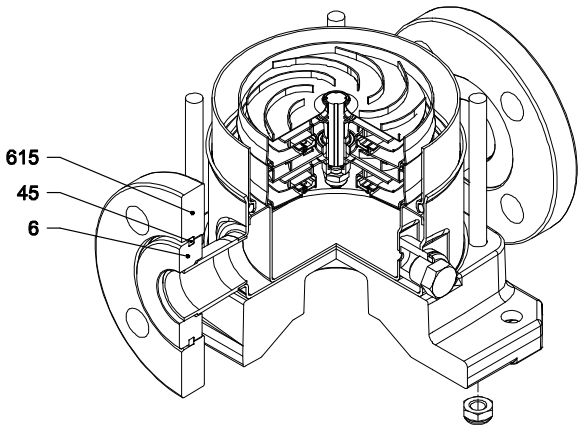

with Loose round flange (LF)

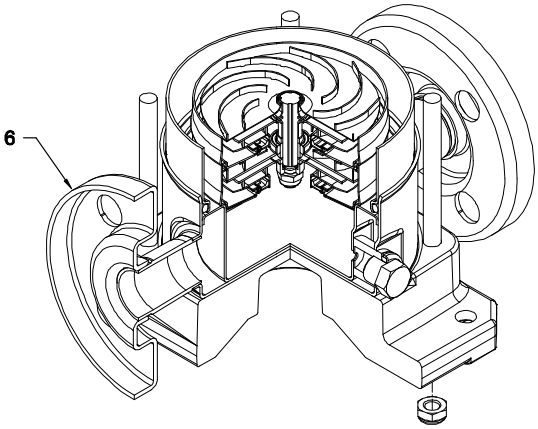

with Round flange (F)

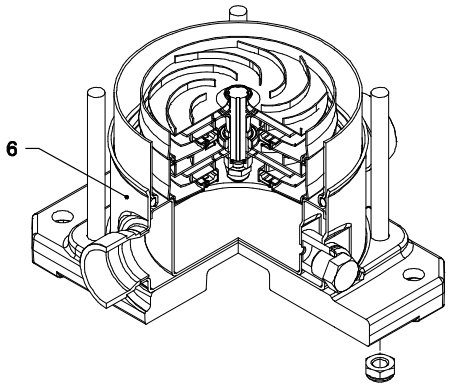

with Victaulic® connection (V)

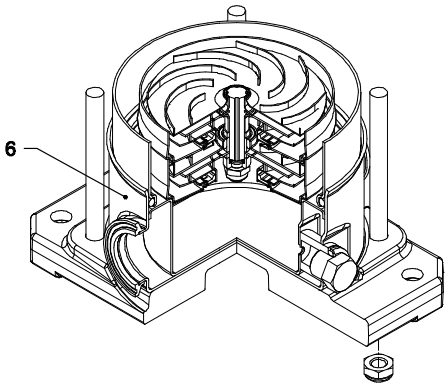

with Clamp connection (C)

EBARA Pumps Europe reserves the right to make changes without prior notice

SECTIONAL TABLE
EVMS(L)3

N°	PART NAME		MATERIAL EVMS	MATERIAL EVMSL	DIMENSIONS	STANDARD
4	Casing cover		EN 1.4301 (AISI 304)	EN 1.4401 (AISI 316)		
5-1	Suction casing		EN 1.4301 (AISI 304)	EN 1.4401 (AISI 316)		
5-2	Intermediate Casing		EN 1.4301 (AISI 304)	EN 1.4401 (AISI 316)		
5-3	Intermediate casing bearing		EN 1.4301 (AISI 304)	EN 1.4401 (AISI 316)		
5-4	Discharge casing		EN 1.4301 (AISI 304)	EN 1.4401 (AISI 316)		
6	Bottom casing		EN 1.4308 (AISI 304)	EN 1.4408 (AISI 316)		
7	Outer casing		EN 1.4301 (AISI 304)	EN 1.4404 (AISI 316L)		
21	Impeller		EN 1.4301 (AISI 304)	EN 1.4401 (AISI 316)		
31	Shaft		EN 1.4301 (AISI 304)	EN 1.4404 (AISI 316L)		
32-1	Adjuster Key		EN 1.4301 (AISI 304)			
43-2	Shaft sleeve (intermediate)		EN 1.4301 (AISI 304)	EN 1.4404 (AISI 316L)		
43-3	Shaft sleeve (bearing)		EN 1.4301 (AISI 304)	EN 1.4401 (AISI 316)		
43-5	Shaft sleeve (last stage)		EN 1.4301 (AISI 304)	EN 1.4401 (AISI 316)		
43-7	Spacer		EN 1.4301 (AISI 304)	EN 1.4404 (AISI 316L)		
44-1	Shaft sleeve bearing		Tungsten carbide			
45	Flange holder		EN 1.4301 (AISI 304)			
46	Ring (mechanical seal)		EN 1.4301 (AISI 304)	EN 1.4401 (AISI 316)		
47	Ring Holder		EN 1.4301 (AISI 304)	EN 1.4401 (AISI 316)		
48	Impeller nut		A2-70 UNI 7323 with inox insert	A4-70 UNI 7323 with inox insert	M8	
52-1	Bearing		Tungsten carbide			
75	O-Ring (plug)		EPDM		D. 12.37x2.62	OR 3050
75-1	O-Ring (plug)		EPDM			
107	Liner ring		EN 1.4301 (AISI 304) + PPS	EN 1.4401 (AISI 316) + PPS		
111	Mechanical Seal		SiC/Carbon/EPDM			
111-3	Mechanical seal seat		EN 1.4301 (AISI 304)	EN 1.4401 (AISI 316)		
111-4	Seal holder		EN 1.4301 (AISI 304)			
111-5	Mechanical seal cartridge		EN 1.4301 (AISI 304)	EN 1.4401 (AISI 316)		
115-1	O-Ring (outer casing)		EPDM		D. 129.54x5.34	OR 6510
115-3	O-Ring		EPDM			
115-4	O-Ring (cartridge sleeve)		EPDM		D. 11.91x2.62	OR 115
115-5	O-Ring (seal cover)		EPDM		D. 32.99x2.62	OR 3131
120-1	Tie-rod		Galvanized steel 6.8 strenght class ISO 898/1		M10	
120-3	Screw		A2-70 UNI 7323		M4x10	ISO 4762
120-6	Screw for coupling		Galvanized steel		M6x25	ISO 4762
120-11	Screw for counterflange		A2-70 UNI 7323			
120-13	Screw for motor	MEC 71-80	Galvanized steel 8.8 strenght class ISO 898/1		M6x20	ISO 4017
		MEC 90-100-112			M8x20	ISO 4017
128-1	Nut for tie rod		Galvanized steel		M10	UNI 5588
128-5	Nut for tie rod		A2-70 UNI 7323		M10	UNI 7474
128-6	Nut for coupling		Galvanized steel		M6	ISO 4032
130-1	Set screw		A2-70 UNI 7323		M5x8	UNI 5923
130-2	Screw for coupling guard		A2-70 UNI 7323		M5x6	UNI 7687
131-1	Pin for shaft		Carbon Steel		D. 4x32	UNI 4838
135-1	Washer		Galvanized steel		D. 10.5x21x2	UNI 6592
135-6	Washer		Carbon Steel		Ø6	
137-1	Impeller spacer		EN 1.4301 (AISI 304)	EN 1.4401 (AISI 316)		
140	Coupling	up to 4.0 kW	Die cast Aluminium EN AB-AISI11Cu2 (Fe)			
160	Base		Die cast Aluminium EN AB-AISI11Cu2 (Fe)			
162	Motor bracket		Cast iron EN-GJL-200-EN 1561			
212	Plug		EN 1.4301 (AISI 304)	EN 1.4401 (AISI 316)	G 3/8	
212-1	Plug		EN 1.4301 (AISI 304)	EN 1.4401 (AISI 316)	G 3/8	
212-2	Venting plug		EN 1.4404 (AISI 316L)			
219	Counter flange		EN 1.4301 (AISI 304)	EN 1.4401 (AISI 316)		
245	Coupling guard		EN 1.4301 (AISI 304)			
273-1	Plug Washer		EN 1.4301 (AISI 304)	EN 1.4401 (AISI 316)		
615	Flange		Nodular Cast Iron			

EBARA Pumps Europe reserves the right to make changes without prior notice

QUANTITY FOR MODEL EVMS(L)3

Pump Type	N°																														
	4	5-1	5-2	5-3	5-4	6	7	21	31	32-1	43-2	43-3	43-5	43-7	44-1	45**	46	47	48	52-1	75	75-1	107	111	111-3	111-4	111-5	115-1	115-3*	115-4	115-5
EVMS(L)3 2/0.37	1	1	/	1	1	1	1	2	1	1	/	1	/	/	1	4	2	1	1	1	1	4	2	1	1	1	1	2	2	1	1
EVMS(L)3 3/0.55	1	1	1	1	1	1	1	3	1	1	3	1	/	/	1	4	2	1	1	1	1	4	3	1	1	1	1	2	2	1	1
EVMS(L)3 4/0.75	1	1	2	1	1	1	1	4	1	1	5	1	/	/	1	4	2	1	1	1	1	4	4	1	1	1	1	2	2	1	1
EVMS(L)3 5/0.75	1	1	3	1	1	1	1	5	1	1	7	1	1	/	1	4	2	1	1	1	1	4	5	1	1	1	1	2	2	1	1
EVMS(L)3 6/1.1	1	1	4	1	1	1	1	6	1	1	9	1	/	/	1	4	2	1	1	1	1	4	6	1	1	1	1	2	2	1	1
EVMS(L)3 7/1.1	1	1	5	1	1	1	1	7	1	1	11	1	/	/	1	4	2	1	1	1	1	4	7	1	1	1	1	2	2	1	1
EVMS(L)3 8/1.5	1	1	6	1	1	1	1	8	1	1	13	1	/	/	1	4	2	1	1	1	1	4	8	1	1	1	1	2	2	1	1
EVMS(L)3 9/1.5	1	1	7	1	1	1	1	9	1	1	15	1	1	/	1	4	2	1	1	1	1	4	9	1	1	1	1	2	2	1	1
EVMS(L)3 10/1.5	1	1	8	1	1	1	1	10	1	1	17	1	/	/	1	4	2	1	1	1	1	4	10	1	1	1	1	2	2	1	1
EVMS(L)3 11/2.2	1	1	9	1	1	1	1	11	1	1	19	1	/	/	1	4	2	1	1	1	1	4	11	1	1	1	1	2	2	1	1
EVMS(L)3 12/2.2	1	1	10	1	1	1	1	12	1	1	21	1	/	/	1	4	2	1	1	1	1	4	12	1	1	1	1	2	2	1	1
EVMS(L)3 13/2.2	1	1	10	2	1	1	1	13	1	1	20	1	1	1	2	4	2	1	1	2	1	4	13	1	1	1	1	2	2	1	1
EVMS(L)3 14/2.2	1	1	11	2	1	1	1	14	1	1	22	1	/	1	2	4	2	1	1	2	1	4	14	1	1	1	1	2	2	1	1
EVMS(L)3 15/3.0	1	1	12	2	1	1	1	15	1	1	24	1	/	1	2	4	2	1	1	2	1	4	15	1	1	1	1	2	2	1	1
EVMS(L)3 16/3.0	1	1	13	2	1	1	1	16	1	1	26	1	/	1	2	4	2	1	1	2	1	4	16	1	1	1	1	2	/	1	1
EVMS(L)3 17/3.0	1	1	14	2	1	1	1	17	1	1	28	1	1	1	2	4	2	1	1	2	1	4	17	1	1	1	1	2	/	1	1
EVMS(L)3 19/3.0	1	1	16	2	1	1	1	19	1	1	32	1	/	1	2	4	2	1	1	2	1	4	19	1	1	1	1	2	/	1	1
EVMS(L)3 20/3.0	1	1	17	2	1	1	1	20	1	1	34	1	/	1	2	4	2	1	1	2	1	4	20	1	1	1	1	2	/	1	1
EVMS(L)3 21/4.0	1	1	18	2	1	1	1	21	1	1	36	1	1	1	2	4	2	1	1	2	1	4	21	1	1	1	1	2	/	1	1
EVMS(L)3 22/4.0	1	1	19	2	1	1	1	22	1	1	38	1	/	1	2	4	2	1	1	2	1	4	22	1	1	1	1	2	/	1	1
EVMS(L)3 23/4.0	1	1	20	2	1	1	1	23	1	1	40	1	/	1	2	4	2	1	1	2	1	4	23	1	1	1	1	2	/	1	1

Pump Type	N°																								
	120-1	120-3	120-6	120-11*	120-13	128-1	128-5	128-6	130-1	130-2	131-1	135-1	135-6	137-1	140	160	162	212	212-1	212-2	219*	245	273-1	615**
EVMS(L)3 2/0.37	4	4	4	4	4	4	4	4	3	4	1	4	4	1	2	1	1	1	2	1	2	2	2	2
EVMS(L)3 3/0.55	4	4	4	4	4	4	4	4	3	4	1	4	4	1	2	1	1	1	2	1	2	2	2	2
EVMS(L)3 4/0.75	4	4	4	4	4	4	4	4	3	4	1	4	4	1	2	1	1	1	2	1	2	2	2	2
EVMS(L)3 5/0.75	4	4	4	4	4	4	4	4	3	4	1	4	4	1	2	1	1	1	2	1	2	2	2	2
EVMS(L)3 6/1.1	4	4	4	4	4	4	4	4	3	4	1	4	4	1	2	1	1	1	2	1	2	2	2	2
EVMS(L)3 7/1.1	4	4	4	4	4	4	4	4	3	4	1	4	4	1	2	1	1	1	2	1	2	2	2	2
EVMS(L)3 8/1.5	4	4	4	4	4	4	4	4	3	4	1	4	4	1	2	1	1	1	2	1	2	2	2	2
EVMS(L)3 9/1.5	4	4	4	4	4	4	4	4	3	4	1	4	4	1	2	1	1	1	2	1	2	2	2	2
EVMS(L)3 10/1.5	4	4	4	4	4	4	4	4	3	4	1	4	4	1	2	1	1	1	2	1	2	2	2	2
EVMS(L)3 11/2.2	4	4	4	4	4	4	4	4	3	4	1	4	4	1	2	1	1	1	2	1	2	2	2	2
EVMS(L)3 12/2.2	4	4	4	4	4	4	4	4	3	4	1	4	4	1	2	1	1	1	2	1	2	2	2	2
EVMS(L)3 13/2.2	4	4	4	4	4	4	4	4	3	4	1	4	4	1	2	1	1	1	2	1	2	2	2	2
EVMS(L)3 14/2.2	4	4	4	4	4	4	4	4	3	4	1	4	4	1	2	1	1	1	2	1	2	2	2	2
EVMS(L)3 15/3.0	4	4	4	4	4	4	4	4	3	4	1	4	4	1	2	1	1	1	2	1	2	2	2	2
EVMS(L)3 16/3.0	4	4	4	/	4	4	4	4	3	4	1	4	4	1	2	1	1	1	2	1	/	2	2	2
EVMS(L)3 17/3.0	4	4	4	/	4	4	4	4	3	4	1	4	4	1	2	1	1	1	2	1	/	2	2	2
EVMS(L)3 19/3.0	4	4	4	/	4	4	4	4	3	4	1	4	4	1	2	1	1	1	2	1	/	2	2	2
EVMS(L)3 20/3.0	4	4	4	/	4	4	4	4	3	4	1	4	4	1	2	1	1	1	2	1	/	2	2	2
EVMS(L)3 21/4.0	4	4	4	/	4	4	4	4	3	4	1	4	4	1	2	1	1	1	2	1	/	2	2	2
EVMS(L)3 22/4.0	4	4	4	/	4	4	4	4	3	4	1	4	4	1	2	1	1	1	2	1	/	2	2	2
EVMS(L)3 23/4.0	4	4	4	/	4	4	4	4	3	4	1	4	4	1	2	1	1	1	2	1	/	2	2	2

* only for Oval flange (N)

** only for Loose round flange (LF)

EBARA Pumps Europe reserves the right to make changes without prior notice

PERFORMANCE CURVE
EVMSG3

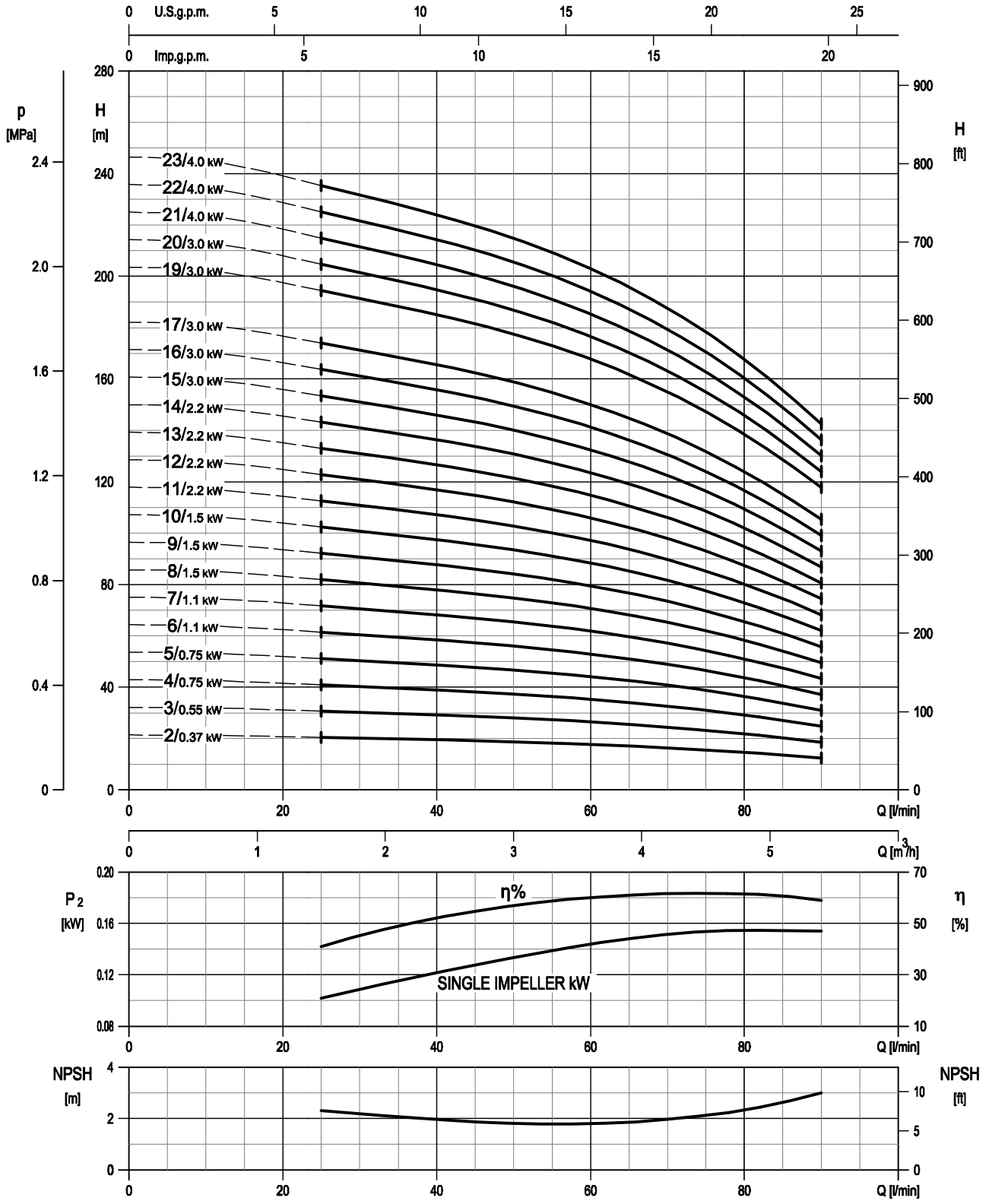

Rotation speed ≈3500 min-1
Test standard: ISO 9906:2012 - Grade 3B

EBARA Pumps Europe reserves the right to make changes without prior notice

TECHNICAL DATA
EVMSG3

Dimensional sketch

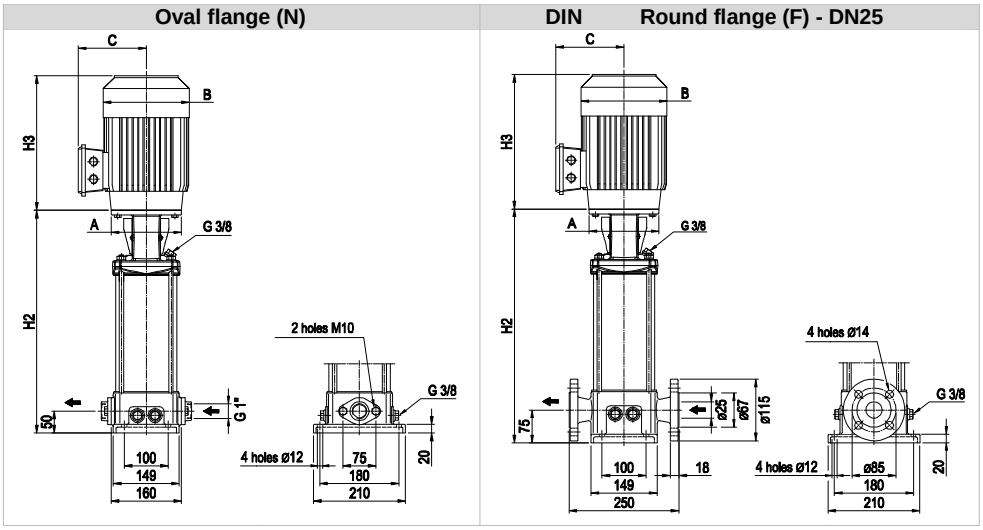

Dimensions [mm] and Weights [Kg]

Pump Type	Pmax [MPa]	Motor kW	Size	A	3 ~ B	C	H3	Oval flange (N) H2	Weight Pump	Weight Pump + Motor	Round flange (F) H2	Weight Pump	Weight Pump + Motor
EVMSG3 2/0.37	1.6	0.37	71	ø105	139	114	216	250	12.3	18.1	275	15.7	21.5
EVMSG3 3/0.55	1.6	0.55	71	ø105	139	114	216	271	12.7	18.9	296	16.1	22.3
EVMSG3 4/0.75	1.6	0.75	80	ø120	160	139	232	302	13.4	22.9	327	16.8	26.3
EVMSG3 5/0.75	1.6	0.75	80	ø120	160	139	232	323	13.8	23.3	348	17.2	26.7
EVMSG3 6/1.1	1.6	1.1	80	ø120	160	139	232	344	14.2	25.3	369	17.6	28.7
EVMSG3 7/1.1	1.6	1.1	80	ø120	160	139	232	365	14.6	25.7	390	18	29.1
EVMSG3 8/1.5	1.6	1.5	90 S	ø140	180	148	267	396	15	29	421	18.4	32.4
EVMSG3 9/1.5	1.6	1.5	90 S	ø140	180	148	267	417	15.5	29.5	442	18.9	32.9
EVMSG3 10/1.5	1.6	1.5	90 S	ø140	180	148	267	438	15.9	29.9	463	19.3	33.3
EVMSG3 11/2.2	1.6	2.2	90 L	ø140	180	148	267	459	16.3	32.3	484	19.7	35.7
EVMSG3 12/2.2	1.6	2.2	90 L	ø140	180	148	267	480	16.6	32.6	505	20	36
EVMSG3 13/2.2	1.6	2.2	90 L	ø140	180	148	267	501	17.4	33.4	526	20.8	36.8
EVMSG3 14/2.2	1.6	2.2	90 L	ø140	180	148	267	522	17.8	33.8	547	21.2	37.2
EVMSG3 15/3.0	1.6	3.0	100 L	ø160	196	155	306	553	18.3	41.1	578	21.7	44.5
EVMSG3 16/3.0	2.5	3.0	100 L	ø160	196	155	306	-	-	-	599	22.7	45.5
EVMSG3 17/3.0	2.5	3.0	100 L	ø160	196	155	306	-	-	-	620	23.2	46
EVMSG3 19/3.0	2.5	3.0	100 L	ø160	196	155	306	-	-	-	662	24.1	46.9
EVMSG3 20/3.0	2.5	3.0	100 L	ø160	196	155	306	-	-	-	683	24.5	47.3
EVMSG3 21/4.0	2.5	4.0	112 M	ø160	196	155	306	-	-	-	704	25	51.5
EVMSG3 22/4.0	2.5	4.0	112 M	ø160	196	155	306	-	-	-	725	25.4	51.9
EVMSG3 23/4.0	2.5	4.0	112 M	ø160	196	155	306	-	-	-	746	25.9	52.4

1.6 MPa=16 bar ; 2.5 MPa=25 bar
- not available model

EBARA Pumps Europe reserves the right to make changes without prior notice

SECTIONAL VIEW
EVMSG3

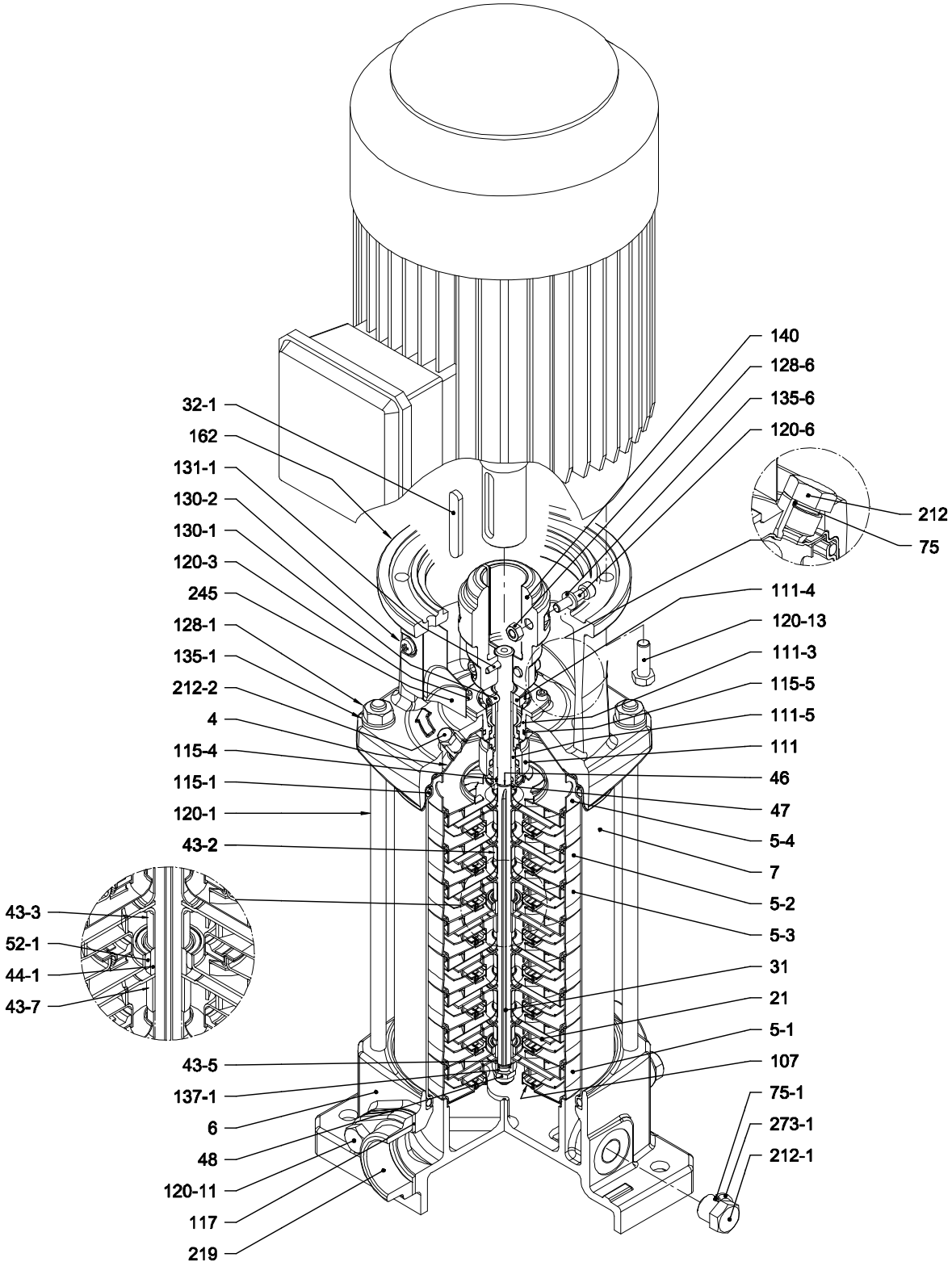

with Oval flange (N)

EBARA Pumps Europe reserves the right to make changes without prior notice

PIPE CONNECTION
EVMSG3

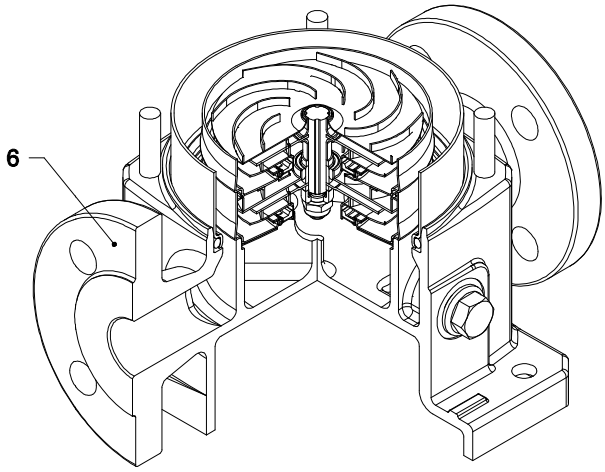

with Round flange (F)

EBARA Pumps Europe reserves the right to make changes without prior notice

SECTIONAL TABLE
EVMSG3

N°	PART NAME		MATERIAL EVMSG	DIMENSIONS	STANDARD
4	Casing cover		EN 1.4301 (AISI 304)		
5-1	Suction casing		EN 1.4301 (AISI 304)		
5-2	Intermediate Casing		EN 1.4301 (AISI 304)		
5-3	Intermediate casing bearing		EN 1.4301 (AISI 304)		
5-4	Discharge casing		EN 1.4301 (AISI 304)		
6	Bottom casing		Cast Iron EN GJL-250-EN1561		
7	Outer casing		EN 1.4301 (AISI 304)		
21	Impeller		EN 1.4301 (AISI 304)		
31	Shaft		EN 1.4301 (AISI 304)		
32-1	Adjuster Key		EN 1.4301 (AISI 304)		
43-2	Shaft sleeve (intermediate)		EN 1.4301 (AISI 304)		
43-3	Shaft sleeve (bearing)		EN 1.4301 (AISI 304)		
43-5	Shaft sleeve (last stage)		EN 1.4301 (AISI 304)		
43-7	Spacer		EN 1.4301 (AISI 304)		
44-1	Shaft sleeve bearing		Tungsten carbide		
46	Ring (mechanical seal)		EN 1.4301 (AISI 304)		
47	Ring Holder		EN 1.4301 (AISI 304)		
48	Impeller nut		A2-70 UNI 7323 with inox insert	M8	
52-1	Bearing		Tungsten carbide		
75	O-Ring (plug)		EPDM	D. 12.37x2.62	OR 3050
75-1	O-Ring (plug)		EPDM		
107	Liner ring		EN 1.4301 (AISI 304) + PPS		
111	Mechanical Seal		SiC/Carbon/EPDM		
111-3	Mechanical seal seat		EN 1.4301 (AISI 304)		
111-4	Seal holder		EN 1.4301 (AISI 304)		
111-5	Mechanical seal cartridge		EN 1.4301 (AISI 304)		
115-1	O-Ring (outer casing)		EPDM	D. 129.54x5.34	OR 6510
115-4	O-Ring (cartridge sleeve)		EPDM	D. 11.91x2.62	OR 115
115-5	O-Ring (seal cover)		EPDM	D. 32.99x2.62	OR 3131
117	Flange gasket		EPDM		
120-1	Tie-rod		Galvanized steel 6.8 strenght class ISO 898/1	M10	
120-3	Screw		A2-70 UNI 7323	M4x10	ISO 4762
120-6	Screw for coupling		Galvanized steel	M6x25	ISO 4762
120-11	Screw for counterflange		A2-70 UNI 7323		
120-13	Screw for motor	MEC 71-80	Galvanized steel 8.8 strenght class ISO 898/1	M6x20	ISO 4017
		MEC 90-100-112		M8x20	ISO 4017
128-1	Nut for tie rod		Galvanized steel	M10	UNI 5588
128-6	Nut for coupling		Galvanized steel	M6	ISO 4032
130-1	Set screw		A2-70 UNI 7323	M5x8	UNI 5923
130-2	Screw for coupling guard		A2-70 UNI 7323	M5x6	UNI 7687
131-1	Pin for shaft		Carbon Steel	D. 4x32	UNI 4838
135-1	Washer		Galvanized steel	D. 10.5x21x2	UNI 6592
135-6	Washer		Carbon Steel	Ø6	
137-1	Impeller spacer		EN 1.4301 (AISI 304)		
140	Coupling	up to 4.0 kW	Die cast Aluminium EN AB-AISI11Cu2 (Fe)		
162	Motor bracket		Cast iron EN-GJL-200-EN 1561		
212	Plug		EN 1.4301 (AISI 304)	G 3/8	
212-1	Plug		EN 1.4301 (AISI 304)	G 3/8	
212-2	Venting plug		EN 1.4404 (AISI 316L)		
219	Counter flange		Galvanized steel		
245	Coupling guard		EN 1.4301 (AISI 304)		
273-1	Plug Washer		EN 1.4301 (AISI 304)		

EBARA Pumps Europe reserves the right to make changes without prior notice

QUANTITY FOR MODEL EVMSG3

Pump Type	N°																											
	4	5-1	5-2	5-3	5-4	6	7	21	31	32-1	43-2	43-3	43-5	43-7	44-1	46	47	48	52-1	75	75-1	107	111	111-3	111-4	111-5	115-1	115-4	115-5
EVMSG3 2/0.37	1	1	/	1	1	1	1	2	1	1	/	1	/	/	1	2	1	1	1	1	4	2	1	1	1	1	2	1	1
EVMSG3 3/0.55	1	1	1	1	1	1	1	3	1	1	3	1	/	/	1	2	1	1	1	1	4	3	1	1	1	1	2	1	1
EVMSG3 4/0.75	1	1	2	1	1	1	1	4	1	1	5	1	/	/	1	2	1	1	1	1	4	4	1	1	1	1	2	1	1
EVMSG3 5/0.75	1	1	3	1	1	1	1	5	1	1	7	1	1	/	1	2	1	1	1	1	4	5	1	1	1	1	2	1	1
EVMSG3 6/1.1	1	1	4	1	1	1	1	6	1	1	9	1	/	/	1	2	1	1	1	1	4	6	1	1	1	1	2	1	1
EVMSG3 7/1.1	1	1	5	1	1	1	1	7	1	1	11	1	/	/	1	2	1	1	1	1	4	7	1	1	1	1	2	1	1
EVMSG3 8/1.5	1	1	6	1	1	1	1	8	1	1	13	1	/	/	1	2	1	1	1	1	4	8	1	1	1	1	2	1	1
EVMSG3 9/1.5	1	1	7	1	1	1	1	9	1	1	15	1	1	/	1	2	1	1	1	1	4	9	1	1	1	1	2	1	1
EVMSG3 10/1.5	1	1	8	1	1	1	1	10	1	1	17	1	/	/	1	2	1	1	1	1	4	10	1	1	1	1	2	1	1
EVMSG3 11/2.2	1	1	9	1	1	1	1	11	1	1	19	1	/	/	1	2	1	1	1	1	4	11	1	1	1	1	2	1	1
EVMSG3 12/2.2	1	1	10	1	1	1	1	12	1	1	21	1	/	/	1	2	1	1	1	1	4	12	1	1	1	1	2	1	1
EVMSG3 13/2.2	1	1	10	2	1	1	1	13	1	1	20	1	1	1	2	2	1	1	2	1	4	13	1	1	1	1	2	1	1
EVMSG3 14/2.2	1	1	11	2	1	1	1	14	1	1	22	1	/	1	2	2	1	1	2	1	4	14	1	1	1	1	2	1	1
EVMSG3 15/3.0	1	1	12	2	1	1	1	15	1	1	24	1	/	1	2	2	1	1	2	1	4	15	1	1	1	1	2	1	1
EVMSG3 16/3.0	1	1	13	2	1	1	1	16	1	1	26	1	/	1	2	2	1	1	2	1	4	16	1	1	1	1	2	1	1
EVMSG3 17/3.0	1	1	14	2	1	1	1	17	1	1	28	1	1	1	2	2	1	1	2	1	4	17	1	1	1	1	2	1	1
EVMSG3 19/3.0	1	1	16	2	1	1	1	19	1	1	32	1	/	1	2	2	1	1	2	1	4	19	1	1	1	1	2	1	1
EVMSG3 20/3.0	1	1	17	2	1	1	1	20	1	1	34	1	/	1	2	2	1	1	2	1	4	20	1	1	1	1	2	1	1
EVMSG3 21/4.0	1	1	18	2	1	1	1	21	1	1	36	1	1	1	2	2	1	1	2	1	4	21	1	1	1	1	2	1	1
EVMSG3 22/4.0	1	1	19	2	1	1	1	22	1	1	38	1	/	1	2	2	1	1	2	1	4	22	1	1	1	1	2	1	1
EVMSG3 23/4.0	1	1	20	2	1	1	1	23	1	1	40	1	/	1	2	2	1	1	2	1	4	23	1	1	1	1	2	1	1

Pump Type	N°																							
	117*	120-1	120-3	120-6	120-11*	120-13	128-1	128-6	130-1	130-2	131-1	135-1	135-6	137-1	140	162	212	212-1	212-2	219*	245	273-1
EVMSG3 2/0.37	2	4	4	4	4	4	4	4	3	4	1	4	4	1	2	1	1	4	1	2	2	4
EVMSG3 3/0.55	2	4	4	4	4	4	4	4	3	4	1	4	4	1	2	1	1	4	1	2	2	4
EVMSG3 4/0.75	2	4	4	4	4	4	4	4	3	4	1	4	4	1	2	1	1	4	1	2	2	4
EVMSG3 5/0.75	2	4	4	4	4	4	4	4	3	4	1	4	4	1	2	1	1	4	1	2	2	4
EVMSG3 6/1.1	2	4	4	4	4	4	4	4	3	4	1	4	4	1	2	1	1	4	1	2	2	4
EVMSG3 7/1.1	2	4	4	4	4	4	4	4	3	4	1	4	4	1	2	1	1	4	1	2	2	4
EVMSG3 8/1.5	2	4	4	4	4	4	4	4	3	4	1	4	4	1	2	1	1	4	1	2	2	4
EVMSG3 9/1.5	2	4	4	4	4	4	4	4	3	4	1	4	4	1	2	1	1	4	1	2	2	4
EVMSG3 10/1.5	2	4	4	4	4	4	4	4	3	4	1	4	4	1	2	1	1	4	1	2	2	4
EVMSG3 11/2.2	2	4	4	4	4	4	4	4	3	4	1	4	4	1	2	1	1	4	1	2	2	4
EVMSG3 12/2.2	2	4	4	4	4	4	4	4	3	4	1	4	4	1	2	1	1	4	1	2	2	4
EVMSG3 13/2.2	2	4	4	4	4	4	4	4	3	4	1	4	4	1	2	1	1	4	1	2	2	4
EVMSG3 14/2.2	2	4	4	4	4	4	4	4	3	4	1	4	4	1	2	1	1	4	1	2	2	4
EVMSG3 15/3.0	2	4	4	4	4	4	4	4	3	4	1	4	4	1	2	1	1	4	1	2	2	4
EVMSG3 16/3.0	/	4	4	4	/	4	4	4	3	4	1	4	4	1	2	1	1	4	1	/	2	4
EVMSG3 17/3.0	/	4	4	4	/	4	4	4	3	4	1	4	4	1	2	1	1	4	1	/	2	4
EVMSG3 19/3.0	/	4	4	4	/	4	4	4	3	4	1	4	4	1	2	1	1	4	1	/	2	4
EVMSG3 20/3.0	/	4	4	4	/	4	4	4	3	4	1	4	4	1	2	1	1	4	1	/	2	4
EVMSG3 21/4.0	/	4	4	4	/	4	4	4	3	4	1	4	4	1	2	1	1	4	1	/	2	4
EVMSG3 22/4.0	/	4	4	4	/	4	4	4	3	4	1	4	4	1	2	1	1	4	1	/	2	4
EVMSG3 23/4.0	/	4	4	4	/	4	4	4	3	4	1	4	4	1	2	1	1	4	1	/	2	4

* only for Oval flange (N)

EBARA Pumps Europe reserves the right to make changes without prior notice

PERFORMANCE CURVE
EVMS(L)5

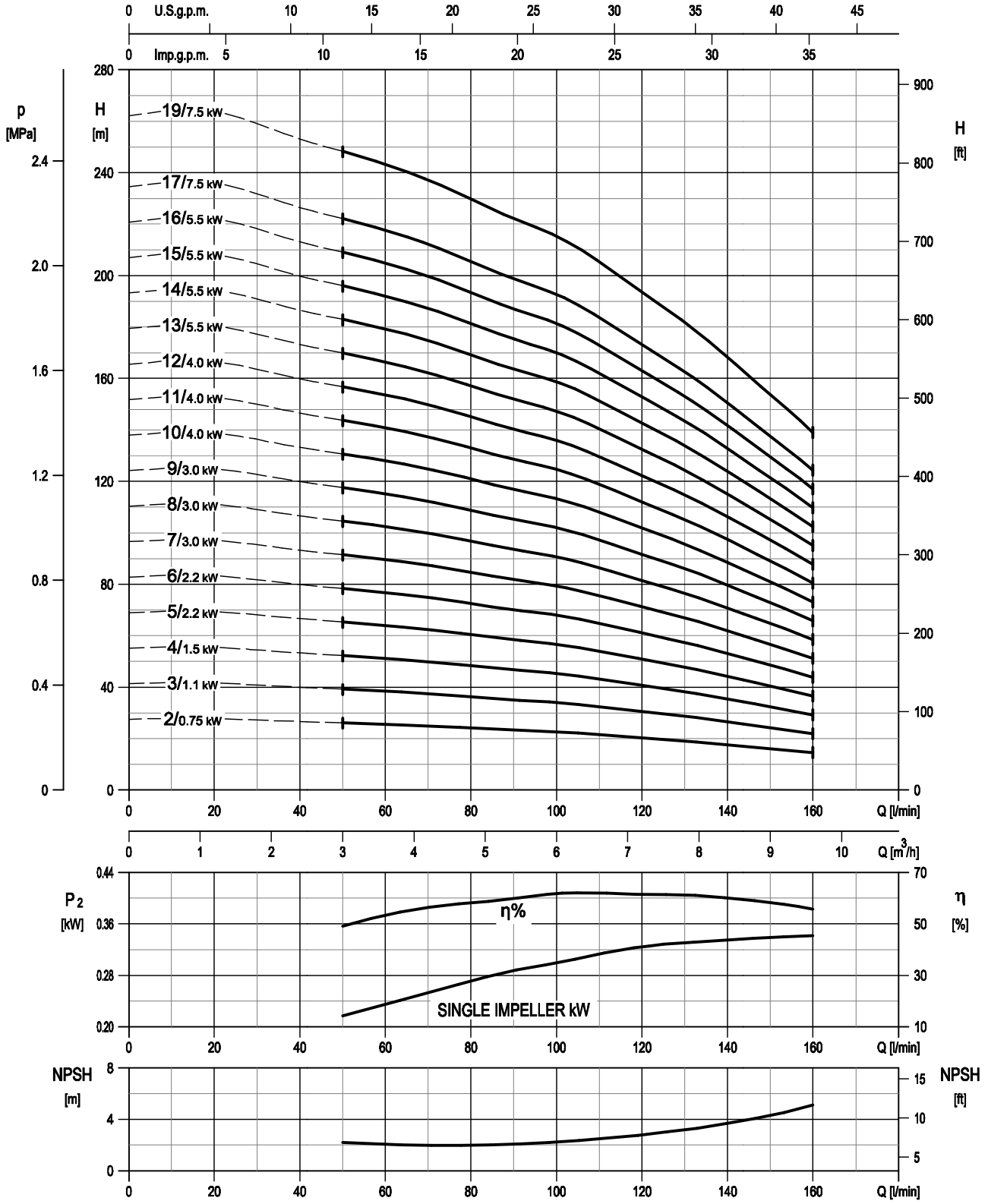

Rotation speed ≈3500 min-1
Test standard: ISO 9906:2012 - Grade 3B

EBARA Pumps Europe reserves the right to make changes without prior notice

TECHNICAL DATA
EVMS(L)5

Dimensional sketch

Oval flange (N)	DIN Loose round flange (LF) - DN32	Victaulic® connection (V)
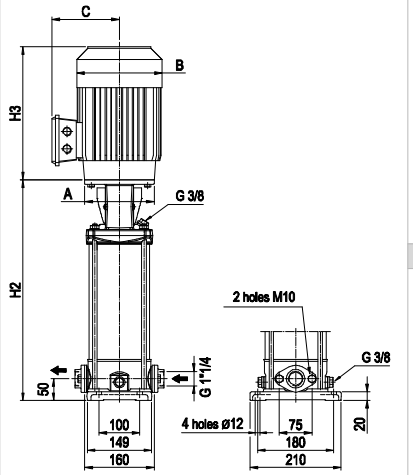	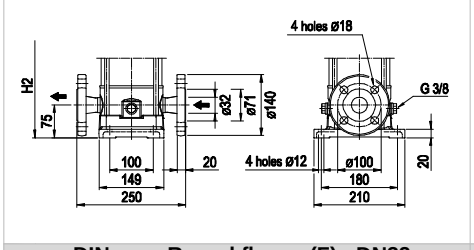	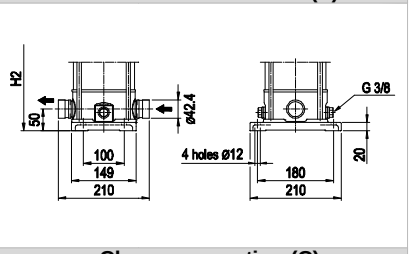
	DIN Round flange (F) - DN32	**Clamp connection (C)**
	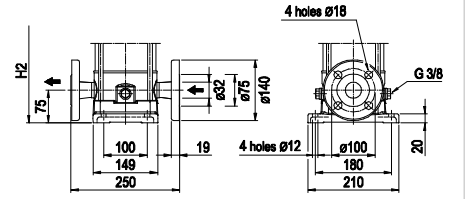	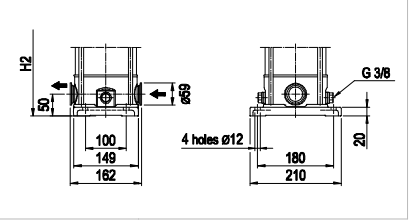

Dimensions [mm] and Weights [Kg]

Pump Type	Pmax [MPa]	Motor kW	Size	A	3 ~ B	C	H3	Oval flange (N) H2	Weight Pump	Weight Pump + Motor	Loose round flange (LF) Round flange (F) H2	Weight Pump	Weight Pump + Motor	Victaulic® connection (V) Clamp connection (C) H2	Weight Pump	Weight Pump + Motor
EVMS(L)5 2/0.75	1.6	0.75	80	ø120	160	139	232	274	9.8	19.3	299	10.8	20.3	274	9.7	19.2
EVMS(L)5 3/1.1	1.6	1.1	80	ø120	160	139	232	302	10.2	21.3	327	11.3	22.4	302	10.2	21.3
EVMS(L)5 4/1.5	1.6	1.5	90 S	ø140	180	148	267	340	11	25	365	12	26	340	10.9	24.9
EVMS(L)5 5/2.2	1.6	2.2	90 L	ø140	180	148	267	368	11.4	27.4	393	12.5	28.5	368	11.4	27.4
EVMS(L)5 6/2.2	1.6	2.2	90 L	ø140	180	148	267	396	11.9	27.9	421	12.9	28.9	396	11.8	27.8
EVMS(L)5 7/3.0	1.6	3.0	100 L	ø160	196	155	306	434	12.7	35.5	459	13.7	36.5	434	12.6	35.4
EVMS(L)5 8/3.0	1.6	3.0	100 L	ø160	196	155	306	462	13	35.8	487	14	36.8	462	12.9	35.7
EVMS(L)5 9/3.0	1.6	3.0	100 L	ø160	196	155	306	490	13.4	36.2	515	14.5	37.3	490	13.4	36.2
EVMS(L)5 10/4.0	1.6	4.0	112 M	ø160	196	155	306	518	13.9	40.4	543	15	41.5	518	13.9	40.4
EVMS(L)5 11/4.0	1.6	4.0	112 M	ø160	196	155	306	546	14.7	41.2	571	15.7	42.2	546	14.6	41.1
EVMS(L)5 12/4.0	1.6	4.0	112 M	ø160	196	155	306	574	15.8	42.3	599	16.8	43.3	574	15.7	42.2
EVMS(L)5 13/5.5	2.5	5.5	132 S	ø300	225	160	328	-	-	-	721	23.9	62.5	696	22.8	61.4
EVMS(L)5 14/5.5	2.5	5.5	132 S	ø300	225	160	328	-	-	-	749	24.4	63	724	23.3	61.9
EVMS(L)5 15/5.5	2.5	5.5	132 S	ø300	225	160	328	-	-	-	777	24.9	63.5	752	23.8	62.4
EVMS(L)5 16/5.5	2.5	5.5	132 S	ø300	225	160	328	-	-	-	805	25.5	64.1	780	24.4	63
EVMS(L)5 17/7.5	2.5	7.5	132 S	ø300	225	160	350	-	-	-	833	26.1	66.5	808	25	65.4
EVMS(L)5 19/7.5	2.5	7.5	132 S	ø300	225	160	350	-	-	-	889	27	67.4	864	25.9	66.3

1.6 MPa=16 bar ; 2.5 MPa=25 bar
- not available model

EBARA Pumps Europe reserves the right to make changes without prior notice

SECTIONAL VIEW
EVMS(L)5

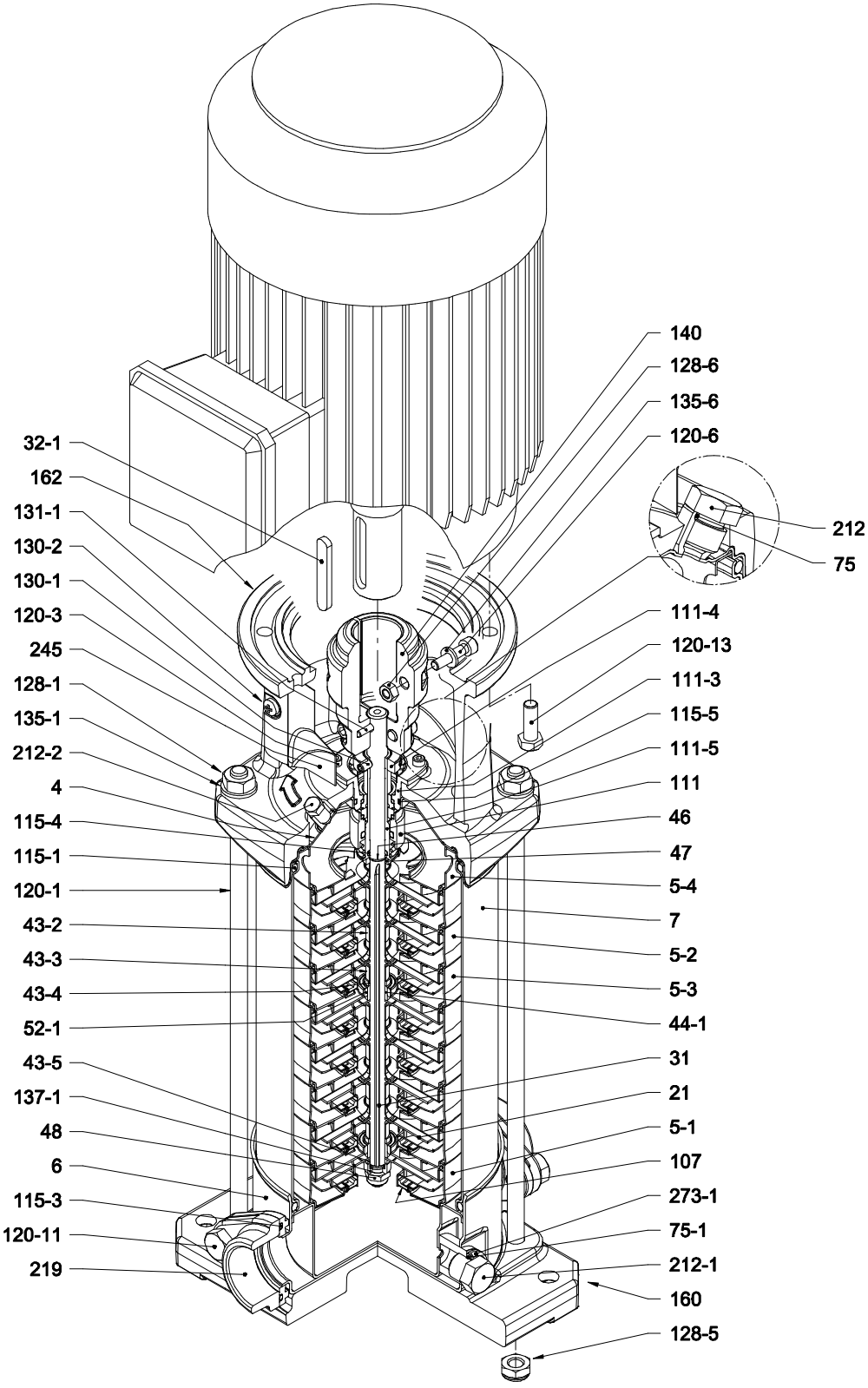

with Oval flange (N)

EBARA Pumps Europe reserves the right to make changes without prior notice

PIPE CONNECTION
EVMS(L)5

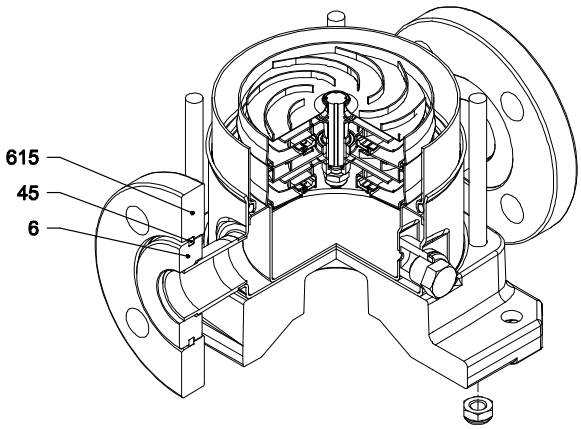

with Loose round flange (LF)

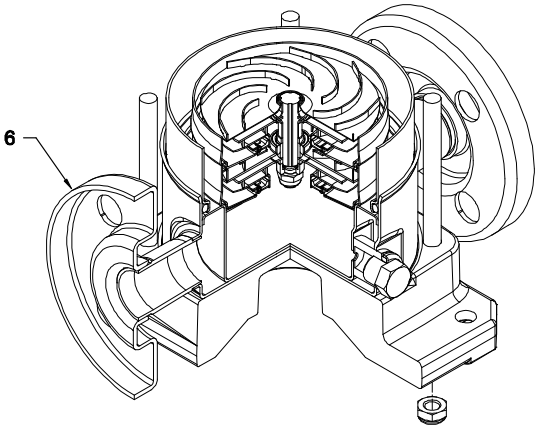

with Round flange (F)

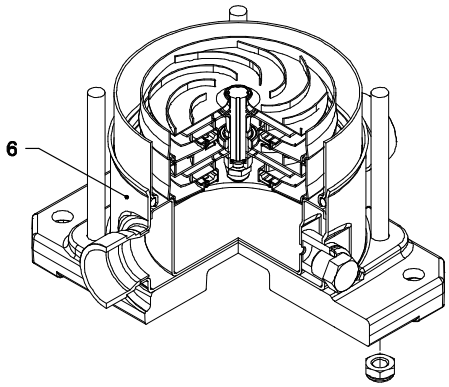

with Victaulic® connection (V)

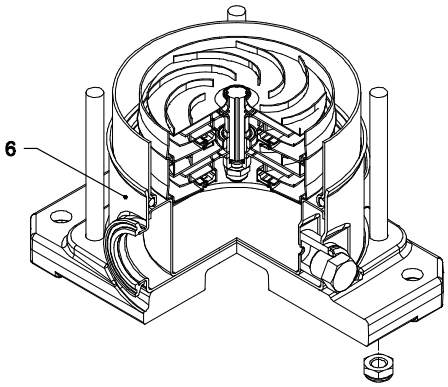

with Clamp connection (C)

EBARA Pumps Europe reserves the right to make changes without prior notice

SECTIONAL TABLE
EVMS(L)5

N°	PART NAME		MATERIAL EVMS	MATERIAL EVMSL	DIMENSIONS	STANDARD
4	Casing cover		EN 1.4301 (AISI 304)	EN 1.4401 (AISI 316)		
5-1	Suction casing		EN 1.4301 (AISI 304)	EN 1.4401 (AISI 316)		
5-2	Intermediate Casing		EN 1.4301 (AISI 304)	EN 1.4401 (AISI 316)		
5-3	Intermediate casing bearing		EN 1.4301 (AISI 304)	EN 1.4401 (AISI 316)		
5-4	Discharge casing		EN 1.4301 (AISI 304)	EN 1.4401 (AISI 316)		
6	Bottom casing		EN 1.4308 (AISI 304)	EN 1.4408 (AISI 316)		
7	Outer casing		EN 1.4301 (AISI 304)	EN 1.4404 (AISI 316L)		
21	Impeller		EN 1.4301 (AISI 304)	EN 1.4401 (AISI 316)		
31	Shaft		EN 1.4301 (AISI 304) - EN 1.4462 (AISI 329A)	EN 1.4404 (AISI 316L) - EN 1.4462 (AISI 329A)		
32-1	Adjuster Key		EN 1.4301 (AISI 304)			
43-2	Shaft sleeve (intermediate)		EN 1.4301 (AISI 304)	EN 1.4404 (AISI 316L)		
43-3	Shaft sleeve (bearing)		EN 1.4301 (AISI 304)	EN 1.4401 (AISI 316)		
43-4	Shaft sleeve (adjustment)		EN 1.4301 (AISI 304)	EN 1.4401 (AISI 316)		
43-5	Shaft sleeve (last stage)		EN 1.4301 (AISI 304)	EN 1.4401 (AISI 316)		
44-1	Shaft sleeve bearing		Tungsten carbide			
45	Flange holder		EN 1.4301 (AISI 304)			
46	Ring (mechanical seal)		EN 1.4301 (AISI 304)	EN 1.4401 (AISI 316)		
47	Ring Holder		EN 1.4301 (AISI 304)	EN 1.4401 (AISI 316)		
48	Impeller nut		A2-70 UNI 7323 with inox insert	A4-70 UNI 7323 with inox insert	M8	
52-1	Bearing		Tungsten carbide			
75	O-Ring (plug)		EPDM		D. 12.37x2.62	OR 3050
75-1	O-Ring (plug)		EPDM			
107	Liner ring		EN 1.4301 (AISI 304) + PPS	EN 1.4401 (AISI 316) + PPS		
111	Mechanical Seal		SiC/Carbon/EPDM			
111-3	Mechanical seal seat		EN 1.4301 (AISI 304)	EN 1.4401 (AISI 316)		
111-4	Seal holder		EN 1.4301 (AISI 304)			
111-5	Mechanical seal cartridge		EN 1.4301 (AISI 304)	EN 1.4401 (AISI 316)		
115-1	O-Ring (outer casing)		EPDM		D. 129.54x5.34	OR 6510
115-3	O-Ring		EPDM			
115-4	O-Ring (cartridge sleeve)		EPDM		D. 11.91x2.62	OR 115
115-5	O-Ring (seal cover)		EPDM		D. 32.99x2.62	OR 3131
120-1	Tie-rod		Galvanized steel 6.8 strenght class ISO 898/1		M10	
120-3	Screw		A2-70 UNI 7323		M4x10	ISO 4762
120-6	Screw for coupling	up to 4.0 kW	Galvanized steel		M6x25	ISO 4762
		above 5.5 kW			M8x20	ISO 4762
120-11	Screw for counterflange		A2-70 UNI 7323			
120-13	Screw for motor	MEC 80	Galvanized steel 8.8 strenght class ISO 898/1		M6x20	ISO 4017
		MEC 90-100-112			M8x20	ISO 4017
		MEC 132			M12x40	ISO 4017
128-1	Nut for tie rod		Galvanized steel		M10	UNI 5588
128-3	Nut (motor)	MEC 132	Galvanized steel		M12	ISO 4032
128-5	Nut for tie rod		A2-70 UNI 7323		M10	UNI 7474
128-6	Nut for coupling		Galvanized steel		M6	ISO 4032
130-1	Set screw		A2-70 UNI 7323		M5x8	UNI 5923
130-2	Screw for coupling guard		A2-70 UNI 7323		M5x6	UNI 7687
131-1	Pin for shaft		Carbon Steel		D. 4x32	UNI 4838
135-1	Washer		Galvanized steel		D. 10.5x21x2	UNI 6592
135-6	Washer		Carbon Steel		Ø6	
137-1	Impeller spacer		EN 1.4301 (AISI 304)	EN 1.4401 (AISI 316)		
140	Coupling	up to 4.0 kW	Die cast Aluminium EN AB-AISI11Cu2 (Fe)			
		above 5.5 kW	Cast Iron			
160	Base		Die cast Aluminium EN AB-AISI11Cu2 (Fe)			
162	Motor bracket		Cast iron EN-GJL-200-EN 1561			
212	Plug		EN 1.4301 (AISI 304)	EN 1.4401 (AISI 316)	G 3/8	
212-1	Plug		EN 1.4301 (AISI 304)	EN 1.4401 (AISI 316)	G 3/8	
212-2	Venting plug		EN 1.4404 (AISI 316L)			
219	Counter flange		EN 1.4301 (AISI 304)	EN 1.4401 (AISI 316)		
245	Coupling guard		EN 1.4301 (AISI 304)			
273-1	Plug Washer		EN 1.4301 (AISI 304)	EN 1.4401 (AISI 316)		
615	Flange		Nodular Cast Iron			

EBARA Pumps Europe reserves the right to make changes without prior notice

QUANTITY FOR MODEL EVMS(L)5

Pump Type	N°																														
	4	5-1	5-2	5-3	5-4	6	7	21	31***	32-1	43-2	43-3	43-4	43-5	44-1	45**	46	47	48	52-1	75	75-1	107	111	111-3	111-4	111-5	115-1	115-3*	115-4	115-5
EVMS(L)5 2/0.55	1	1	/	1	1	1	1	2	1	1	/	1	1	/	1	4	2	1	1	1	1	2	2	1	1	1	1	2	2	1	1
EVMS(L)5 3/1.1	1	1	1	1	1	1	1	3	1	1	3	1	1	1	1	4	2	1	1	1	1	2	3	1	1	1	1	2	2	1	1
EVMS(L)5 4/1.5	1	1	2	1	1	1	1	4	1	1	5	1	1	/	1	4	2	1	1	1	1	2	4	1	1	1	1	2	2	1	1
EVMS(L)5 5/2.2	1	1	3	1	1	1	1	5	1	1	7	1	1	/	1	4	2	1	1	1	1	2	5	1	1	1	1	2	2	1	1
EVMS(L)5 6/2.2	1	1	4	1	1	1	1	6	1	1	9	1	1	1	1	4	2	1	1	1	1	2	6	1	1	1	1	2	2	1	1
EVMS(L)5 7/3.0	1	1	5	1	1	1	1	7	1	1	11	1	1	/	1	4	2	1	1	1	1	2	7	1	1	1	1	2	2	1	1
EVMS(L)5 8/3.0	1	1	6	1	1	1	1	8	1	1	13	1	1	/	1	4	2	1	1	1	1	2	8	1	1	1	1	2	2	1	1
EVMS(L)5 9/3.0	1	1	7	1	1	1	1	9	1	1	15	1	1	1	1	4	2	1	1	1	1	2	9	1	1	1	1	2	2	1	1
EVMS(L)5 10/4.0	1	1	8	1	1	1	1	10	1	1	17	1	1	/	1	4	2	1	1	1	1	2	10	1	1	1	1	2	2	1	1
EVMS(L)5 11/4.0	1	1	8	2	1	1	1	11	1	1	17	2	2	/	2	4	2	1	1	2	1	2	11	1	1	1	1	2	2	1	1
EVMS(L)5 12/4.0	1	1	9	2	1	1	1	12	1	1	19	2	2	1	2	4	2	1	1	2	1	2	12	1	1	1	1	2	2	1	1
EVMS(L)5 13/5.5	1	1	10	2	1	1	1	13	1	1	21	2	2	/	2	4	2	1	1	2	1	2	13	1	1	1	1	2	/	1	1
EVMS(L)5 14/5.5	1	1	11	2	1	1	1	14	1	1	23	2	2	/	2	4	2	1	1	2	1	2	14	1	1	1	1	2	/	1	1
EVMS(L)5 15/5.5	1	1	12	2	1	1	1	15	1	1	25	2	2	1	2	4	2	1	1	2	1	2	15	1	1	1	1	2	/	1	1
EVMS(L)5 16/5.5	1	1	13	2	1	1	1	16	1	1	27	2	2	/	2	4	2	1	1	2	1	2	16	1	1	1	1	2	/	1	1
EVMS(L)5 17/7.5	1	1	14	2	1	1	1	17	1	1	29	2	2	/	2	4	2	1	1	2	1	2	17	1	1	1	1	2	/	1	1
EVMS(L)5 19/7.5	1	1	16	2	1	1	1	19	1	1	33	2	2	/	2	4	2	1	1	2	1	2	19	1	1	1	1	2	/	1	1

Pump Type	N°																										
	120-1	120-3	120-6	120-11*	120-13	128-1	128-3	128-5	128-6	130-1	130-2	131-1	135-1	135-6	137-1	140	160	162	212	212-1	212-2	219*	245	273-1	615**
EVMS(L)5 2/0.55	4	4	4	4	4	4	/	4	4	3	4	1	4	4	1	2	1	1	1	2	1	2	2	2	2
EVMS(L)5 3/1.1	4	4	4	4	4	4	/	4	4	3	4	1	4	4	1	2	1	1	1	2	1	2	2	2	2
EVMS(L)5 4/1.5	4	4	4	4	4	4	/	4	4	3	4	1	4	4	1	2	1	1	1	2	1	2	2	2	2
EVMS(L)5 5/2.2	4	4	4	4	4	4	/	4	4	3	4	1	4	4	1	2	1	1	1	2	1	2	2	2	2
EVMS(L)5 6/2.2	4	4	4	4	4	4	/	4	4	3	4	1	4	4	1	2	1	1	1	2	1	2	2	2	2
EVMS(L)5 7/3.0	4	4	4	4	4	4	/	4	4	3	4	1	4	4	1	2	1	1	1	2	1	2	2	2	2
EVMS(L)5 8/3.0	4	4	4	4	4	4	/	4	4	3	4	1	4	4	1	2	1	1	1	2	1	2	2	2	2
EVMS(L)5 9/3.0	4	4	4	4	4	4	/	4	4	3	4	1	4	4	1	2	1	1	1	2	1	2	2	2	2
EVMS(L)5 10/4.0	4	4	4	4	4	4	/	4	4	3	4	1	4	4	1	2	1	1	1	2	1	2	2	2	2
EVMS(L)5 11/4.0	4	4	4	4	4	4	/	4	4	3	4	1	4	4	1	2	1	1	1	2	1	2	2	2	2
EVMS(L)5 12/4.0	4	4	4	4	4	4	/	4	4	3	4	1	4	4	1	2	1	1	1	2	1	2	2	2	2
EVMS(L)5 13/5.5	4	4	4	/	4	4	4	4	4	3	4	1	4	4	1	2	1	1	1	2	1	/	2	2	2
EVMS(L)5 14/5.5	4	4	4	/	4	4	4	4	4	3	4	1	4	4	1	2	1	1	1	2	1	/	2	2	2
EVMS(L)5 15/5.5	4	4	4	/	4	4	4	4	4	3	4	1	4	4	1	2	1	1	1	2	1	/	2	2	2
EVMS(L)5 16/5.5	4	4	4	/	4	4	4	4	4	3	4	1	4	4	1	2	1	1	1	2	1	/	2	2	2
EVMS(L)5 17/7.5	4	4	4	/	4	4	4	4	4	3	4	1	4	4	1	2	1	1	1	2	1	/	2	2	2
EVMS(L)5 19/7.5	4	4	4	/	4	4	4	4	4	3	4	1	4	4	1	2	1	1	1	2	1	/	2	2	2

* only for Oval flange (N)
** only for Loose round flange (LF)
*** □ shaft in EN 1.4462 (AISI 329A)
128-3: only for motor up to 5.5 kW (see drawing pag.247)

EBARA Pumps Europe reserves the right to make changes without prior notice

VERTICAL MULTISTAGE PUMPS EVMS

PERFORMANCE CURVE
EVMSG5

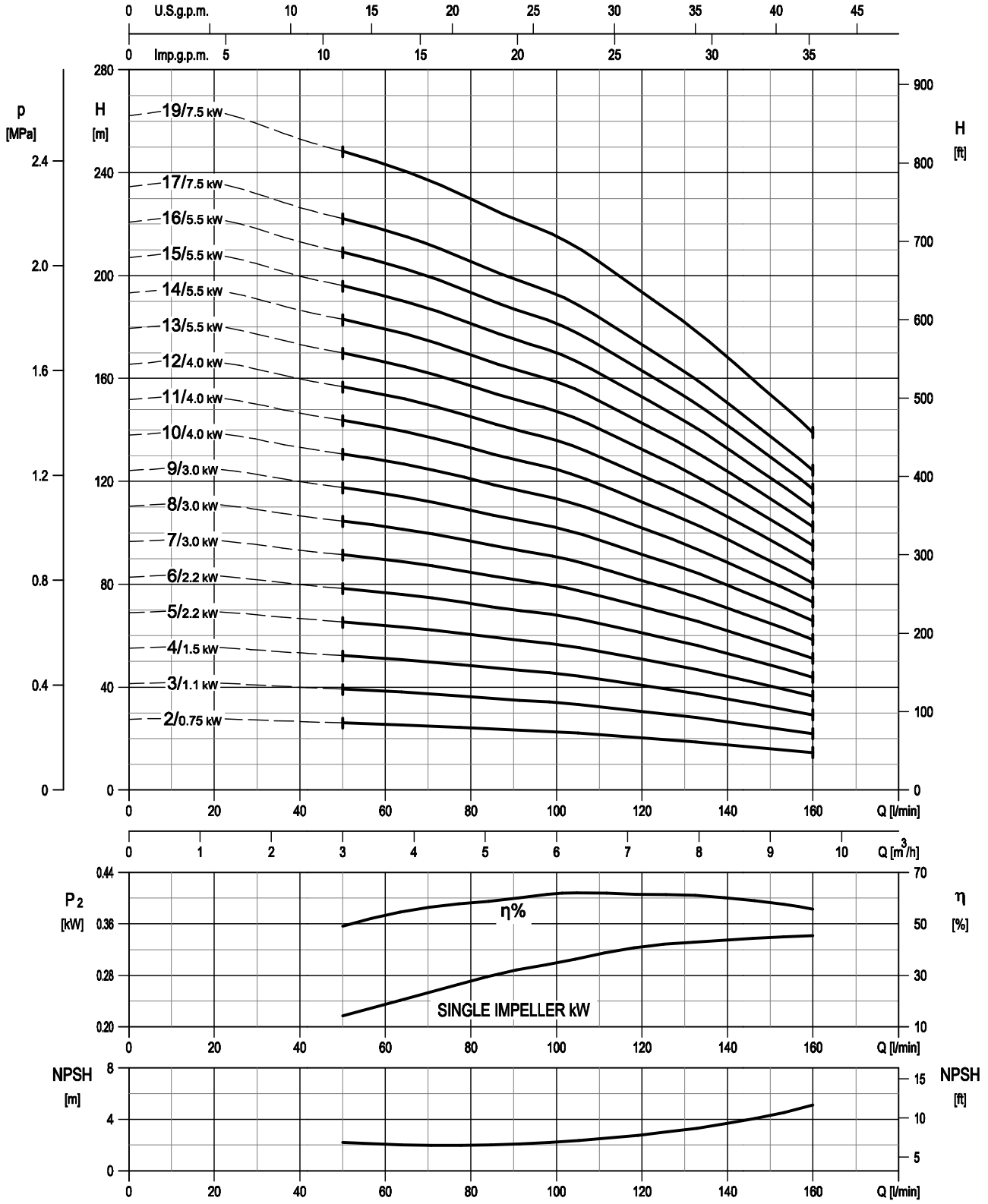

Rotation speed ≈3500 min-1
Test standard: ISO 9906:2012 - Grade 3B

EBARA Pumps Europe reserves the right to make changes without prior notice

TECHNICAL DATA
EVMSG5

Dimensional sketch

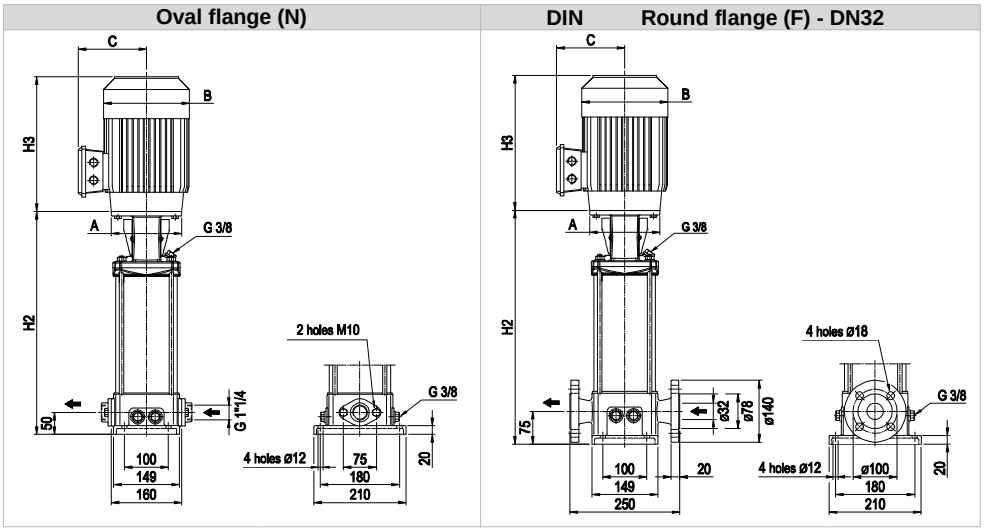

Dimensions [mm] and Weights [Kg]

Pump Type	Pmax [MPa]	Motor						Oval flange (N)			Round flange (F)		
		kW	Size	A	3 ~ B	3 ~ C	3 ~ H3	H2	Weight Pump	Weight Pump + Motor	H2	Weight Pump	Weight Pump + Motor
EVMSG5 2/0.75	1.6	0.75	80	ø120	160	139	232	274	10.9	20.4	299	15.9	25.4
EVMSG5 3/1.1	1.6	1.1	80	ø120	160	139	232	302	11.4	22.5	327	16.4	27.5
EVMSG5 4/1.5	1.6	1.5	90 S	ø140	180	148	267	340	12.1	26.1	365	17.1	31.1
EVMSG5 5/2.2	1.6	2.2	90 L	ø140	180	148	267	368	12.6	28.6	393	17.6	33.6
EVMSG5 6/2.2	1.6	2.2	90 L	ø140	180	148	267	396	13.1	29.1	421	18.1	34.1
EVMSG5 7/3.0	1.6	3.0	100 L	ø160	196	155	306	434	13.8	36.6	459	18.8	41.6
EVMSG5 8/3.0	1.6	3.0	100 L	ø160	196	155	306	462	14.1	36.9	487	19.1	41.9
EVMSG5 9/3.0	1.6	3.0	100 L	ø160	196	155	306	490	14.6	37.4	515	19.6	42.4
EVMSG5 10/4.0	1.6	4.0	112 M	ø160	196	155	306	518	15.1	41.6	543	20.1	46.6
EVMSG5 11/4.0	1.6	4.0	112 M	ø160	196	155	306	546	15.8	42.3	571	20.8	47.3
EVMSG5 12/4.0	1.6	4.0	112 M	ø160	196	155	306	574	16.9	43.4	599	21.9	48.4
EVMSG5 13/5.5	2.5	5.5	132 S	ø300	225	160	328	-	-	-	721	29	67.6
EVMSG5 14/5.5	2.5	5.5	132 S	ø300	225	160	328	-	-	-	749	29.5	68.1
EVMSG5 15/5.5	2.5	5.5	132 S	ø300	225	160	328	-	-	-	777	30	68.6
EVMSG5 16/5.5	2.5	5.5	132 S	ø300	225	160	328	-	-	-	805	30.6	69.2
EVMSG5 17/7.5	2.5	7.5	132 S	ø300	225	160	350	-	-	-	833	31.2	71.6
EVMSG5 19/7.5	2.5	7.5	132 S	ø300	225	160	350	-	-	-	889	32.1	72.5

1.6 MPa=16 bar ; 2.5 MPa=25 bar
- not available model

EBARA Pumps Europe reserves the right to make changes without prior notice

SECTIONAL VIEW
EVMSG5

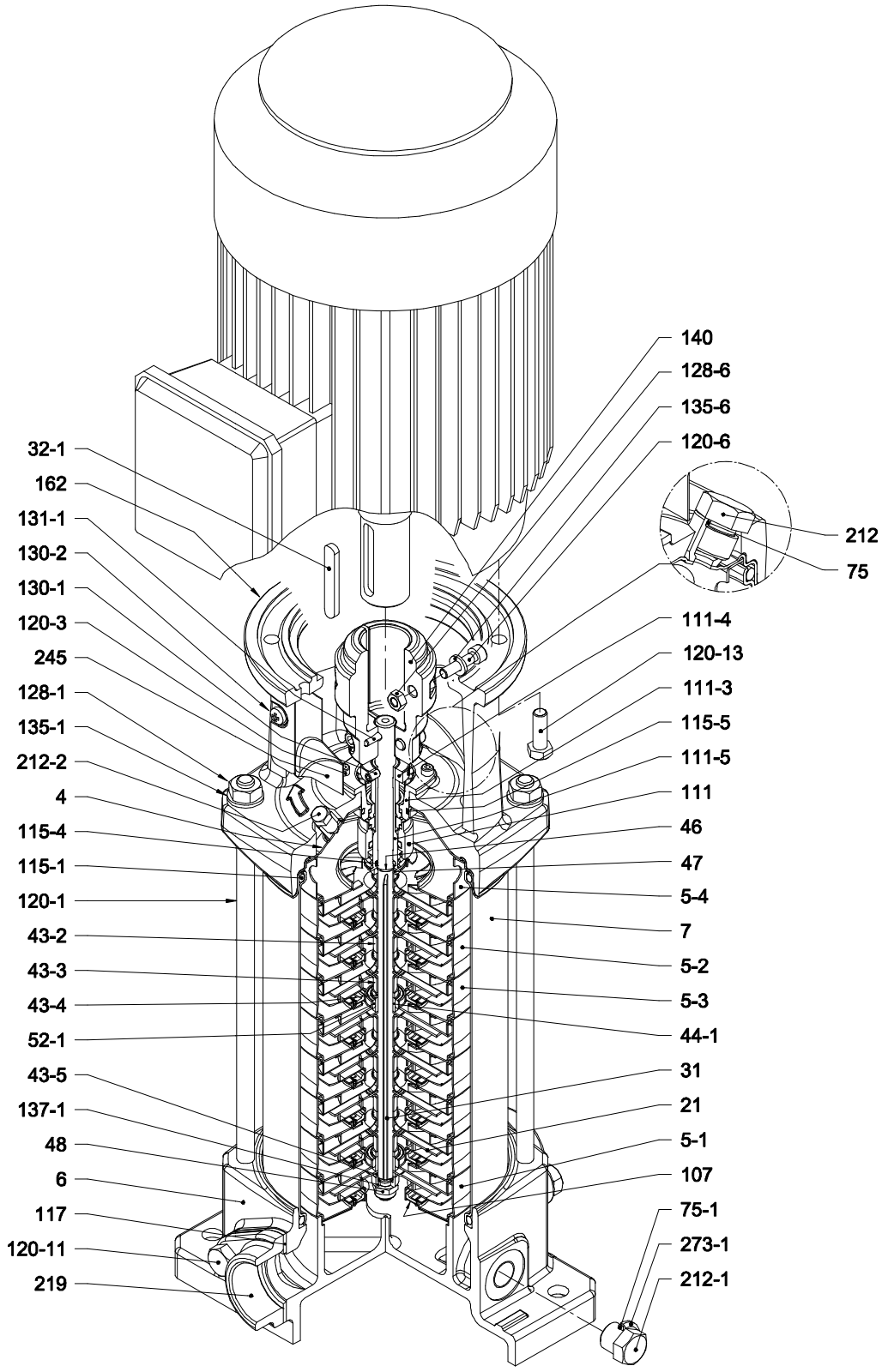

with Oval flange (N)

EBARA Pumps Europe reserves the right to make changes without prior notice

PIPE CONNECTION
EVMSG5

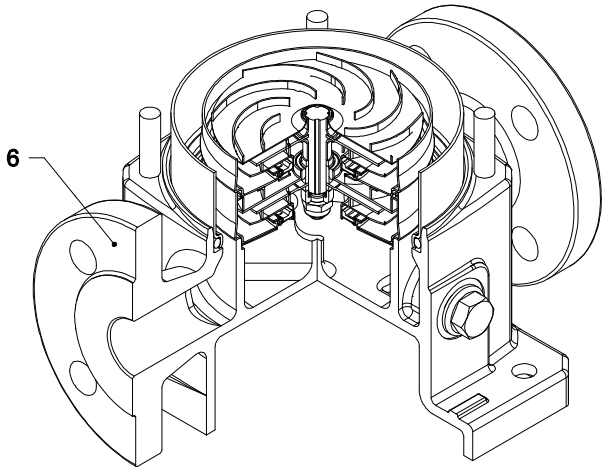

with Round flange (F)

EBARA Pumps Europe reserves the right to make changes without prior notice

SECTIONAL TABLE
EVMSG5

N°	PART NAME		MATERIAL EVMSG	DIMENSIONS	STANDARD
4	Casing cover		EN 1.4301 (AISI 304)		
5-1	Suction casing		EN 1.4301 (AISI 304)		
5-2	Intermediate Casing		EN 1.4301 (AISI 304)		
5-3	Intermediate casing bearing		EN 1.4301 (AISI 304)		
5-4	Discharge casing		EN 1.4301 (AISI 304)		
6	Bottom casing		Cast Iron EN GJL-250-EN1561		
7	Outer casing		EN 1.4301 (AISI 304)		
21	Impeller		EN 1.4301 (AISI 304)		
31	Shaft		EN 1.4301 (AISI 304) - EN 1.4462 (AISI 329A)		
32-1	Adjuster Key		EN 1.4301 (AISI 304)		
43-2	Shaft sleeve (intermediate)		EN 1.4301 (AISI 304)		
43-3	Shaft sleeve (bearing)		EN 1.4301 (AISI 304)		
43-4	Shaft sleeve (adjustment)		EN 1.4301 (AISI 304)		
43-5	Shaft sleeve (last stage)		EN 1.4301 (AISI 304)		
44-1	Shaft sleeve bearing		Tungsten carbide		
46	Ring (mechanical seal)		EN 1.4301 (AISI 304)		
47	Ring Holder		EN 1.4301 (AISI 304)		
48	Impeller nut		A2-70 UNI 7323 with inox insert	M8	
52-1	Bearing		Tungsten carbide		
75	O-Ring (plug)		EPDM	D. 12.37x2.62	OR 3050
75-1	O-Ring (plug)		EPDM		
107	Liner ring		EN 1.4301 (AISI 304) + PPS		
111	Mechanical Seal		SiC/Carbon/EPDM		
111-3	Mechanical seal seat		EN 1.4301 (AISI 304)		
111-4	Seal holder		EN 1.4301 (AISI 304)		
111-5	Mechanical seal cartridge		EN 1.4301 (AISI 304)		
115-1	O-Ring (outer casing)		EPDM	D. 129.54x5.34	OR 6510
115-4	O-Ring (cartridge sleeve)		EPDM	D. 11.91x2.62	OR 115
115-5	O-Ring (seal cover)		EPDM	D. 32.99x2.62	OR 3131
117	Flange gasket		EPDM		
120-1	Tie-rod		Galvanized steel 6.8 strenght class ISO 898/1	M10	
120-3	Screw		A2-70 UNI 7323	M4x10	ISO 4762
120-6	Screw for coupling	up to 4.0 kW	Galvanized steel	M6x25	ISO 4762
		above 5.5 kW		M8x20	ISO 4762
120-11	Screw for counterflange		A2-70 UNI 7323		
120-13	Screw for motor	MEC 80	Galvanized steel 8.8 strenght class ISO 898/1	M6x20	ISO 4017
		MEC 90-100-112		M8x20	ISO 4017
		MEC 132		M12x40	ISO 4017
128-1	Nut for tie rod		Galvanized steel	M10	UNI 5588
128-3	Nut (motor)	MEC 132	Galvanized steel	M12	ISO 4032
128-6	Nut for coupling		Galvanized steel	M6	ISO 4032
130-1	Set screw		A2-70 UNI 7323	M5x8	UNI 5923
130-2	Screw for coupling guard		A2-70 UNI 7323	M5x6	UNI 7687
131-1	Pin for shaft		Carbon Steel	D. 4x32	UNI 4838
135-1	Washer		Galvanized steel	D. 10.5x21x2	UNI 6592
135-6	Washer		Carbon Steel	Ø6	
137-1	Impeller spacer		EN 1.4301 (AISI 304)		
140	Coupling	up to 4.0 kW	Die cast Aluminium EN AB-AISI11Cu2 (Fe)		
		above 5.5 kW	Cast Iron		
162	Motor bracket		Cast iron EN-GJL-200-EN 1561		
212	Plug		EN 1.4301 (AISI 304)	G 3/8	
212-1	Plug		EN 1.4301 (AISI 304)	G 3/8	
212-2	Venting plug		EN 1.4404 (AISI 316L)		
219	Counter flange		Galvanized steel		
245	Coupling guard		EN 1.4301 (AISI 304)		
273-1	Plug Washer		EN 1.4301 (AISI 304)		

EBARA Pumps Europe reserves the right to make changes without prior notice

QUANTITY FOR MODEL EVMSG5

Pump Type	N°																											
	4	5-1	5-2	5-3	5-4	6	7	21	31***	32-1	43-2	43-3	43-4	43-5	44-1	46	47	48	52-1	75	75-1	107	111	111-3	111-4	111-5	115-1	115-4	115-5
EVMSG5 2/0.55	1	1	/	1	1	1	1	2	1	1	/	1	1	/	1	2	1	1	1	1	4	2	1	1	1	1	2	1	1
EVMSG5 3/1.1	1	1	1	1	1	1	1	3	1	1	3	1	1	1	1	2	1	1	1	1	4	3	1	1	1	1	2	1	1
EVMSG5 4/1.5	1	1	2	1	1	1	1	4	1	1	5	1	1	/	1	2	1	1	1	1	4	4	1	1	1	1	2	1	1
EVMSG5 5/2.2	1	1	3	1	1	1	1	5	1	1	7	1	1	/	1	2	1	1	1	1	4	5	1	1	1	1	2	1	1
EVMSG5 6/2.2	1	1	4	1	1	1	1	6	1	1	9	1	1	1	1	2	1	1	1	1	4	6	1	1	1	1	2	1	1
EVMSG5 7/3.0	1	1	5	1	1	1	1	7	1	1	11	1	1	/	1	2	1	1	1	1	4	7	1	1	1	1	2	1	1
EVMSG5 8/3.0	1	1	6	1	1	1	1	8	1	1	13	1	1	/	1	2	1	1	1	1	4	8	1	1	1	1	2	1	1
EVMSG5 9/3.0	1	1	7	1	1	1	1	9	1	1	15	1	1	1	1	2	1	1	1	1	4	9	1	1	1	1	2	1	1
EVMSG5 10/4.0	1	1	8	1	1	1	1	10	1	1	17	1	1	/	1	2	1	1	1	1	4	10	1	1	1	1	2	1	1
EVMSG5 11/4.0	1	1	8	2	1	1	1	11	1	1	17	2	2	/	2	2	1	1	2	1	4	11	1	1	1	1	2	1	1
EVMSG5 12/4.0	1	1	9	2	1	1	1	12	1	1	19	2	2	1	2	2	1	1	2	1	4	12	1	1	1	1	2	1	1
EVMSG5 13/5.5	1	1	10	2	1	1	1	13	1	1	21	2	2	/	2	2	1	1	2	1	4	13	1	1	1	1	2	1	1
EVMSG5 14/5.5	1	1	11	2	1	1	1	14	1	1	23	2	2	/	2	2	1	1	2	1	4	14	1	1	1	1	2	1	1
EVMSG5 15/5.5	1	1	12	2	1	1	1	15	1	1	25	2	2	1	2	2	1	1	2	1	4	15	1	1	1	1	2	1	1
EVMSG5 16/5.5	1	1	13	2	1	1	1	16	1	1	27	2	2	/	2	2	1	1	2	1	4	16	1	1	1	1	2	1	1
EVMSG5 17/7.5	1	1	14	2	1	1	1	17	1	1	29	2	2	/	2	2	1	1	2	1	4	17	1	1	1	1	2	1	1
EVMSG5 19/7.5	1	1	16	2	1	1	1	19	1	1	33	2	2	/	2	2	1	1	2	1	4	19	1	1	1	1	2	1	1

Pump Type	N°																								
	117*	120-1	120-3	120-6	120-11*	120-13	128-1	128-3	128-6	130-1	130-2	131-1	135-1	135-6	137-1	140	162	212	212-1	212-2	219*	245	273-1
EVMSG5 2/0.55	2	4	4	4	4	4	4	/	4	3	4	1	4	4	1	2	1	1	4	1	2	2	4
EVMSG5 3/1.1	2	4	4	4	4	4	4	/	4	3	4	1	4	4	1	2	1	1	4	1	2	2	4
EVMSG5 4/1.5	2	4	4	4	4	4	4	/	4	3	4	1	4	4	1	2	1	1	4	1	2	2	4
EVMSG5 5/2.2	2	4	4	4	4	4	4	/	4	3	4	1	4	4	1	2	1	1	4	1	2	2	4
EVMSG5 6/2.2	2	4	4	4	4	4	4	/	4	3	4	1	4	4	1	2	1	1	4	1	2	2	4
EVMSG5 7/3.0	2	4	4	4	4	4	4	/	4	3	4	1	4	4	1	2	1	1	4	1	2	2	4
EVMSG5 8/3.0	2	4	4	4	4	4	4	/	4	3	4	1	4	4	1	2	1	1	4	1	2	2	4
EVMSG5 9/3.0	2	4	4	4	4	4	4	/	4	3	4	1	4	4	1	2	1	1	4	1	2	2	4
EVMSG5 10/4.0	2	4	4	4	4	4	4	/	4	3	4	1	4	4	1	2	1	1	4	1	2	2	4
EVMSG5 11/4.0	2	4	4	4	4	4	4	/	4	3	4	1	4	4	1	2	1	1	4	1	2	2	4
EVMSG5 12/4.0	2	4	4	4	4	4	4	/	4	3	4	1	4	4	1	2	1	1	4	1	2	2	4
EVMSG5 13/5.5	/	4	4	4	/	4	4	4	4	3	4	1	4	4	1	2	1	1	4	1	/	2	4
EVMSG5 14/5.5	/	4	4	4	/	4	4	4	4	3	4	1	4	4	1	2	1	1	4	1	/	2	4
EVMSG5 15/5.5	/	4	4	4	/	4	4	4	4	3	4	1	4	4	1	2	1	1	4	1	/	2	4
EVMSG5 16/5.5	/	4	4	4	/	4	4	4	4	3	4	1	4	4	1	2	1	1	4	1	/	2	4
EVMSG5 17/7.5	/	4	4	4	/	4	4	4	4	3	4	1	4	4	1	2	1	1	4	1	/	2	4
EVMSG5 19/7.5	/	4	4	4	/	4	4	4	4	3	4	1	4	4	1	2	1	1	4	1	/	2	4

* only for Oval flange (N)
*** ☐ shaft in EN 1.4462 (AISI 329A)
128-3: only for motor up to 5.5 kW (see drawing pag.247)

EBARA Pumps Europe reserves the right to make changes without prior notice

VERTICAL MULTISTAGE PUMPS EVMS

PERFORMANCE CURVE
EVMS(L)10

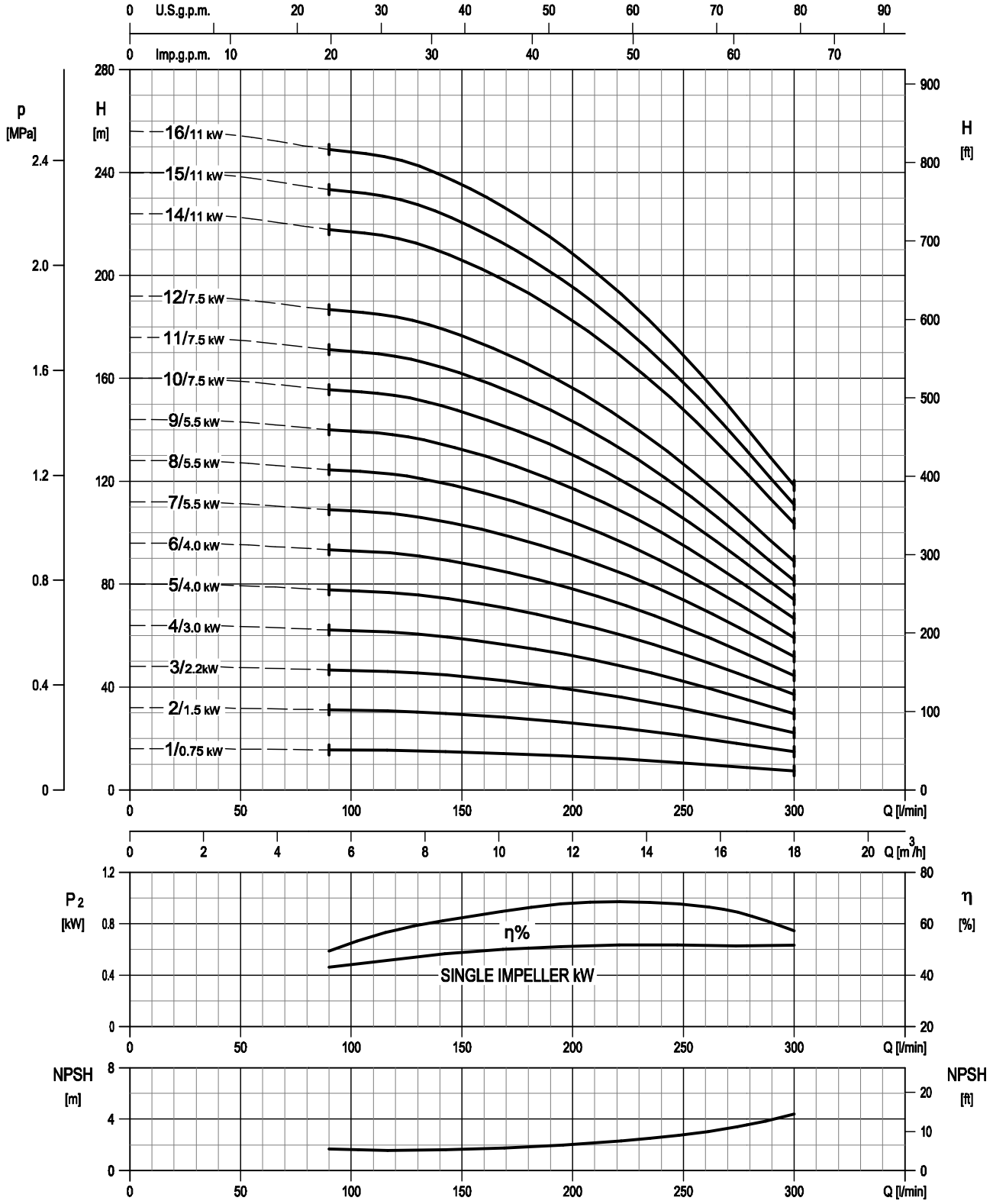

Rotation speed ≈3500 min-1
Test standard: ISO 9906:2012 - Grade 3B

EBARA Pumps Europe reserves the right to make changes without prior notice

TECHNICAL DATA
EVMS(L)10

Dimensional sketch

Oval flange (N)

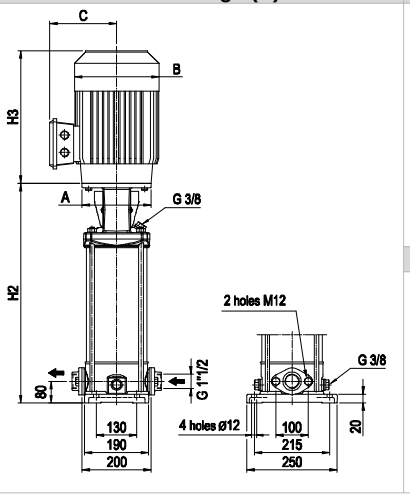

DIN Loose round flange (LF) - DN40

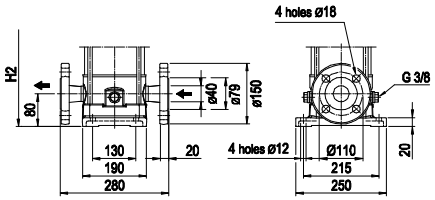

Victaulic® connection (V)

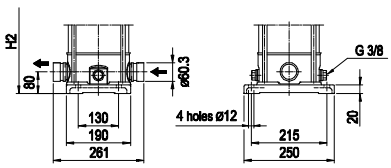

DIN Round flange (F) - DN40

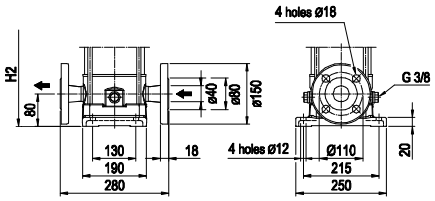

Clamp connection (C)

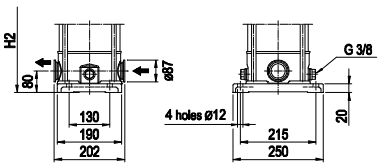

Dimensions [mm] and Weights [Kg]

Pump Type	Pmax [MPa]	Motor kW	Size	A	3 ~ B	C	H3	Oval flange (N) H2	Weight Pump	Weight Pump + Motor	Loose round flange (LF) Round flange (F) H2	Weight Pump	Weight Pump + Motor	Victaulic® connection (V) Clamp connection (C) H2	Weight Pump	Weight Pump + Motor
EVMS(L)10 1/0.75	1.6	0.75	80	ø120	160	139	232	343	19.7	29.2	343	20.7	30.2	343	19.6	29.1
EVMS(L)10 2/1.5	1.6	1.5	90 S	ø140	180	148	267	353	19.8	33.8	353	20.9	34.9	353	19.8	33.8
EVMS(L)10 3/2.2	1.6	2.2	90 L	ø140	180	148	267	383	20.7	36.7	383	21.7	37.7	383	20.7	36.7
EVMS(L)10 4/3.0	1.6	3.0	100 L	ø160	196	155	306	423	21.7	44.5	423	22.7	45.5	423	21.6	44.4
EVMS(L)10 5/4.0	1.6	4.0	112 M	ø160	196	155	306	453	22.5	49	453	23.5	50	453	22.5	49
EVMS(L)10 6/4.0	1.6	4.0	112 M	ø160	196	155	306	483	23.3	49.8	483	24.4	50.9	483	23.3	49.8
EVMS(L)10 7/5.5	1.6	5.5	132 S	ø300	225	160	328	611	31.2	69.8	611	32.3	70.9	611	31.2	69.8
EVMS(L)10 8/5.5	1.6	5.5	132 S	ø300	225	160	328	641	32.4	71	641	33.5	72.1	641	32.4	71
EVMS(L)10 9/5.5	1.6	5.5	132 S	ø300	225	160	328	671	33.3	71.9	671	34.3	72.9	671	33.2	71.8
EVMS(L)10 10/7.5	1.6	7.5	132 S	ø300	225	160	350	701	34.1	74.5	701	35.1	75.5	701	34.1	74.5
EVMS(L)10 11/7.5	2.5	7.5	132 S	ø300	225	160	350	-	-	-	731	36.8	77.2	731	35.7	76.1
EVMS(L)10 12/7.5	2.5	7.5	132 S	ø300	225	160	350	-	-	-	761	37.7	78.1	761	36.6	77
EVMS(L)10 14/11	2.5	11	160 M	ø350	248	194	476	-	-	-	851	47.7	110.2	851	46.6	109.1
EVMS(L)10 15/11	2.5	11	160 M	ø350	248	194	476	-	-	-	881	48.6	111.1	881	47.6	110.1
EVMS(L)10 16/11	2.5	11	160 M	ø350	248	194	476	-	-	-	911	49.5	112	911	48.5	111

1.6 MPa=16 bar ; 2.5 MPa=25 bar
- not available model

EBARA Pumps Europe reserves the right to make changes without prior notice

SECTIONAL VIEW
EVMS(L)10

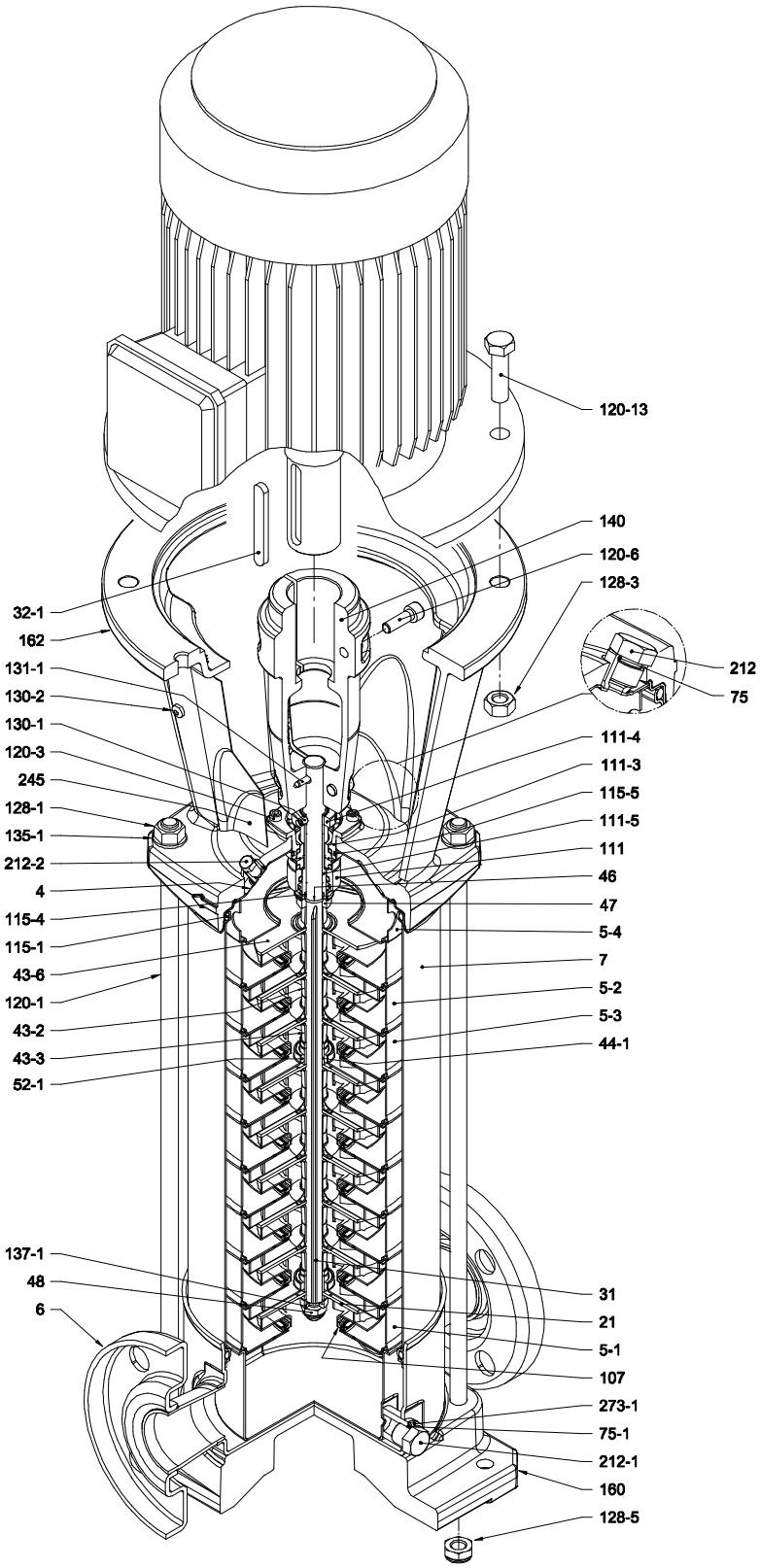

with Round flange (F)

EBARA Pumps Europe reserves the right to make changes without prior notice

PIPE CONNECTION
EVMS(L)10

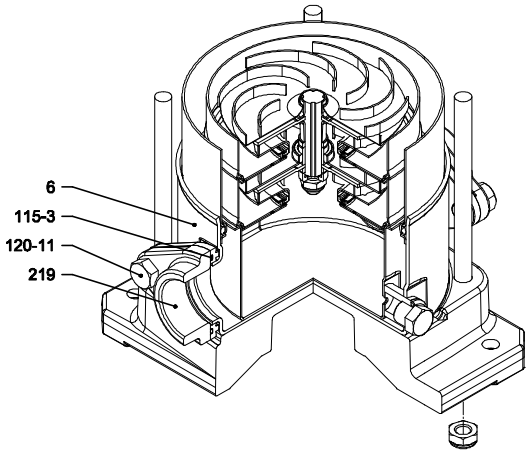

with Oval flange (N)

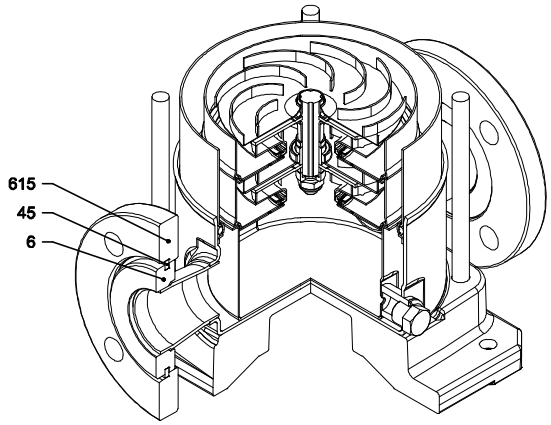

with Loose round flange (LF)

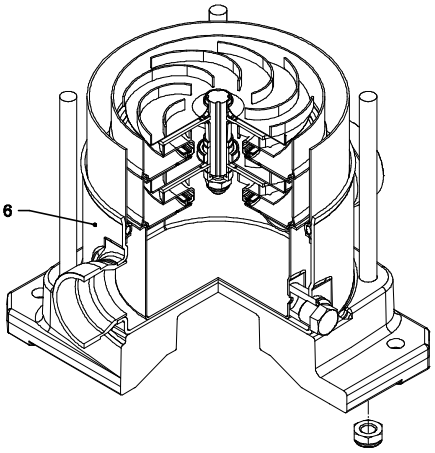

with Victaulic® connection (V)

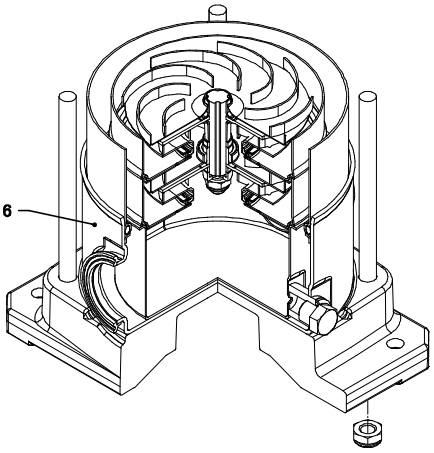

with Clamp connection (C)

EBARA Pumps Europe reserves the right to make changes without prior notice

SECTIONAL TABLE
EVMS(L)10

N°	PART NAME		MATERIAL EVMS	MATERIAL EVMSL	DIMENSIONS	STANDARD
4	Casing cover		EN 1.4301 (AISI 304)	EN 1.4401 (AISI 316)		
5-1	Suction casing		EN 1.4301 (AISI 304)	EN 1.4401 (AISI 316)		
5-2	Intermediate Casing		EN 1.4301 (AISI 304)	EN 1.4401 (AISI 316)		
5-3	Intermediate casing bearing		EN 1.4301 (AISI 304)	EN 1.4401 (AISI 316)		
5-4	Discharge casing		EN 1.4301 (AISI 304)	EN 1.4401 (AISI 316)		
6	Bottom casing		EN 1.4308 (AISI 304)	EN 1.4408 (AISI 316)		
7	Outer casing		EN 1.4301 (AISI 304)	EN 1.4404 (AISI 316L)		
21	Impeller		EN 1.4301 (AISI 304)	EN 1.4401 (AISI 316)		
31	Shaft		EN 1.4301 (AISI 304)	EN 1.4404 (AISI 316L)		
32-1	Adjuster Key		EN 1.4301 (AISI 304)			
43-2	Shaft sleeve (intermediate)		EN 1.4301 (AISI 304)	EN 1.4404 (AISI 316L)		
43-3	Shaft sleeve (bearing)		EN 1.4301 (AISI 304)	EN 1.4401 (AISI 316)		
43-6	Washer		EN 1.4404 (AISI 316L)		D. 26x1.2	
44-1	Shaft sleeve bearing		Tungsten carbide			
45	Flange holder		EN 1.4301 (AISI 304)			
46	Ring (mechanical seal)		EN 1.4301 (AISI 304)	EN 1.4401 (AISI 316)		
47	Ring Holder		EN 1.4301 (AISI 304)	EN 1.4401 (AISI 316)		
48	Impeller nut		A2-70 UNI 7323 with inox insert	A4-70 UNI 7323 with inox insert	M10	
52-1	Bearing		Tungsten carbide			
75	O-Ring (plug)		EPDM		D. 12.37x2.62	OR 3050
75-1	O-Ring (plug)		EPDM			
107	Liner ring		EN 1.4301 (AISI 304) + PPS	EN 1.4401 (AISI 316) + PPS		
111	Mechanical Seal		SiC/Carbon/EPDM			
111-3	Mechanical seal seat		EN 1.4301 (AISI 304)	EN 1.4401 (AISI 316)		
111-4	Seal holder		EN 1.4301 (AISI 304)			
111-5	Mechanical seal cartridge		EN 1.4301 (AISI 304)	EN 1.4401 (AISI 316)		
115-1	O-Ring (outer casing)		EPDM		D. 164.46x5.34	OR 6645
115-3	O-Ring		EPDM			
115-4	O-Ring (cartridge sleeve)		EPDM		D. 15.88x2.62	OR 121
115-5	O-Ring (seal cover)		EPDM		D. 37.77x2.62	OR 3150
120-1	Tie-rod		Galvanized steel 6.8 strenght class ISO 898/1		M12	
120-3	Screw		A2-70 UNI 7323		M5x12	ISO 4762
120-6	Screw for coupling	up to 4.0 kW	Galvanized steel		M6x25	ISO 4762
		from 5.5 kW to 7.5 kW			M8x20	ISO 4762
		above 11 kW			M10x30	ISO 4762
120-11	Screw for counterflange		A2-70 UNI 7323			
120-13	Screw for motor	MEC 80	Galvanized steel 8.8 strenght class ISO 898/1		M6x20	ISO 4017
		MEC 90-100-112			M8x20	ISO 4017
		MEC 132			M12x40	ISO 4017
		MEC 160			M16x50	ISO 4017
128-1	Nut for tie rod		Galvanized steel		M12	UNI 5588
128-3	Nut (motor)	MEC 132	Galvanized steel		M12	ISO 4032
		MEC 160			M16	UNI 5588
128-5	Nut for tie rod		Galvanized steel		M12	UNI 7474
130-1	Set screw		A2-70 UNI 7323		M5x8	UNI 5923
130-2	Screw for coupling guard		A2-70 UNI 7323		M5x6	UNI 7687
131-1	Pin for shaft		Carbon Steel		D. 5x35	UNI 4838
135-1	Washer		Galvanized steel		D. 13x24x2.5	UNI 6592
137-1	Impeller spacer		EN 1.4301 (AISI 304)	EN 1.4401 (AISI 316)		
140	Coupling	up to 4.0 kW	Die cast Aluminium EN AB-AISI11Cu2 (Fe)			
		above 5.5 kW	Cast Iron			
160	Base		Die cast Aluminium EN AB-AISI11Cu2 (Fe)			
162	Motor bracket		Cast iron EN-GJL-200-EN 1561			
212	Plug		EN 1.4301 (AISI 304)	EN 1.4401 (AISI 316)	G 3/8	
212-1	Plug		EN 1.4301 (AISI 304)	EN 1.4401 (AISI 316)	G 3/8	
212-2	Venting plug		EN 1.4404 (AISI 316L)			
219	Counter flange		EN 1.4301 (AISI 304)	EN 1.4401 (AISI 316)		
245	Coupling guard		EN 1.4301 (AISI 304)			
273-1	Plug Washer		EN 1.4301 (AISI 304)	EN 1.4401 (AISI 316)		
615	Flange		Nodular Cast Iron			

EBARA Pumps Europe reserves the right to make changes without prior notice

QUANTITY FOR MODEL EVMS(L)10

Pump Type	N°																													
	4	5-1	5-2	5-3	5-4	6	7	21	31	32-1	43-2	43-3	43-6	44-1	45**	46	47	48	52-1	75	75-1	107	111	111-3	111-4	111-5	115-1	115-3*	115-4	115-5
EVMS(L)10 1/0.75	1	1	/	1	1	1	1	1	1	1	/	1	1	1	4	2	1	1	1	1	2	1	1	1	1	1	2	2	1	1
EVMS(L)10 2/1.5	1	1	/	1	1	1	1	2	1	1	/	1	/	1	4	2	1	1	1	1	2	2	1	1	1	1	2	2	1	1
EVMS(L)10 3/2.2	1	1	1	1	1	1	1	3	1	1	3	1	/	1	4	2	1	1	1	1	2	3	1	1	1	1	2	2	1	1
EVMS(L)10 4/3.0	1	1	2	1	1	1	1	4	1	1	5	1	/	1	4	2	1	1	1	1	2	4	1	1	1	1	2	2	1	1
EVMS(L)10 5/4.0	1	1	3	1	1	1	1	5	1	1	7	1	/	1	4	2	1	1	1	1	2	5	1	1	1	1	2	2	1	1
EVMS(L)10 6/4.0	1	1	4	1	1	1	1	6	1	1	9	1	/	1	4	2	1	1	1	1	2	6	1	1	1	1	2	2	1	1
EVMS(L)10 7/5.5	1	1	5	1	1	1	1	7	1	1	11	1	/	1	4	2	1	1	1	1	2	7	1	1	1	1	2	2	1	1
EVMS(L)10 8/5.5	1	1	5	2	1	1	1	8	1	1	11	2	/	2	4	2	1	1	2	1	2	8	1	1	1	1	2	2	1	1
EVMS(L)10 9/5.5	1	1	6	2	1	1	1	9	1	1	13	2	/	2	4	2	1	1	2	1	2	9	1	1	1	1	2	2	1	1
EVMS(L)10 10/7.5	1	1	7	2	1	1	1	10	1	1	15	2	/	2	4	2	1	1	2	1	2	10	1	1	1	1	2	2	1	1
EVMS(L)10 11/7.5	1	1	8	2	1	1	1	11	1	1	17	2	/	2	4	2	1	1	2	1	2	11	1	1	1	1	2	/	1	1
EVMS(L)10 12/7.5	1	1	9	2	1	1	1	12	1	1	19	2	/	2	4	2	1	1	2	1	2	12	1	1	1	1	2	/	1	1
EVMS(L)10 14/11	1	1	11	2	1	1	1	14	1	1	23	2	/	2	4	2	1	1	2	1	2	14	1	1	1	1	2	/	1	1
EVMS(L)10 15/11	1	1	12	2	1	1	1	15	1	1	25	2	/	2	4	2	1	1	2	1	2	15	1	1	1	1	2	/	1	1
EVMS(L)10 16/11	1	1	13	2	1	1	1	16	1	1	27	2	/	2	4	2	1	1	2	1	2	16	1	1	1	1	2	/	1	1

Pump Type	N°																													
	120-1	120-3	120-6	120-11*	120-13	128-1	128-3	128-5	128-6	130-1	130-2	131-1	135-1	135-6	137-1	140	160	162	212	212-1	212-2	219*	245	273-1	615**					
EVMS(L)10 1/0.75	4	4	4	4	4	4	/	4	4	3	4	1	4	4	1	2	1	1	1	2	1	2	2	2	2					
EVMS(L)10 2/1.5	4	4	4	4	4	4	/	4	4	3	4	1	4	4	1	2	1	1	1	2	1	2	2	2	2					
EVMS(L)10 3/2.2	4	4	4	4	4	4	/	4	4	3	4	1	4	4	1	2	1	1	1	2	1	2	2	2	2					
EVMS(L)10 4/3.0	4	4	4	4	4	4	/	4	4	3	4	1	4	4	1	2	1	1	1	2	1	2	2	2	2					
EVMS(L)10 5/4.0	4	4	4	4	4	4	/	4	4	3	4	1	4	4	1	2	1	1	1	2	1	2	2	2	2					
EVMS(L)10 6/4.0	4	4	4	4	4	4	/	4	4	3	4	1	4	4	1	2	1	1	1	2	1	2	2	2	2					
EVMS(L)10 7/5.5	4	4	4	4	4	4	4	4	/	3	4	1	4	/	1	2	1	1	1	2	1	2	2	2	2					
EVMS(L)10 8/5.5	4	4	4	4	4	4	4	4	/	3	4	1	4	/	1	2	1	1	1	2	1	2	2	2	2					
EVMS(L)10 9/5.5	4	4	4	4	4	4	4	4	/	3	4	1	4	/	1	2	1	1	1	2	1	2	2	2	2					
EVMS(L)10 10/7.5	4	4	4	4	4	4	4	4	/	3	4	1	4	/	1	2	1	1	1	2	1	2	2	2	2					
EVMS(L)10 11/7.5	4	4	4	/	4	4	4	4	/	3	4	1	4	/	1	2	1	1	1	2	1	/	2	2	2					
EVMS(L)10 12/7.5	4	4	4	/	4	4	4	4	/	3	4	1	4	/	1	2	1	1	1	2	1	/	2	2	2					
EVMS(L)10 14/11	4	4	4	/	4	4	4	4	/	3	4	1	4	/	1	2	1	1	1	2	1	/	2	2	2					
EVMS(L)10 15/11	4	4	4	/	4	4	4	4	/	3	4	1	4	/	1	2	1	1	1	2	1	/	2	2	2					
EVMS(L)10 16/11	4	4	4	/	4	4	4	4	/	3	4	1	4	/	1	2	1	1	1	2	1	/	2	2	2					

* only for Oval flange (N)
** only for Loose round flange (LF)
128-6 / 135-6: with Aluminium coupling (see drawing pag.211)

EBARA Pumps Europe reserves the right to make changes without prior notice

PERFORMANCE CURVE
EVMSG10

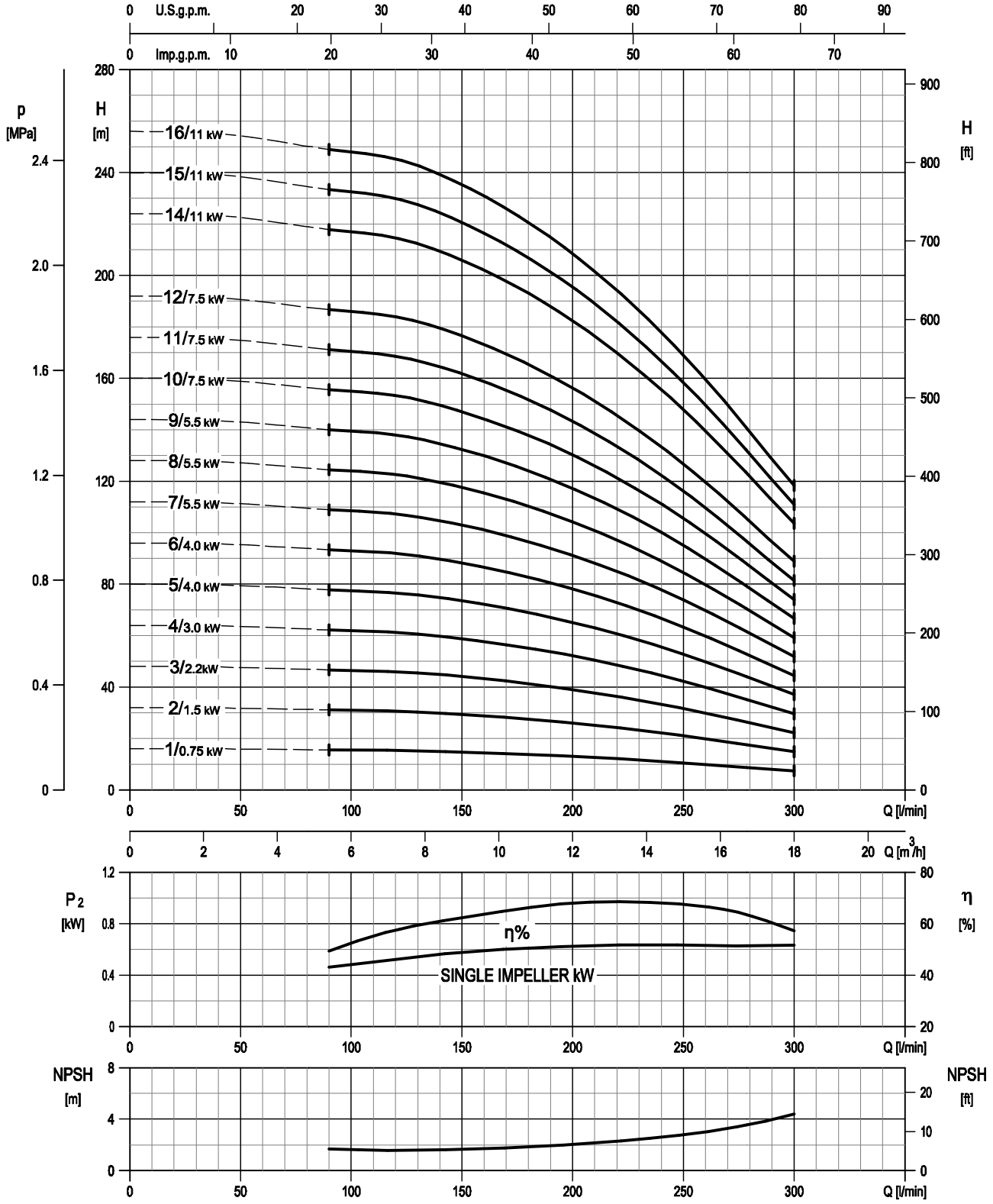

Rotation speed ≈3500 min-1
Test standard: ISO 9906:2012 - Grade 3B

EBARA Pumps Europe

EBARA Pumps Europe reserves the right to make changes without prior notice

TECHNICAL DATA
EVMSG10

Dimensional sketch

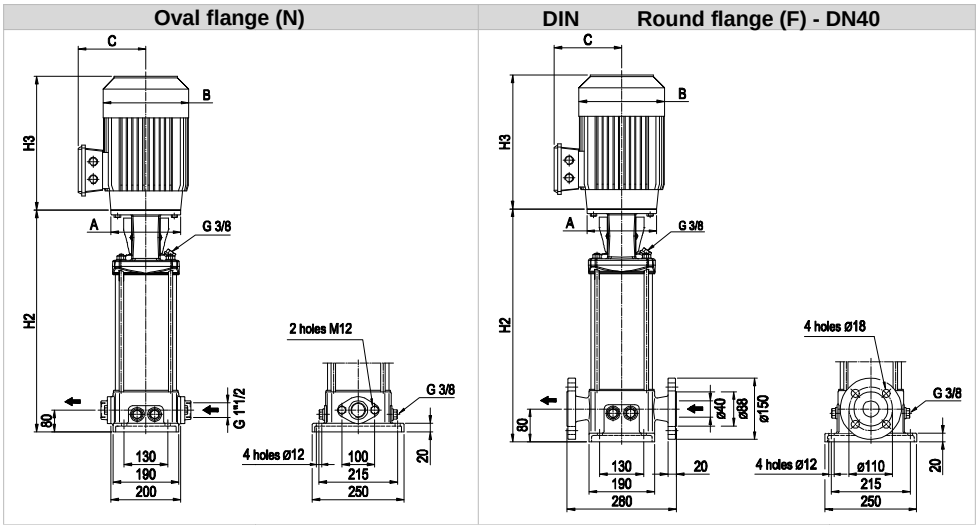

Dimensions [mm] and Weights [Kg]

Pump Type	Pmax [MPa]	Motor kW	Size	A	3 ~ B	C	H3	Oval flange (N) H2	Weight Pump	Weight Pump + Motor	Round flange (F) H2	Weight Pump	Weight Pump + Motor
EVMSG10 1/0.75	1.6	0.75	80	ø120	160	139	232	343	20.3	29.8	343	24.1	33.6
EVMSG10 2/1.5	1.6	1.5	90 S	ø140	180	148	267	353	20.5	34.5	353	24.3	38.3
EVMSG10 3/2.2	1.6	2.2	90 L	ø140	180	148	267	383	21.4	37.4	383	25.2	41.2
EVMSG10 4/3.0	1.6	3.0	100 L	ø160	196	155	306	423	22.3	45.1	423	26.1	48.9
EVMSG10 5/4.0	1.6	4.0	112 M	ø160	196	155	306	453	23.2	49.7	453	27	53.5
EVMSG10 6/4.0	1.6	4.0	112 M	ø160	196	155	306	483	24	50.5	483	27.8	54.3
EVMSG10 7/5.5	1.6	5.5	132 S	ø300	225	160	328	611	31.9	70.5	611	35.7	74.3
EVMSG10 8/5.5	1.6	5.5	132 S	ø300	225	160	328	641	33.1	71.7	641	36.9	75.5
EVMSG10 9/5.5	1.6	5.5	132 S	ø300	225	160	328	671	33.9	72.5	671	37.7	76.3
EVMSG10 10/7.5	1.6	7.5	132 S	ø300	225	160	328	701	34.8	75.2	701	38.6	79
EVMSG10 11/7.5	2.5	7.5	132 S	ø300	225	160	328	-	-	-	731	40.2	80.6
EVMSG10 12/7.5	2.5	7.5	132 S	ø300	225	160	328	-	-	-	761	41.1	81.5
EVMSG10 14/11	2.5	11	160 M	ø350	248	194	476	-	-	-	851	51.1	113.6
EVMSG10 15/11	2.5	11	160 M	ø350	248	194	476	-	-	-	881	52.1	114.6
EVMSG10 16/11	2.5	11	160 M	ø350	248	194	476	-	-	-	911	53	115.5

1.6 MPa=16 bar ; 2.5 MPa=25 bar
- not available model

EBARA Pumps Europe reserves the right to make changes without prior notice

SECTIONAL VIEW
EVMSG10

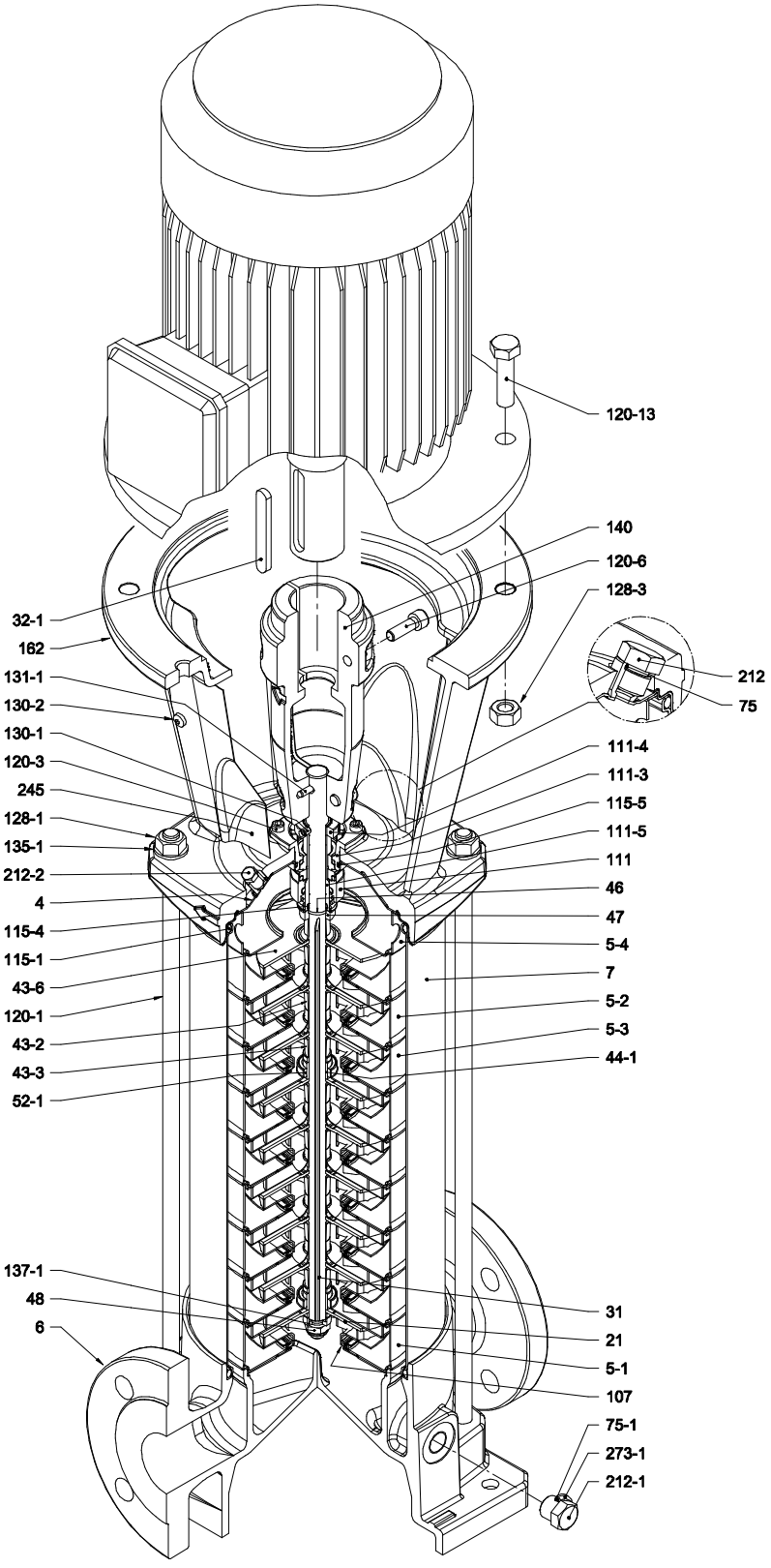

with Round flange (F)

EBARA Pumps Europe

EBARA Pumps Europe reserves the right to make changes without prior notice

PIPE CONNECTION
EVMSG10

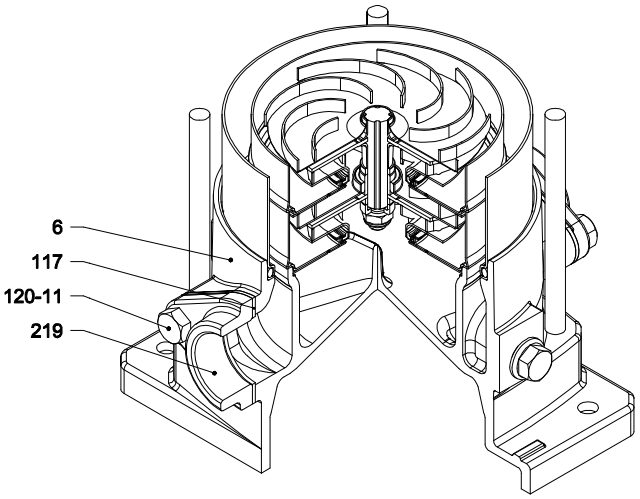

with Oval flange (N)

EBARA Pumps Europe reserves the right to make changes without prior notice

SECTIONAL TABLE
EVMSG10

N°	PART NAME		MATERIAL EVMSG	DIMENSIONS	STANDARD
4	Casing cover		EN 1.4301 (AISI 304)		
5-1	Suction casing		EN 1.4301 (AISI 304)		
5-2	Intermediate Casing		EN 1.4301 (AISI 304)		
5-3	Intermediate casing bearing		EN 1.4301 (AISI 304)		
5-4	Discharge casing		EN 1.4301 (AISI 304)		
6	Bottom casing		Cast Iron EN GJL-250-EN1561		
7	Outer casing		EN 1.4301 (AISI 304)		
21	Impeller		EN 1.4301 (AISI 304)		
31	Shaft		EN 1.4301 (AISI 304)		
32-1	Adjuster Key		EN 1.4301 (AISI 304)		
43-2	Shaft sleeve (intermediate)		EN 1.4301 (AISI 304)		
43-3	Shaft sleeve (bearing)		EN 1.4301 (AISI 304)		
43-6	Washer		EN 1.4404 (AISI 316L)	D. 26x1.2	
44-1	Shaft sleeve bearing		Tungsten carbide		
46	Ring (mechanical seal)		EN 1.4301 (AISI 304)		
47	Ring Holder		EN 1.4301 (AISI 304)		
48	Impeller nut		A2-70 UNI 7323 with inox insert	M10	
52-1	Bearing		Tungsten carbide		
75	O-Ring (plug)		EPDM	D. 12.37x2.62	OR 3050
75-1	O-Ring (plug)		EPDM		
107	Liner ring		EN 1.4301 (AISI 304) + PPS		
111	Mechanical Seal		SiC/Carbon/EPDM		
111-3	Mechanical seal seat		EN 1.4301 (AISI 304)		
111-4	Seal holder		EN 1.4301 (AISI 304)		
111-5	Mechanical seal cartridge		EN 1.4301 (AISI 304)		
115-1	O-Ring (outer casing)		EPDM	D. 164.46x5.34	OR 6645
115-4	O-Ring (cartridge sleeve)		EPDM	D. 15.88x2.62	OR 121
115-5	O-Ring (seal cover)		EPDM	D. 37.77x2.62	OR 3150
117	Flange gasket		EPDM		
120-1	Tie-rod		Galvanized steel 6.8 strenght class ISO 898/1	M12	
120-3	Screw		A2-70 UNI 7323	M5x12	ISO 4762
120-6	Screw for coupling	up to 4.0 kW	Galvanized steel	M6x25	ISO 4762
		from 5.5 kW to 7.5 kW		M8x20	ISO 4762
		above 11 kW		M10x30	ISO 4762
120-11	Screw for counterflange		A2-70 UNI 7323		
120-13	Screw for motor	MEC 80	Galvanized steel 8.8 strenght class ISO 898/1	M6x20	ISO 4017
		MEC 90-100-112		M8x20	ISO 4017
		MEC 132		M12x40	ISO 4017
		MEC 160		M16x50	ISO 4017
128-1	Nut for tie rod		Galvanized steel	M12	UNI 5588
128-3	Nut (motor)	MEC 132	Galvanized steel	M12	ISO 4032
		MEC 160		M16	UNI 5588
130-1	Set screw		A2-70 UNI 7323	M5x8	UNI 5923
130-2	Screw for coupling guard		A2-70 UNI 7323	M5x6	UNI 7687
131-1	Pin for shaft		Carbon Steel	D. 5x35	UNI 4838
135-1	Washer		Galvanized steel	D. 13x24x2.5	UNI 6592
137-1	Impeller spacer		EN 1.4301 (AISI 304)		
140	Coupling	up to 4.0 kW	Die cast Aluminium EN AB-AISI11Cu2 (Fe)		
		above 5.5 kW	Cast Iron		
162	Motor bracket		Cast iron EN-GJL-200-EN 1561		
212	Plug		EN 1.4301 (AISI 304)	G 3/8	
212-1	Plug		EN 1.4301 (AISI 304)	G 3/8	
212-2	Venting plug		EN 1.4404 (AISI 316L)		
219	Counter flange		Galvanized steel		
245	Coupling guard		EN 1.4301 (AISI 304)		
273-1	Plug Washer		EN 1.4301 (AISI 304)		

EBARA Pumps Europe reserves the right to make changes without prior notice

QUANTITY FOR MODEL EVMSG10

Pump Type	N°																											
	4	5-1	5-2	5-3	5-4	6	7	21	31	32-1	43-2	43-3	43-6	44-1	46	47	48	52-1	75	75-1	107	111	111-3	111-4	111-5	115-1	115-4	115-5
EVMSG10 1/0.75	1	1	/	1	1	1	1	1	1	1	/	1	1	1	2	1	1	1	1	4	1	1	1	1	1	2	1	1
EVMSG10 2/1.5	1	1	/	1	1	1	1	2	1	1	/	1	/	1	2	1	1	1	1	4	2	1	1	1	1	2	1	1
EVMSG10 3/2.2	1	1	1	1	1	1	1	3	1	1	3	1	/	1	2	1	1	1	1	4	3	1	1	1	1	2	1	1
EVMSG10 4/3.0	1	1	2	1	1	1	1	4	1	1	5	1	/	1	2	1	1	1	1	4	4	1	1	1	1	2	1	1
EVMSG10 5/4.0	1	1	3	1	1	1	1	5	1	1	7	1	/	1	2	1	1	1	1	4	5	1	1	1	1	2	1	1
EVMSG10 6/4.0	1	1	4	1	1	1	1	6	1	1	9	1	/	1	2	1	1	1	1	4	6	1	1	1	1	2	1	1
EVMSG10 7/5.5	1	1	5	1	1	1	1	7	1	1	11	1	/	1	2	1	1	1	1	4	7	1	1	1	1	2	1	1
EVMSG10 8/5.5	1	1	5	2	1	1	1	8	1	1	11	2	/	2	2	1	1	2	1	4	8	1	1	1	1	2	1	1
EVMSG10 9/5.5	1	1	6	2	1	1	1	9	1	1	13	2	/	2	2	1	1	2	1	4	9	1	1	1	1	2	1	1
EVMSG10 10/7.5	1	1	7	2	1	1	1	10	1	1	15	2	/	2	2	1	1	2	1	4	10	1	1	1	1	2	1	1
EVMSG10 11/7.5	1	1	8	2	1	1	1	11	1	1	17	2	/	2	2	1	1	2	1	4	11	1	1	1	1	2	1	1
EVMSG10 12/7.5	1	1	9	2	1	1	1	12	1	1	19	2	/	2	2	1	1	2	1	4	12	1	1	1	1	2	1	1
EVMSG10 14/11	1	1	11	2	1	1	1	14	1	1	23	2	/	2	2	1	1	2	1	4	14	1	1	1	1	2	1	1
EVMSG10 15/11	1	1	12	2	1	1	1	15	1	1	25	2	/	2	2	1	1	2	1	4	15	1	1	1	1	2	1	1
EVMSG10 16/11	1	1	13	2	1	1	1	16	1	1	27	2	/	2	2	1	1	2	1	4	16	1	1	1	1	2	1	1

Pump Type	N°																								
	117*	120-1	120-3	120-6	120-11*	120-13	128-1	128-3	128-6	130-1	130-2	131-1	135-1	135-6	137-1	140	162	212	212-1	212-2	219*	245	273-1
EVMSG10 1/0.75	2	4	4	4	4	4	4	/	4	3	4	1	4	4	1	2	1	1	4	1	2	2	4
EVMSG10 2/1.5	2	4	4	4	4	4	4	/	4	3	4	1	4	4	1	2	1	1	4	1	2	2	4
EVMSG10 3/2.2	2	4	4	4	4	4	4	/	4	3	4	1	4	4	1	2	1	1	4	1	2	2	4
EVMSG10 4/3.0	2	4	4	4	4	4	4	/	4	3	4	1	4	4	1	2	1	1	4	1	2	2	4
EVMSG10 5/4.0	2	4	4	4	4	4	4	/	4	3	4	1	4	4	1	2	1	1	4	1	2	2	4
EVMSG10 6/4.0	2	4	4	4	4	4	4	/	4	3	4	1	4	4	1	2	1	1	4	1	2	2	4
EVMSG10 7/5.5	2	4	4	4	4	4	4	4	/	3	4	1	4	/	1	2	1	1	4	1	2	2	4
EVMSG10 8/5.5	2	4	4	4	4	4	4	4	/	3	4	1	4	/	1	2	1	1	4	1	2	2	4
EVMSG10 9/5.5	2	4	4	4	4	4	4	4	/	3	4	1	4	/	1	2	1	1	4	1	2	2	4
EVMSG10 10/7.5	2	4	4	4	4	4	4	4	/	3	4	1	4	/	1	2	1	1	4	1	2	2	4
EVMSG10 11/7.5	/	4	4	4	/	4	4	4	/	3	4	1	4	/	1	2	1	1	4	1	/	2	4
EVMSG10 12/7.5	/	4	4	4	/	4	4	4	/	3	4	1	4	/	1	2	1	1	4	1	/	2	4
EVMSG10 14/11	/	4	4	4	/	4	4	4	/	3	4	1	4	/	1	2	1	1	4	1	/	2	4
EVMSG10 15/11	/	4	4	4	/	4	4	4	/	3	4	1	4	/	1	2	1	1	4	1	/	2	4
EVMSG10 16/11	/	4	4	4	/	4	4	4	/	3	4	1	4	/	1	2	1	1	4	1	/	2	4

* only for Oval flange (N)
128-6 / 135-6: with Aluminium coupling (see drawing pag.211)

EBARA Pumps Europe reserves the right to make changes without prior notice

PERFORMANCE CURVE
EVMS(L)15

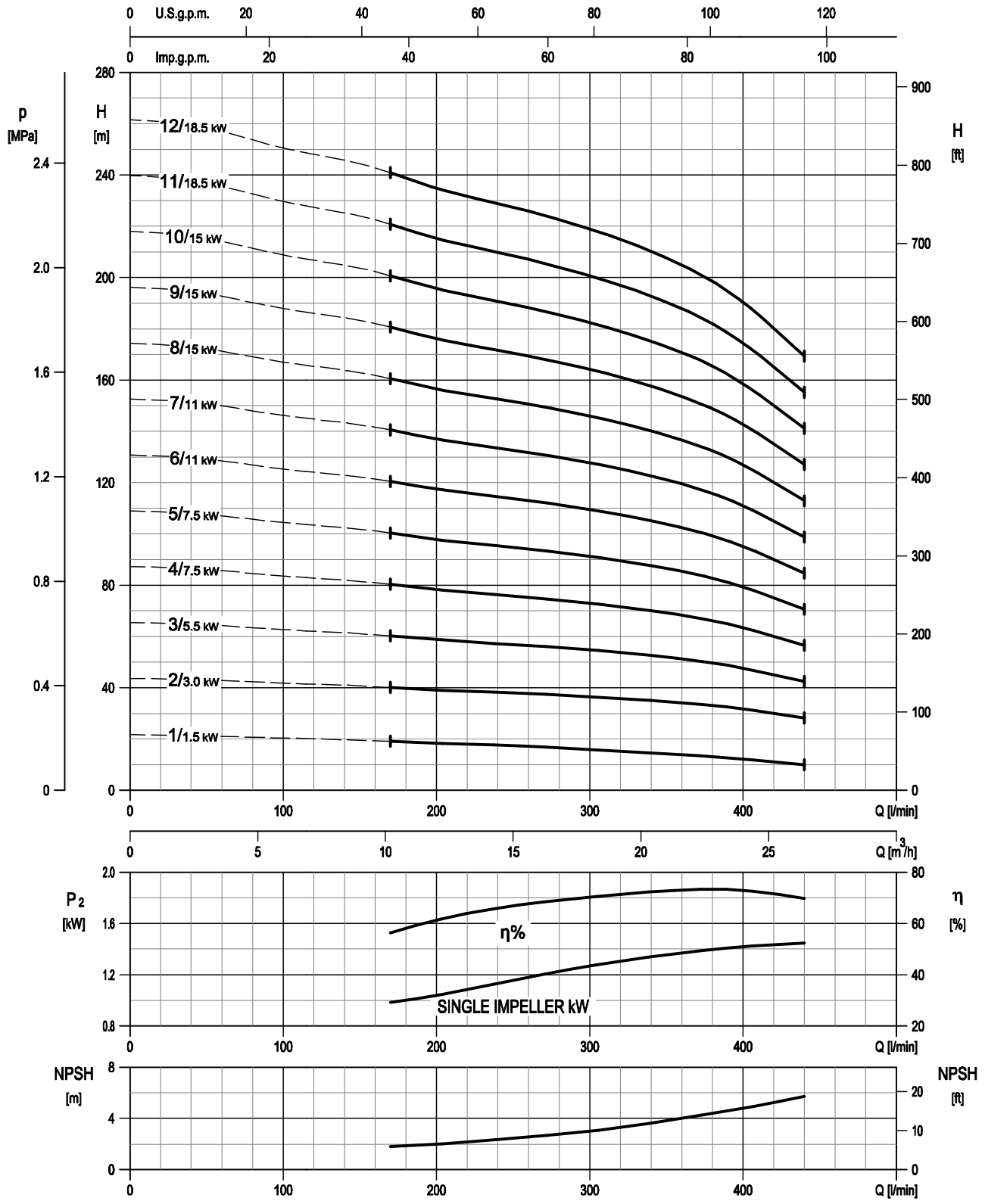

Rotation speed ≈3500 min-1
Test standard: ISO 9906:2012 - Grade 3B

EBARA Pumps Europe reserves the right to make changes without prior notice

TECHNICAL DATA
EVMS(L)15

Dimensional sketch

Oval flange (N)

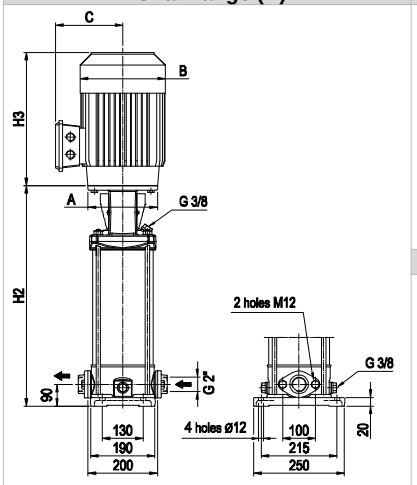

DIN Loose round flange (LF) - DN50

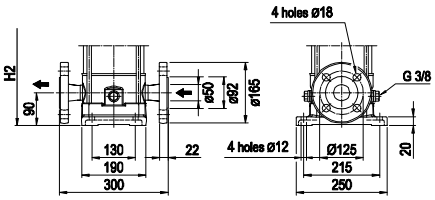

Victaulic® connection (V)

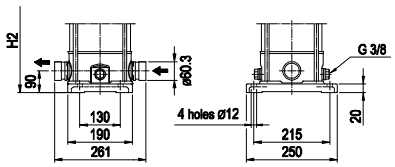

DIN Round flange (F) - DN50

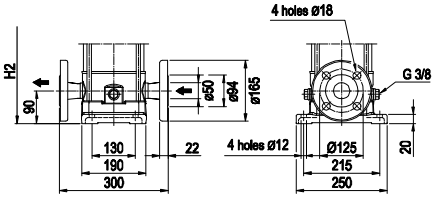

Clamp connection (C)

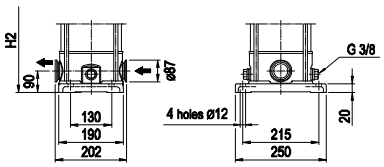

Dimensions [mm] and Weights [Kg]

Pump Type	Pmax [MPa]	Motor kW	Size	A	3 ~ B	C	H3	Oval flange (N) H2	Weight Pump	Weight Pump + Motor	Loose round flange (LF) Round flange (F) H2	Weight Pump	Weight Pump + Motor	Victaulic® connection (V) Clamp connection (C) H2	Weight Pump	Weight Pump + Motor
EVMS(L)15 1/1.5	1.6	1.5	90 S	ø140	180	148	267	387	16.9	29.6	387	18.8	31.5	387	16.9	29.6
EVMS(L)15 2/3	1.6	3.0	100 L	ø160	196	155	306	397	17.3	40.1	397	19.1	41.9	397	17.2	40
EVMS(L)15 3/5.5	1.6	5.5	132 S	ø300	225	160	328	534	25.5	64.1	534	27.4	66	534	25.5	64.1
EVMS(L)15 4/7.5	1.6	7.5	132 S	ø300	225	160	350	574	26.7	67.1	574	28.6	69	574	26.7	67.1
EVMS(L)15 5/7.5	1.6	7.5	132 S	ø300	225	160	350	614	27.8	68.2	614	29.7	70.1	614	27.8	68.2
EVMS(L)15 6/11	1.6	11	160 M	ø350	248	194	476	684	37.7	100.2	684	39.5	102	684	37.6	100.1
EVMS(L)15 7/11	1.6	11	160 M	ø350	248	194	476	724	39.5	102	724	41.4	103.9	724	39.5	102
EVMS(L)15 8/15	2.5	15	160 M	ø350	317	238	498	-	-	-	764	42.7	131.6	764	40.8	129.7
EVMS(L)15 9/15	2.5	15	160 M	ø350	317	238	498	-	-	-	804	44	132.9	804	42.1	131
EVMS(L)15 10/15	2.5	15	160 M	ø350	317	238	498	-	-	-	844	45.3	134.2	844	43.4	132.3
EVMS(L)15 11/18.5	2.5	18.5	160 L	ø350	317	238	542	-	-	-	884	46.6	150.6	884	44.7	148.7
EVMS(L)15 12/18.5	2.5	18.5	160 L	ø350	317	238	542	-	-	-	924	47.9	151.9	924	46	150

1.6 MPa=16 bar ; 2.5 MPa=25 bar
- not available model

EBARA Pumps Europe reserves the right to make changes without prior notice

SECTIONAL VIEW
EVMS(L)15

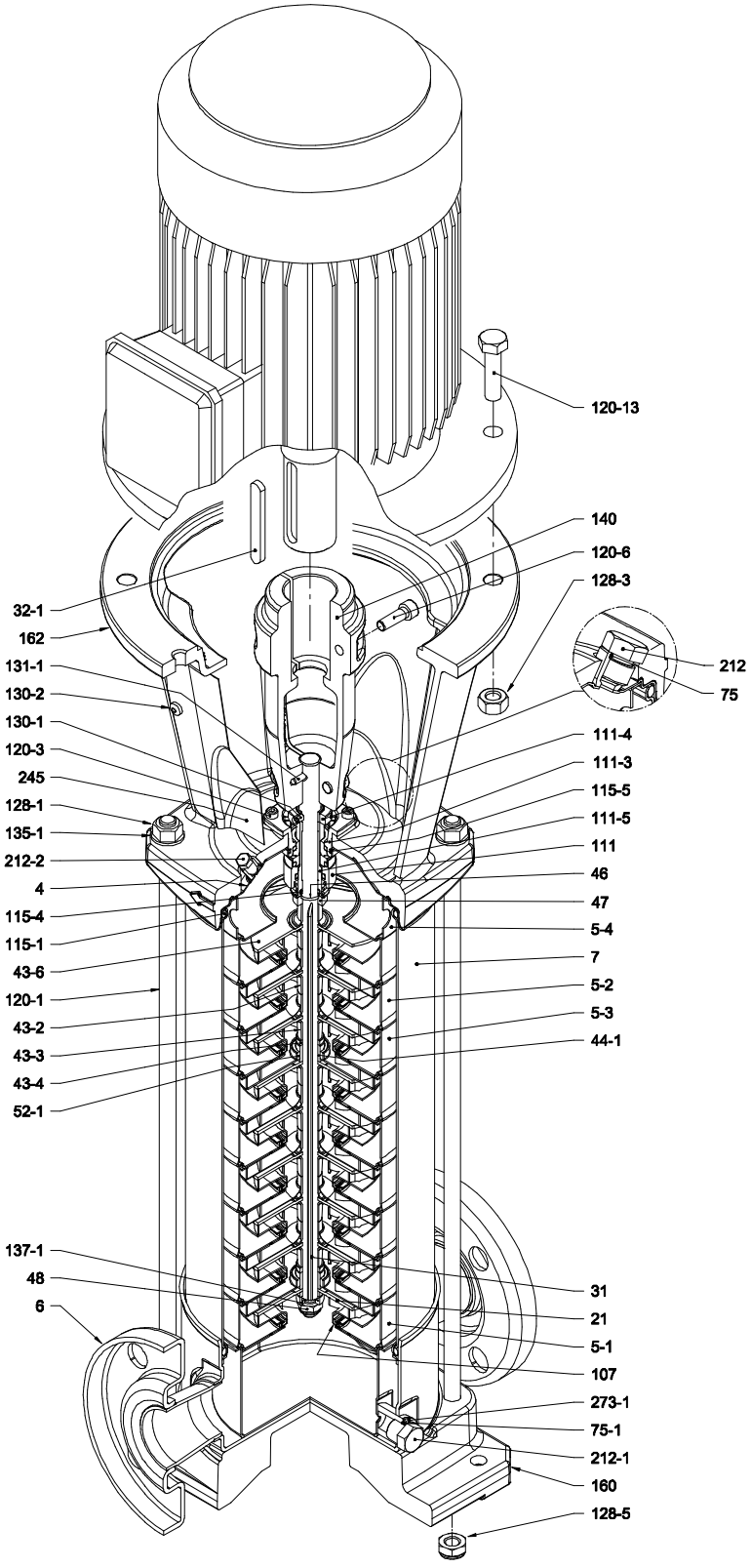

with Round flange (F)

EBARA Pumps Europe reserves the right to make changes without prior notice

PIPE CONNECTION
EVMS(L)15

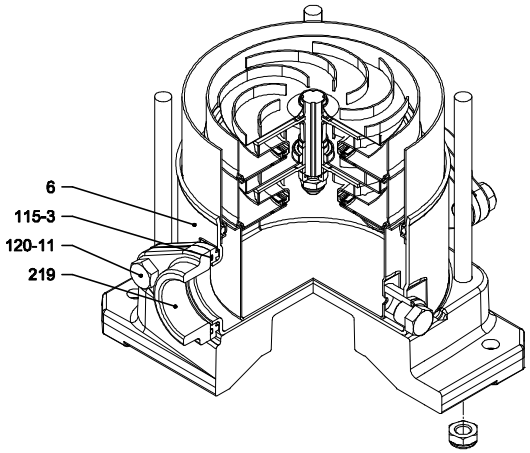

with Oval flange (N)

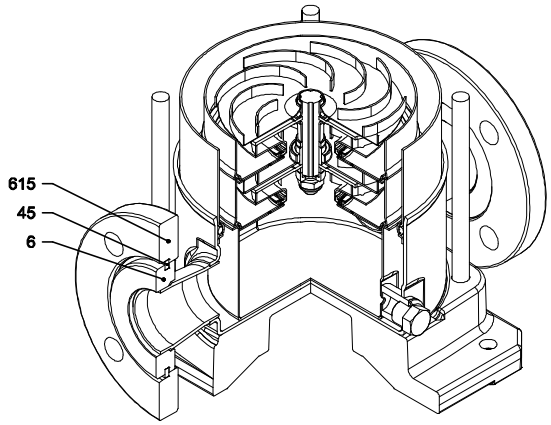

with Loose round flange (LF)

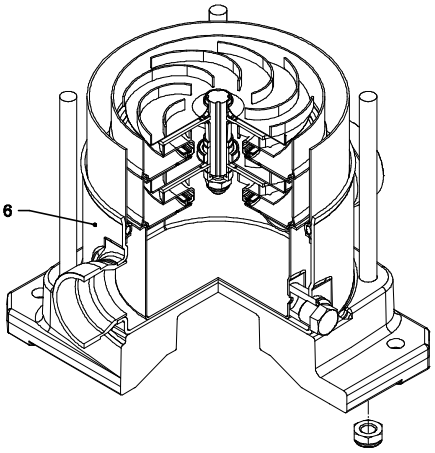

with Victaulic® connection (V)

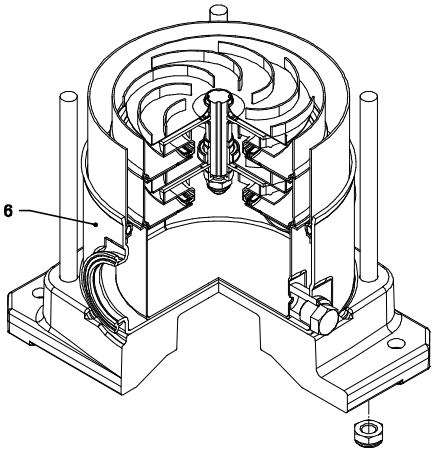

with Clamp connection (C)

EBARA Pumps Europe reserves the right to make changes without prior notice

SECTIONAL TABLE
EVMS(L)15

N°	PART NAME		MATERIAL EVMS	MATERIAL EVMSL	DIMENSIONS	STANDARD
4	Casing cover		EN 1.4301 (AISI 304)	EN 1.4401 (AISI 316)		
5-1	Suction casing		EN 1.4301 (AISI 304)	EN 1.4401 (AISI 316)		
5-2	Intermediate Casing		EN 1.4301 (AISI 304)	EN 1.4401 (AISI 316)		
5-3	Intermediate casing bearing		EN 1.4301 (AISI 304)	EN 1.4401 (AISI 316)		
5-4	Discharge casing		EN 1.4301 (AISI 304)	EN 1.4401 (AISI 316)		
6	Bottom casing		EN 1.4308 (AISI 304)	EN 1.4408 (AISI 316)		
7	Outer casing		EN 1.4301 (AISI 304)	EN 1.4404 (AISI 316L)		
21	Impeller		EN 1.4301 (AISI 304)	EN 1.4401 (AISI 316)		
31	Shaft		EN 1.4301 (AISI 304) - EN 1.4462 (AISI 329A)	EN 1.4404 (AISI 316L) - EN 1.4462 (AISI 329A)		
32-1	Adjuster Key		EN 1.4301 (AISI 304)			
43-2	Shaft sleeve (intermediate)		EN 1.4301 (AISI 304)	EN 1.4401 (AISI 316L)		
43-3	Shaft sleeve (bearing)		EN 1.4301 (AISI 304)	EN 1.4401 (AISI 316)		
43-4	Shaft sleeve (adjustment)		EN 1.4301 (AISI 304)	EN 1.4401 (AISI 316)		
43-6	Washer		EN 1.4404 (AISI 316L)		D. 26x1.2	
44-1	Shaft sleeve bearing		Tungsten carbide			
45	Flange holder		EN 1.4301 (AISI 304)			
46	Ring (mechanical seal)		EN 1.4301 (AISI 304)	EN 1.4401 (AISI 316)		
47	Ring Holder		EN 1.4301 (AISI 304)	EN 1.4401 (AISI 316)		
48	Impeller nut		A2-70 UNI 7323 with inox insert	A4-70 UNI 7323 with inox insert	M10	
52-1	Bearing		Tungsten carbide			
75	O-Ring (plug)		EPDM		D. 12.37x2.62	OR 3050
75-1	O-Ring (plug)		EPDM			
107	Liner ring		EN 1.4301 (AISI 304) + PPS	EN 1.4401 (AISI 316) + PPS		
111	Mechanical Seal		SiC/Carbon/EPDM			
111-3	Mechanical seal seat		EN 1.4301 (AISI 304)	EN 1.4401 (AISI 316)		
111-4	Seal holder		EN 1.4301 (AISI 304)			
111-5	Mechanical seal cartridge		EN 1.4301 (AISI 304)	EN 1.4401 (AISI 316)		
115-1	O-Ring (outer casing)		EPDM		D. 164.46x5.34	OR 6645
115-3	O-Ring		EPDM			
115-4	O-Ring (cartridge sleeve)		EPDM		D. 15.88x2.62	OR 121
115-5	O-Ring (seal cover)		EPDM		D. 37.77x2.62	OR 3150
120-1	Tie-rod		Galvanized steel 6.8 strenght class ISO 898/1		M12	
120-3	Screw		A2-70 UNI 7323		M5x12	ISO 4762
120-6	Screw for coupling	up to 4.0 kW	Galvanized steel		M6x25	ISO 4762
		from 5.5 kW to 7.5 kW			M8x20	ISO 4762
		above 11 kW			M10x30	ISO 4762
120-11	Screw for counterflange		A2-70 UNI 7323			
120-13	Screw for motor	MEC 90-100-112	Galvanized steel 8.8 strenght class ISO 898/1		M8x20	ISO 4017
		MEC 132			M12x40	ISO 4017
		MEC 160			M16x50	ISO 4017
128-1	Nut for tie rod		Galvanized steel		M12	UNI 5588
128-3	Nut (motor)	MEC 132	Galvanized steel		M12	ISO 4032
		MEC 160			M16	UNI 5588
128-5	Nut for tie rod		Galvanized steel		M12	UNI 7474
130-1	Set screw		A2-70 UNI 7323		M5x8	UNI 5923
130-2	Screw for coupling guard		A2-70 UNI 7323		M5x6	UNI 7687
131-1	Pin for shaft		Carbon Steel		D. 5x35	UNI 4838
135-1	Washer		Galvanized steel		D. 13x24x2.5	UNI 6592
137-1	Impeller spacer		EN 1.4301 (AISI 304)	EN 1.4401 (AISI 316)		
140	Coupling	up to 4.0 kW	Die cast Aluminium EN AB-AISI11Cu2 (Fe)			
		above 5.5 kW	Cast Iron			
160	Base		Die cast Aluminium EN AB-AISI11Cu2 (Fe)			
162	Motor bracket		Cast iron EN-GJL-200-EN 1561			
212	Plug		EN 1.4301 (AISI 304)	EN 1.4401 (AISI 316)	G 3/8	
212-1	Plug		EN 1.4301 (AISI 304)	EN 1.4401 (AISI 316)	G 3/8	
212-2	Venting plug		EN 1.4404 (AISI 316L)			
219	Counter flange		EN 1.4301 (AISI 304)	EN 1.4401 (AISI 316)		
245	Coupling guard		EN 1.4301 (AISI 304)			
273-1	Plug Washer		EN 1.4301 (AISI 304)	EN 1.4401 (AISI 316)		
615	Flange		Carbon steel			

EBARA Pumps Europe reserves the right to make changes without prior notice

QUANTITY FOR MODEL EVMS(L)15

Pump Type	N°																														
	4	5-1	5-2	5-3	5-4	6	7	21	31***	32-1	43-2	43-3	43-4	43-6	44-1	45**	46	47	48	52-1	75	75-1	107	111	111-3	111-4	111-5	115-1	115-3*	115-4	115-5
EVMS(L)15 1/1.5	1	1	/	1	1	1	1	1	1	1	/	1	1	1	1	4	2	1	1	1	1	2	1	1	1	1	1	2	2	1	1
EVMS(L)15 2/3	1	1	/	1	1	1	1	2	1	1	/	1	1	/	1	4	2	1	1	1	1	2	2	1	1	1	1	2	2	1	1
EVMS(L)15 3/5.5	1	1	1	1	1	1	1	3	1	1	3	1	1	/	1	4	2	1	1	1	1	2	3	1	1	1	1	2	2	1	1
EVMS(L)15 4/7.5	1	1	2	1	1	1	1	4	1	1	5	1	1	/	1	4	2	1	1	1	1	2	4	1	1	1	1	2	2	1	1
EVMS(L)15 5/7.5	1	1	3	1	1	1	1	5	1	1	7	1	1	/	1	4	2	1	1	1	1	2	5	1	1	1	1	2	2	1	1
EVMS(L)15 6/11	1	1	3	2	1	1	1	6	1	1	7	2	2	/	2	4	2	1	1	2	1	2	6	1	1	1	1	2	2	1	1
EVMS(L)15 7/11	1	1	4	2	1	1	1	7	1	1	9	2	2	/	2	4	2	1	1	2	1	2	7	1	1	1	1	2	2	1	1
EVMS(L)15 8/15	1	1	5	2	1	1	1	8	1	1	11	2	2	/	2	4	2	1	1	2	1	2	8	1	1	1	1	2	/	1	1
EVMS(L)15 9/15	1	1	6	2	1	1	1	9	1	1	13	2	2	/	2	4	2	1	1	2	1	2	9	1	1	1	1	2	/	1	1
EVMS(L)15 10/15	1	1	7	2	1	1	1	10	1	1	15	2	2	/	2	4	2	1	1	2	1	2	10	1	1	1	1	2	/	1	1
EVMS(L)15 11/18.5	1	1	8	2	1	1	1	11	1	1	17	2	2	/	2	4	2	1	1	2	1	2	11	1	1	1	1	2	/	1	1
EVMS(L)15 12/18.5	1	1	9	2	1	1	1	12	1	1	19	2	2	/	2	4	2	1	1	2	1	2	12	1	1	1	1	2	/	1	1

Pump Type	N°																												
	120-1	120-3	120-6	120-11*	120-13	128-1	128-3	128-5	128-6	130-1	130-2	131-1	135-1	135-6	137-1	140	160	162	212	212-1	212-2	219*	245	273-1	615**
EVMS(L)15 1/1.5	4	4	4	4	4	4	/	4	4	3	4	1	4	4	1	2	1	1	1	2	1	2	2	2	2
EVMS(L)15 2/3	4	4	4	4	4	4	/	4	4	3	4	1	4	4	1	2	1	1	1	2	1	2	2	2	2
EVMS(L)15 3/5.5	4	4	4	4	4	4	4	4	/	3	4	1	4	/	1	2	1	1	1	2	1	2	2	2	2
EVMS(L)15 4/7.5	4	4	4	4	4	4	4	4	/	3	4	1	4	/	1	2	1	1	1	2	1	2	2	2	2
EVMS(L)15 5/7.5	4	4	4	4	4	4	4	4	/	3	4	1	4	/	1	2	1	1	1	2	1	2	2	2	2
EVMS(L)15 6/11	4	4	4	4	4	4	4	4	/	3	4	1	4	/	1	2	1	1	1	2	1	2	2	2	2
EVMS(L)15 7/11	4	4	4	4	4	4	4	4	/	3	4	1	4	/	1	2	1	1	1	2	1	2	2	2	2
EVMS(L)15 8/15	4	4	4	/	4	4	4	4	/	3	4	1	4	/	1	2	1	1	1	2	1	/	2	2	2
EVMS(L)15 9/15	4	4	4	/	4	4	4	4	/	3	4	1	4	/	1	2	1	1	1	2	1	/	2	2	2
EVMS(L)15 10/15	4	4	4	/	4	4	4	4	/	3	4	1	4	/	1	2	1	1	1	2	1	/	2	2	2
EVMS(L)15 11/18.5	4	4	4	/	4	4	4	4	/	3	4	1	4	/	1	2	1	1	1	2	1	/	2	2	2
EVMS(L)15 12/18.5	4	4	4	/	4	4	4	4	/	3	4	1	4	/	1	2	1	1	1	2	1	/	2	2	2

* only for Oval flange (N)
** only for Loose round flange (LF)
*** ▭ shaft in EN 1.4462 (AISI 329A)
128-6 / 135-6: with Aluminium coupling (see drawing pag.211)

EBARA Pumps Europe reserves the right to make changes without prior notice

PERFORMANCE CURVE
EVMSG15

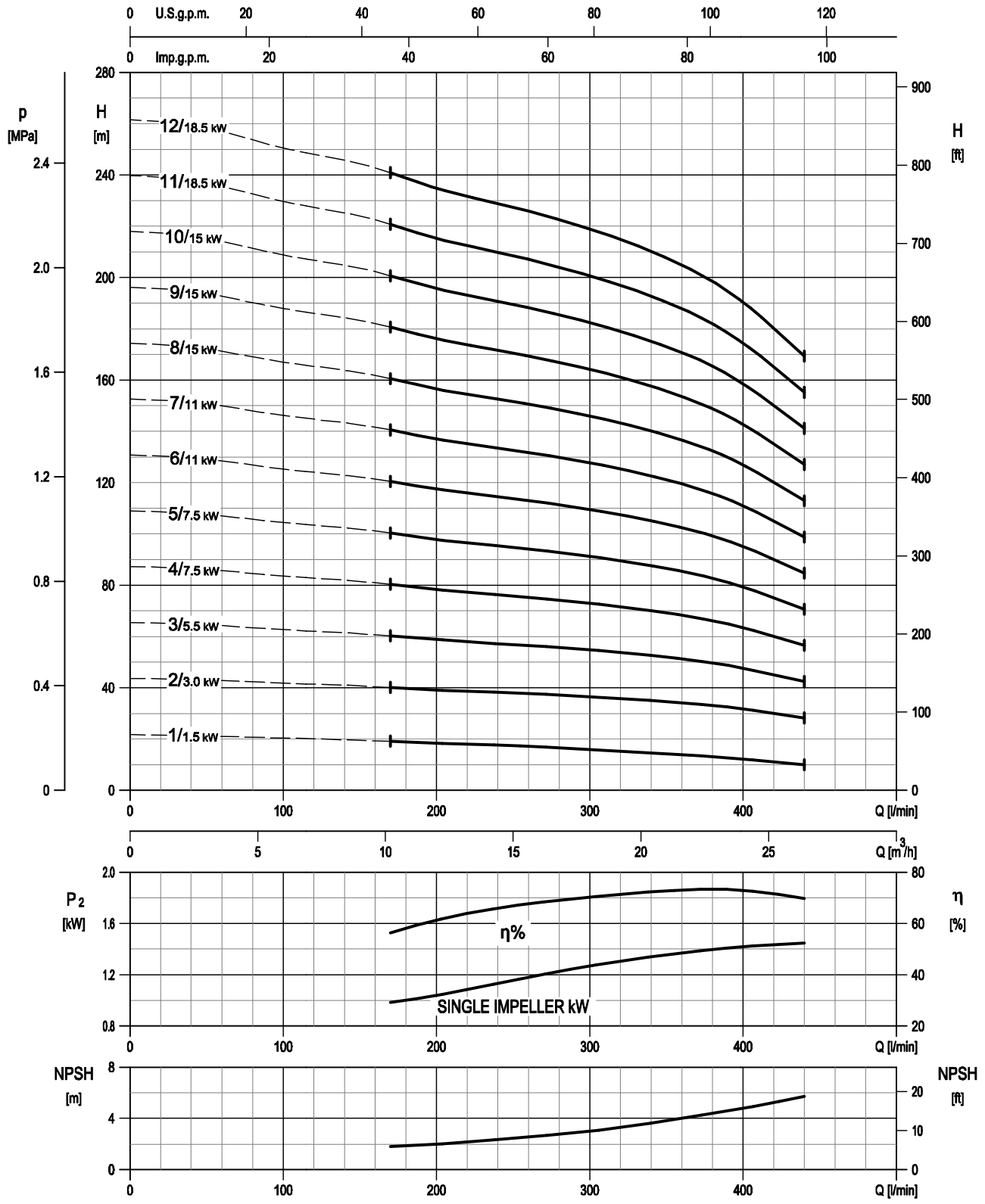

Rotation speed ≈3500 min-1
Test standard: ISO 9906:2012 - Grade 3B

EBARA Pumps Europe

EBARA Pumps Europe reserves the right to make changes without prior notice

TECHNICAL DATA
EVMSG15

Dimensional sketch

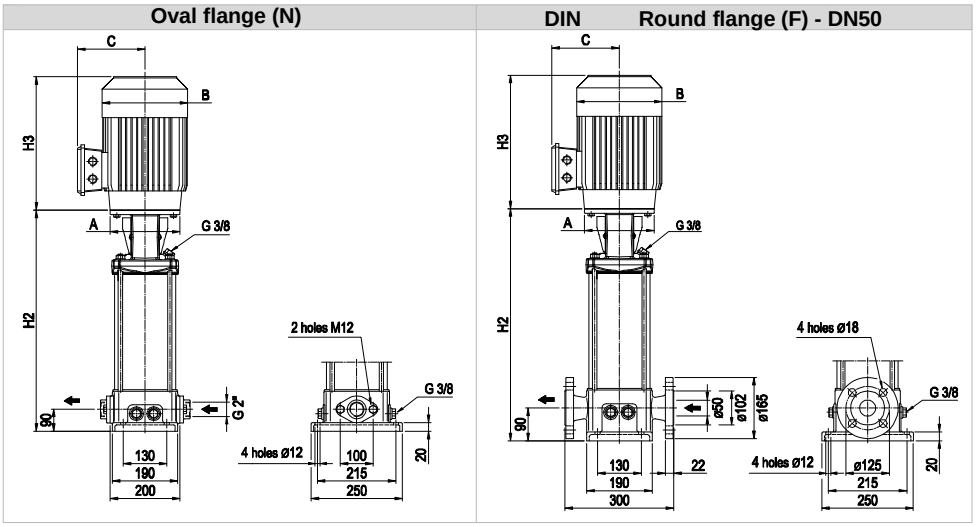

Dimensions [mm] and Weights [Kg]

Pump Type	Pmax [MPa]	Motor kW	Size	A	3 ~ B	C	H3	Oval flange (N) H2	Weight Pump	Weight Pump + Motor	Round flange (F) H2	Weight Pump	Weight Pump + Motor
EVMSG15 1/1.5	1.6	1.5	90 S	ø140	180	148	267	387	21.2	33.9	387	26.9	39.6
EVMSG15 2/3	1.6	3.0	100 L	ø160	196	155	306	397	21.6	44.4	397	27.3	50.1
EVMSG15 3/5.5	1.6	5.5	132 S	ø300	225	160	328	534	29.8	68.4	534	35.5	74.1
EVMSG15 4/7.5	1.6	7.5	132 S	ø300	225	160	350	574	31	71.4	574	36.7	77.1
EVMSG15 5/7.5	1.6	7.5	132 S	ø300	225	160	350	614	32.1	72.5	614	37.8	78.2
EVMSG15 6/11	1.6	11	160 M	ø350	248	194	476	684	42	104.5	684	47.7	110.2
EVMSG15 7/11	1.6	11	160 M	ø350	248	194	476	724	43.8	106.3	724	49.5	112
EVMSG15 8/15	2.5	15	160 M	ø350	317	238	498	-	-	-	764	50.8	139.7
EVMSG15 9/15	2.5	15	160 M	ø350	317	238	498	-	-	-	804	52.1	141
EVMSG15 10/15	2.5	15	160 M	ø350	317	238	498	-	-	-	844	53.4	142.3
EVMSG15 11/18.5	2.5	18.5	160 L	ø350	317	238	542	-	-	-	884	54.7	158.7
EVMSG15 12/18.5	2.5	18.5	160 L	ø350	317	238	542	-	-	-	924	56	160

1.6 MPa=16 bar ; 2.5 MPa=25 bar
- not available model

EBARA Pumps Europe reserves the right to make changes without prior notice

SECTIONAL VIEW
EVMSG15

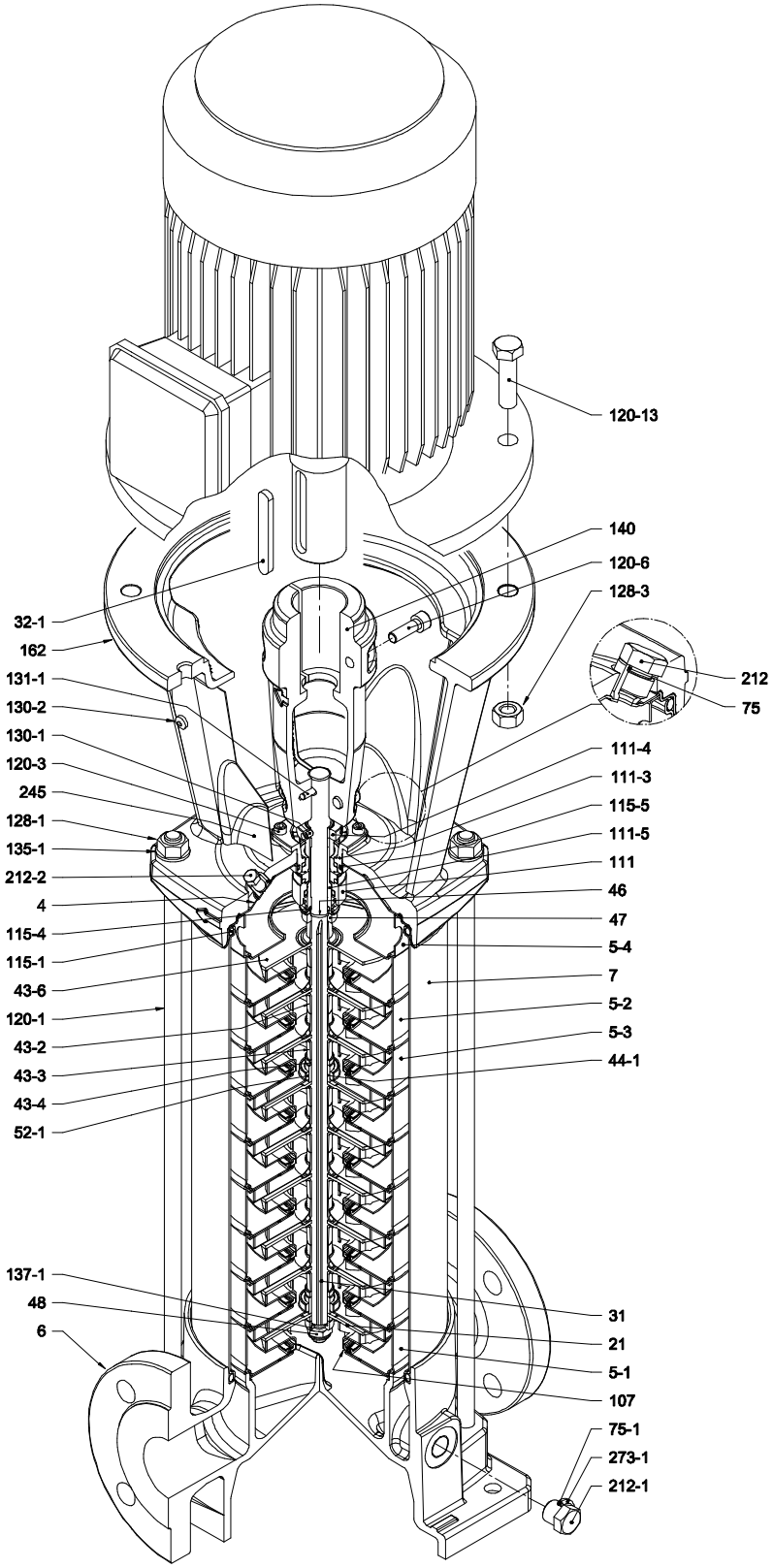

with Round flange (F)

EBARA Pumps Europe

EBARA Pumps Europe reserves the right to make changes without prior notice

PIPE CONNECTION
EVMSG15

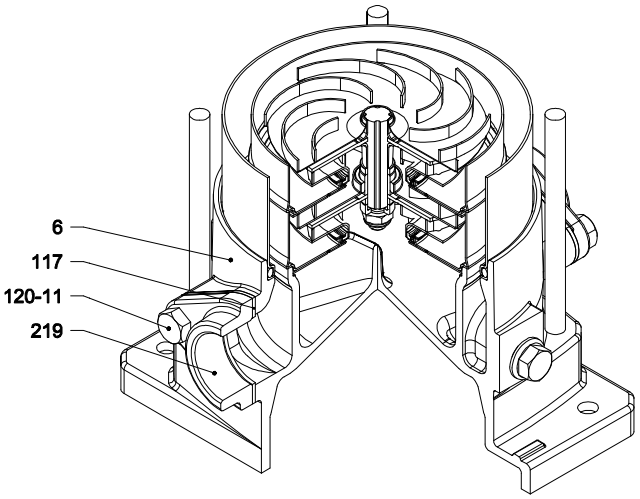

with Oval flange (N)

EBARA Pumps Europe reserves the right to make changes without prior notice

SECTIONAL TABLE
EVMSG15

N°	PART NAME		MATERIAL EVMSG	DIMENSIONS	STANDARD
4	Casing cover		EN 1.4301 (AISI 304)		
5-1	Suction casing		EN 1.4301 (AISI 304)		
5-2	Intermediate Casing		EN 1.4301 (AISI 304)		
5-3	Intermediate casing bearing		EN 1.4301 (AISI 304)		
5-4	Discharge casing		EN 1.4301 (AISI 304)		
6	Bottom casing		Cast Iron EN GJL-250-EN1561		
7	Outer casing		EN 1.4301 (AISI 304)		
21	Impeller		EN 1.4301 (AISI 304)		
31	Shaft		EN 1.4301 (AISI 304) - EN 1.4462 (AISI 329A)		
32-1	Adjuster Key		EN 1.4301 (AISI 304)		
43-2	Shaft sleeve (intermediate)		EN 1.4301 (AISI 304)		
43-3	Shaft sleeve (bearing)		EN 1.4301 (AISI 304)		
43-4	Shaft sleeve (adjustment)		EN 1.4301 (AISI 304)		
43-6	Washer		EN 1.4404 (AISI 316L)	D. 26x1.2	
44-1	Shaft sleeve bearing		Tungsten carbide		
46	Ring (mechanical seal)		EN 1.4301 (AISI 304)		
47	Ring Holder		EN 1.4301 (AISI 304)		
48	Impeller nut		A2-70 UNI 7323 with inox insert	M10	
52-1	Bearing		Tungsten carbide		
75	O-Ring (plug)		EPDM	D. 12.37x2.62	OR 3050
75-1	O-Ring (plug)		EPDM		
107	Liner ring		EN 1.4301 (AISI 304) + PPS		
111	Mechanical Seal		SiC/Carbon/EPDM		
111-3	Mechanical seal seat		EN 1.4301 (AISI 304)		
111-4	Seal holder		EN 1.4301 (AISI 304)		
111-5	Mechanical seal cartridge		EN 1.4301 (AISI 304)		
115-1	O-Ring (outer casing)		EPDM	D. 164.46x5.34	OR 6645
115-4	O-Ring (cartridge sleeve)		EPDM	D. 15.88x2.62	OR 121
115-5	O-Ring (seal cover)		EPDM	D. 37.77x2.62	OR 3150
117	Flange gasket		EPDM		
120-1	Tie-rod		Galvanized steel 6.8 strenght class ISO 898/1	M12	
120-3	Screw		A2-70 UNI 7323	M5x12	ISO 4762
120-6	Screw for coupling	up to 4.0 kW	Galvanized steel 6.8 strenght class ISO 898/1	M6x25	ISO 4762
		from 5.5 kW to 7.5 kW		M8x20	ISO 4762
		above 11 kW		M10x30	ISO 4762
120-11	Screw for counterflange		A2-70 UNI 7323		
120-13	Screw for motor	MEC 90-100-112	Galvanized steel 8.8 strenght class ISO 898/1	M8x20	ISO 4017
		MEC 132		M12x40	ISO 4017
		MEC 160		M16x50	ISO 4017
128-1	Nut for tie rod		Galvanized steel	M12	UNI 5588
128-3	Nut (motor)	MEC 132	Galvanized steel	M12	ISO 4032
		MEC 160		M16	UNI 5588
130-1	Set screw		A2-70 UNI 7323	M5x8	UNI 5923
130-2	Screw for coupling guard		A2-70 UNI 7323	M5x6	UNI 7687
131-1	Pin for shaft		Carbon Steel	D. 5x35	UNI 4838
135-1	Washer		Galvanized steel	D. 13x24x2,5	UNI 6592
137-1	Impeller spacer		EN 1.4301 (AISI 304)		
140	Coupling	up to 4.0 kW	Die cast Aluminium EN AB-AISI11Cu2 (Fe)		
		above 5.5 kW	Cast Iron		
162	Motor bracket		Cast iron EN-GJL-200-EN 1561		
212	Plug		EN 1.4301 (AISI 304)	G 3/8	
212-1	Plug		EN 1.4301 (AISI 304)	G 3/8	
212-2	Venting plug		EN 1.4404 (AISI 316L)		
219	Counter flange		Galvanized steel		
245	Coupling guard		EN 1.4301 (AISI 304)		
273-1	Plug Washer		EN 1.4301 (AISI 304)		

EBARA Pumps Europe reserves the right to make changes without prior notice

QUANTITY FOR MODEL EVMSG15

Pump Type	N°																											
	4	5-1	5-2	5-3	5-4	6	7	21	31***	32-1	43-2	43-3	43-4	43-6	44-1	46	47	48	52-1	75	75-1	107	111	111-3	111-4	111-5	115-1	115-4	115-5
EVMSG15 1/1.5	1	1	/	1	1	1	1	1	1	1	/	1	1	1	1	2	1	1	1	1	4	1	1	1	1	1	2	1	1
EVMSG15 2/3	1	1	/	1	1	1	1	2	1	1	/	1	1	/	1	2	1	1	1	1	4	2	1	1	1	1	2	1	1
EVMSG15 3/5.5	1	1	1	1	1	1	1	3	1	1	3	1	1	/	1	2	1	1	1	1	4	3	1	1	1	1	2	1	1
EVMSG15 4/7.5	1	1	2	1	1	1	1	4	1	1	5	1	1	/	1	2	1	1	1	1	4	4	1	1	1	1	2	1	1
EVMSG15 5/7.5	1	1	3	1	1	1	1	5	1	1	7	1	1	/	1	2	1	1	1	1	4	5	1	1	1	1	2	1	1
EVMSG15 6/11	1	1	3	2	1	1	1	6	1	1	7	2	2	/	2	2	1	1	2	1	4	6	1	1	1	1	2	1	1
EVMSG15 7/11	1	1	4	2	1	1	1	7	1	1	9	2	2	/	2	2	1	1	2	1	4	7	1	1	1	1	2	1	1
EVMSG15 8/15	1	1	5	2	1	1	1	8	1	1	11	2	2	/	2	2	1	1	2	1	4	8	1	1	1	1	2	1	1
EVMSG15 9/15	1	1	6	2	1	1	1	9	1	1	13	2	2	/	2	2	1	1	2	1	4	9	1	1	1	1	2	1	1
EVMSG15 10/15	1	1	7	2	1	1	1	10	1	1	15	2	2	/	2	2	1	1	2	1	4	10	1	1	1	1	2	1	1
EVMSG15 11/18.5	1	1	8	2	1	1	1	11	1	1	17	2	2	/	2	2	1	1	2	1	4	11	1	1	1	1	2	1	1
EVMSG15 12/18.5	1	1	9	2	1	1	1	12	1	1	19	2	2	/	2	2	1	1	2	1	4	12	1	1	1	1	2	1	1

Pump Type	N°																								
	117*	120-1	120-3	120-6	120-11*	120-13	128-1	128-3	128-6	130-1	130-2	131-1	135-1	135-6	137-1	140	162	212	212-1	212-2	219*	245	273-1
EVMSG15 1/1.5	2	4	4	4	4	4	4	/	4	3	4	1	4	4	1	2	1	1	4	1	2	2	4
EVMSG15 2/3	2	4	4	4	4	4	4	/	4	3	4	1	4	4	1	2	1	1	4	1	2	2	4
EVMSG15 3/5.5	2	4	4	4	4	4	4	4	/	3	4	1	4	/	1	2	1	1	4	1	2	2	4
EVMSG15 4/7.5	2	4	4	4	4	4	4	4	/	3	4	1	4	/	1	2	1	1	4	1	2	2	4
EVMSG15 5/7.5	2	4	4	4	4	4	4	4	/	3	4	1	4	/	1	2	1	1	4	1	2	2	4
EVMSG15 6/11	2	4	4	4	4	4	4	4	/	3	4	1	4	/	1	2	1	1	4	1	2	2	4
EVMSG15 7/11	2	4	4	4	4	4	4	4	/	3	4	1	4	/	1	2	1	1	4	1	2	2	4
EVMSG15 8/15	/	4	4	4	/	4	4	4	/	3	4	1	4	/	1	2	1	1	4	1	/	2	4
EVMSG15 9/15	/	4	4	4	/	4	4	4	/	3	4	1	4	/	1	2	1	1	4	1	/	2	4
EVMSG15 10/15	/	4	4	4	/	4	4	4	/	3	4	1	4	/	1	2	1	1	4	1	/	2	4
EVMSG15 11/18.5	/	4	4	4	/	4	4	4	/	3	4	1	4	/	1	2	1	1	4	1	/	2	4
EVMSG15 12/18.5	/	4	4	4	/	4	4	4	/	3	4	1	4	/	1	2	1	1	4	1	/	2	4

* only for Oval flange (N)
*** ▭ shaft in EN 1.4462 (AISI 329A)
128-6 / 135-6: with Aluminium coupling (see drawing pag.211)

EBARA Pumps Europe reserves the right to make changes without prior notice

VERTICAL MULTISTAGE PUMPS EVMS

PERFORMANCE CURVE
EVMS(L)20

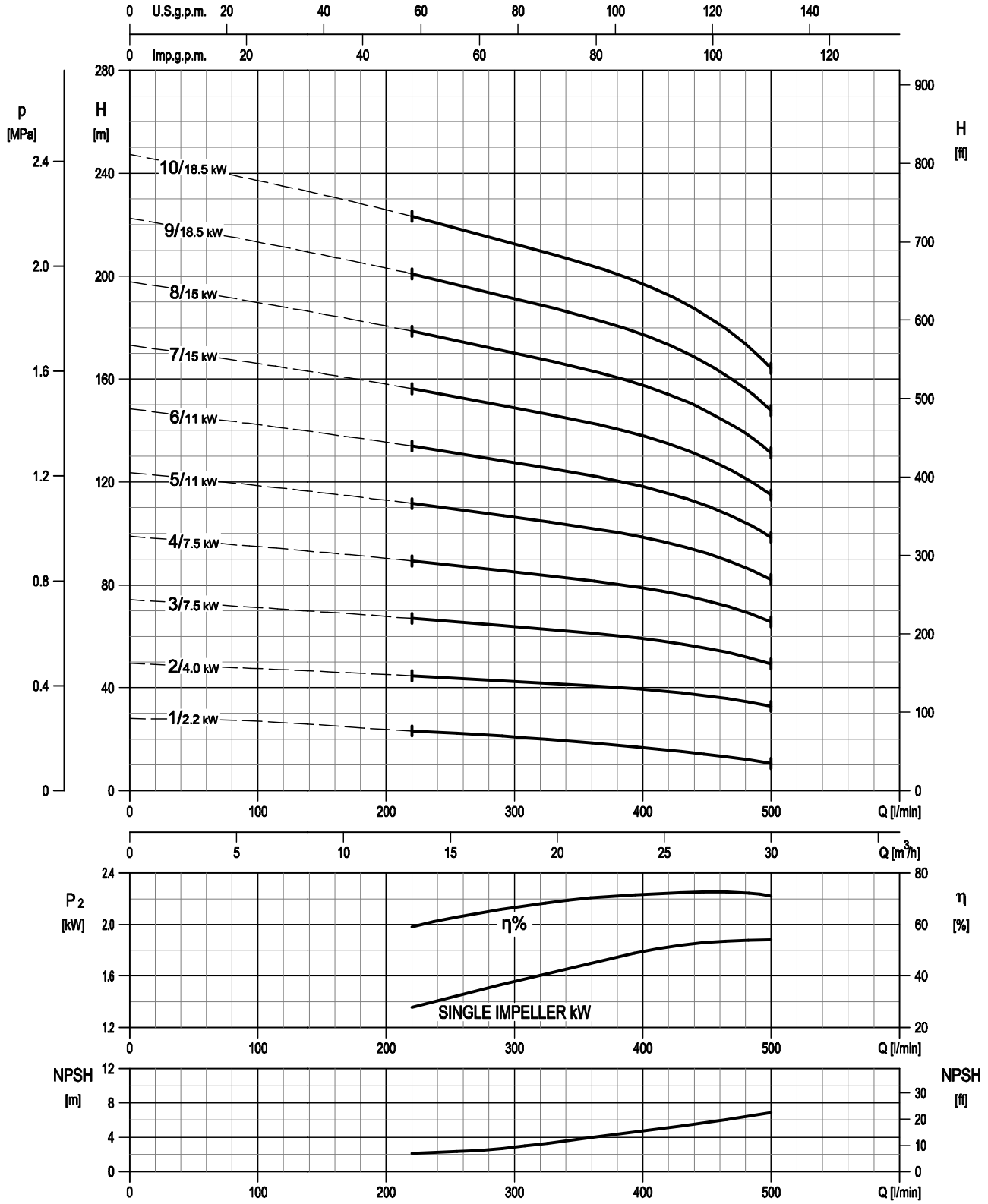

Rotation speed ≈3500 min-1
Test standard: ISO 9906:2012 - Grade 3B

EBARA Pumps Europe reserves the right to make changes without prior notice

TECHNICAL DATA
EVMS(L)20

Dimensional sketch

Oval flange (N)

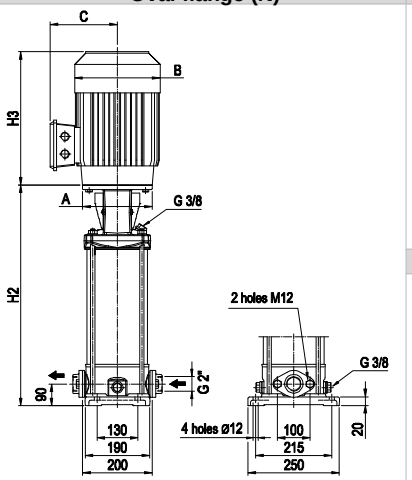

DIN Loose round flange (LF) - DN50

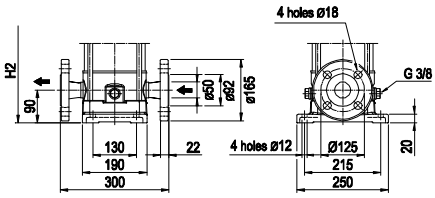

Victaulic® connection (V)

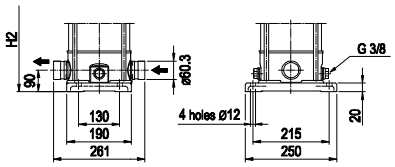

DIN Round flange (F) - DN50

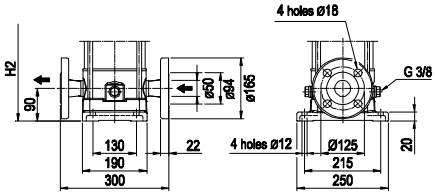

Clamp connection (C)

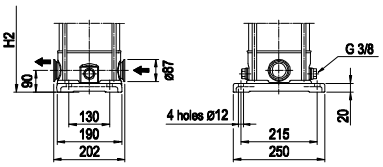

Dimensions [mm] and Weights [Kg]

Pump Type	Pmax [MPa]	Motor kW	Size	A	3 ~ B	C	H3	Oval flange (N) H2	Weight Pump	Weight Pump + Motor	Loose round flange (LF) Round flange (F) H2	Weight Pump	Weight Pump + Motor	Victaulic® connection (V) Clamp connection (C) H2	Weight Pump	Weight Pump + Motor
EVMS(L)20 1/2.2	1.6	2.2	90 L	ø140	180	148	267	387	16.9	32.9	387	18.7	34.7	387	16.8	32.8
EVMS(L)20 2/4.0	1.6	4.0	112 M	ø160	196	155	306	397	17.3	43.8	397	19.1	45.6	397	17.2	43.7
EVMS(L)20 3/7.5	1.6	7.5	132 S	ø300	225	160	350	534	25.5	65.9	534	27.4	68	534	25.5	65.9
EVMS(L)20 4/7.5	1.6	7.5	132 S	ø300	225	160	350	574	26.8	67.2	574	28.6	69	574	26.7	67.1
EVMS(L)20 5/11	1.6	11	160 M	ø350	248	194	476	644	36.2	98.7	644	38	100.5	644	36.1	98.6
EVMS(L)20 6/11	1.6	11	160 M	ø350	248	194	476	684	36.4	98.9	684	38.3	100.8	684	36.4	98.9
EVMS(L)20 7/15	2.5	15	160 M	ø350	317	238	498	-	-	-	724	41.2	130.1	724	39.3	128.2
EVMS(L)20 8/15	2.5	15	160 M	ø350	317	238	498	-	-	-	764	42.5	131.4	764	40.6	129.5
EVMS(L)20 9/18.5	2.5	18.5	160 L	ø350	317	238	542	-	-	-	804	43.9	147.9	804	42	146
EVMS(L)20 10/18.5	2.5	18.5	160 L	ø350	317	238	542	-	-	-	844	45.2	149.2	844	43.3	147.3

1.6 MPa=16 bar ; 2.5 MPa=25 bar
- not available model

EBARA Pumps Europe reserves the right to make changes without prior notice

SECTIONAL VIEW
EVMS(L)20

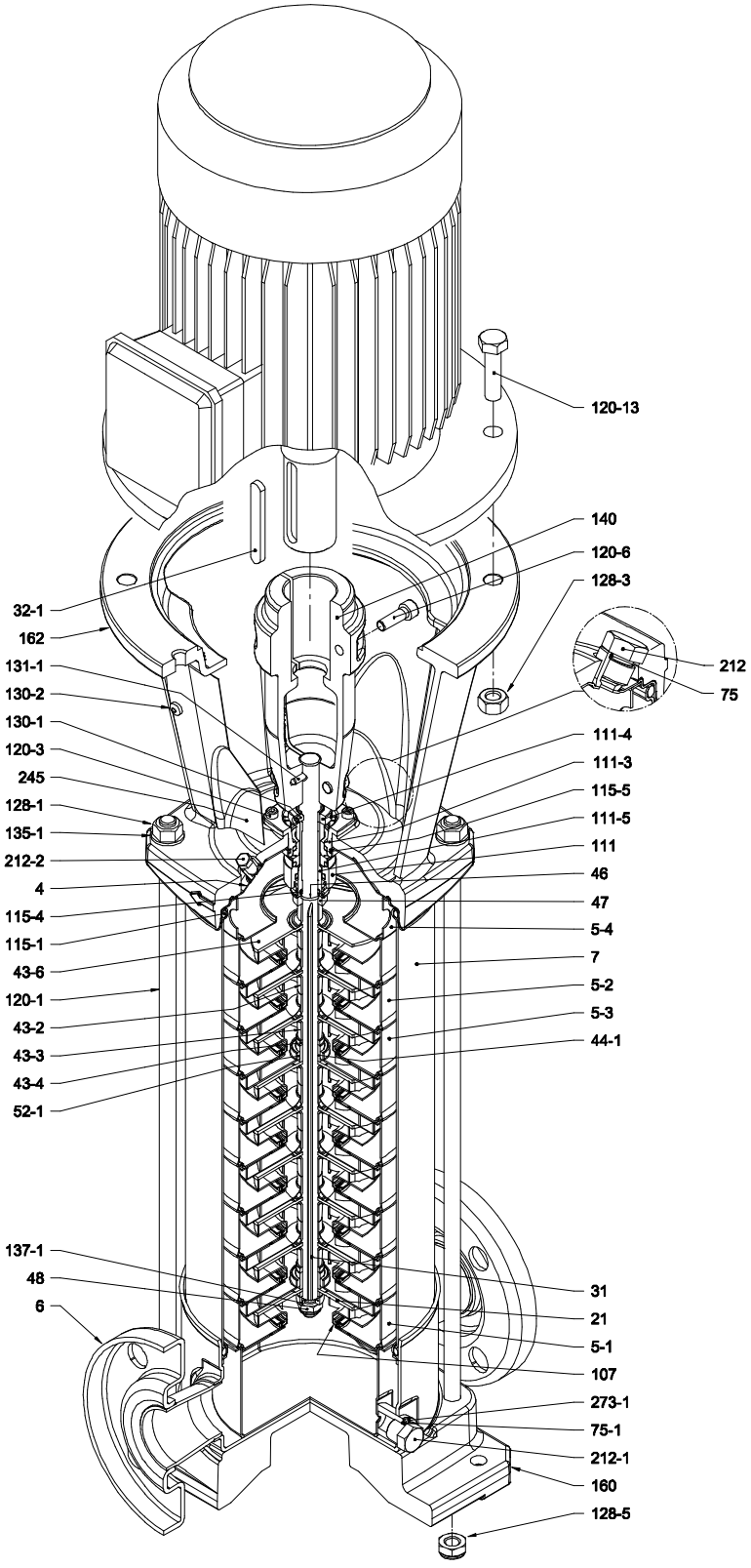

with Round flange (F)

EBARA Pumps Europe reserves the right to make changes without prior notice

PIPE CONNECTION
EVMS(L)20

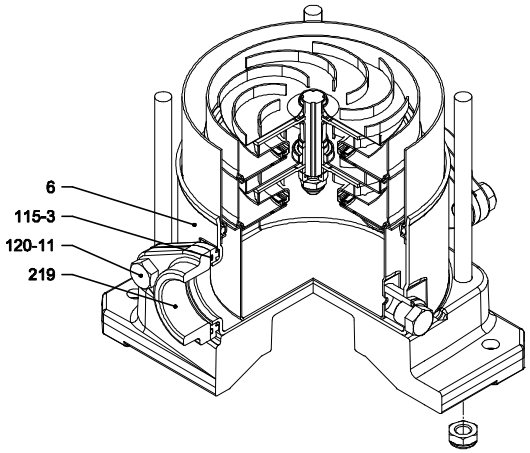

with Oval flange (N)

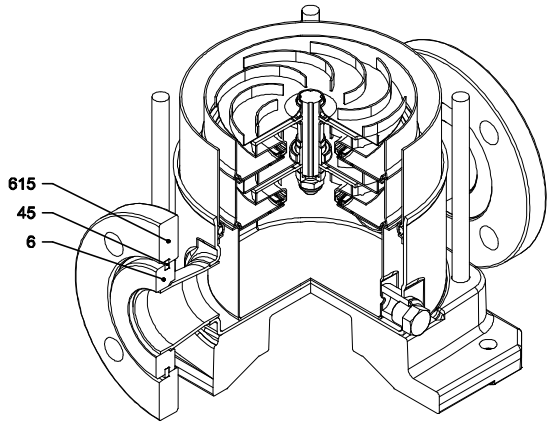

with Loose round flange (LF)

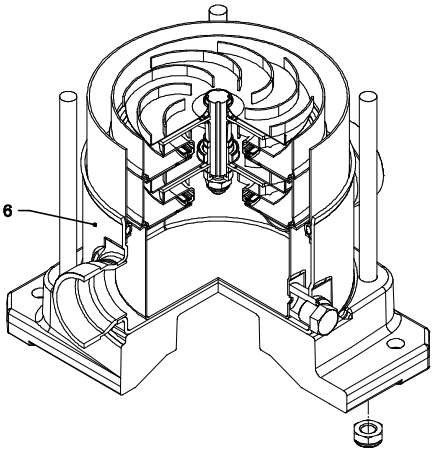

with Victaulic® connection (V)

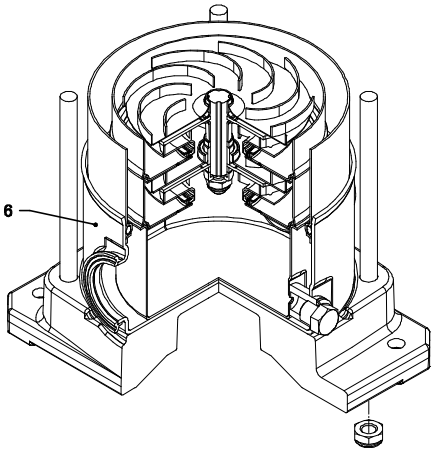

with Clamp connection (C)

EBARA Pumps Europe reserves the right to make changes without prior notice

SECTIONAL TABLE
EVMS(L)20

N°	PART NAME		MATERIAL EVMS	MATERIAL EVMSL	DIMENSIONS	STANDARD
4	Casing cover		EN 1.4301 (AISI 304)	EN 1.4401 (AISI 316)		
5-1	Suction casing		EN 1.4301 (AISI 304)	EN 1.4401 (AISI 316)		
5-2	Intermediate Casing		EN 1.4301 (AISI 304)	EN 1.4401 (AISI 316)		
5-3	Intermediate casing bearing		EN 1.4301 (AISI 304)	EN 1.4401 (AISI 316)		
5-4	Discharge casing		EN 1.4301 (AISI 304)	EN 1.4401 (AISI 316)		
6	Bottom casing		EN 1.4308 (AISI 304)	EN 1.4408 (AISI 316)		
7	Outer casing		EN 1.4301 (AISI 304)	EN 1.4404 (AISI 316L)		
21	Impeller		EN 1.4301 (AISI 304)	EN 1.4401 (AISI 316)		
31	Shaft		EN 1.4301 (AISI 304) - EN 1.4462 (AISI 329A)	EN 1.4404 (AISI 316L) - EN 1.4462 (AISI 329A)		
32-1	Adjuster Key		EN 1.4301 (AISI 304)			
43-2	Shaft sleeve (intermediate)		EN 1.4301 (AISI 304)	EN 1.4404 (AISI 316L)		
43-3	Shaft sleeve (bearing)		EN 1.4301 (AISI 304)	EN 1.4401 (AISI 316)		
43-4	Shaft sleeve (adjustment)		EN 1.4301 (AISI 304)	EN 1.4401 (AISI 316)		
43-6	Washer		EN 1.4404 (AISI 316L)		D. 26x1.2	
44-1	Shaft sleeve bearing		Tungsten carbide			
45	Flange holder		EN 1.4301 (AISI 304)			
46	Ring (mechanical seal)		EN 1.4301 (AISI 304)	EN 1.4401 (AISI 316)		
47	Ring Holder		EN 1.4301 (AISI 304)	EN 1.4401 (AISI 316)		
48	Impeller nut		A2-70 UNI 7323 with inox insert	A4-70 UNI 7323 with inox insert	M10	
52-1	Bearing		Tungsten carbide			
75	O-Ring (plug)		EPDM		D. 12.37x2.62	OR 3050
75-1	O-Ring (plug)		EPDM			
107	Liner ring		EN 1.4301 (AISI 304) + PPS	EN 1.4401 (AISI 316) + PPS		
111	Mechanical Seal		SiC/Carbon/EPDM			
111-3	Mechanical seal seat		EN 1.4301 (AISI 304)	EN 1.4401 (AISI 316)		
111-4	Seal holder		EN 1.4301 (AISI 304)			
111-5	Mechanical seal cartridge		EN 1.4301 (AISI 304)	EN 1.4401 (AISI 316)		
115-1	O-Ring (outer casing)		EPDM		D. 164.46x5.34	OR 6645
115-3	O-Ring		EPDM			
115-4	O-Ring (cartridge sleeve)		EPDM		D. 15.88x2.62	OR 121
115-5	O-Ring (seal cover)		EPDM		D. 37.77x2.62	OR 3150
120-1	Tie-rod		Galvanized steel 6.8 strenght class ISO 898/1		M12	
120-3	Screw		A2-70 UNI 7323		M5x12	ISO 4762
120-6	Screw for coupling	up to 4.0 kW	Galvanized steel		M6x25	ISO 4762
		from 5.5 kW to 7.5 kW			M8x20	ISO 4762
		above 11 kW			M10x30	ISO 4762
120-11	Screw for counterflange		A2-70 UNI 7323			
120-13	Screw for motor	MEC 90-100-112			M8x20	ISO 4017
		MEC 132			M12x40	ISO 4017
		MEC 160			M16x50	ISO 4017
128-1	Nut for tie rod		Galvanized steel		M12	UNI 5588
128-3	Nut (motor)	MEC 132	Galvanized steel		M12	ISO 4032
		MEC 160			M16	UNI 5588
128-5	Nut for tie rod		Galvanized steel		M12	UNI 7474
130-1	Set screw		A2-70 UNI 7323		M5x8	UNI 5923
130-2	Screw for coupling guard		A2-70 UNI 7323		M5x6	UNI 7687
131-1	Pin for shaft		Carbon Steel		D. 5x35	UNI 4838
135-1	Washer		Galvanized steel		D. 13x24x2.5	UNI 6592
137-1	Impeller spacer		EN 1.4301 (AISI 304)	EN 1.4401 (AISI 316)		
140	Coupling	up to 4.0 kW	Die cast Aluminium EN AB-AISI11Cu2 (Fe)			
		above 5.5 kW	Cast Iron			
160	Base		Die cast Aluminium EN AB-AISI11Cu2 (Fe)			
162	Motor bracket		Cast iron EN-GJL-200-EN 1561			
212	Plug		EN 1.4301 (AISI 304)	EN 1.4401 (AISI 316)	G 3/8	
212-1	Plug		EN 1.4301 (AISI 304)	EN 1.4401 (AISI 316)	G 3/8	
212-2	Venting plug		EN 1.4404 (AISI 316L)			
219	Counter flange		EN 1.4301 (AISI 304)	EN 1.4401 (AISI 316)		
245	Coupling guard		EN 1.4301 (AISI 304)			
273-1	Plug Washer		EN 1.4301 (AISI 304)	EN 1.4401 (AISI 316)		
615	Flange		Carbon steel			

EBARA Pumps Europe reserves the right to make changes without prior notice

QUANTITY FOR MODEL EVMS(L)20

Pump Type	N°																												
	4	5-1	5-2	5-3	5-4	6	7	21	31***	32-1	43-2	43-3	43-4	43-6	44-1	45**	46	47	48	52-1	75	75-1	107	111	111-3	111-4	111-5	115-1	115-3*	115-4	115-5
EVMS(L)20 1/2.2	1	1	/	1	1	1	1	1	1	1	/	1	1	1	1	4	2	1	1	1	1	2	1	1	1	1	1	2	2	1	1
EVMS(L)20 2/4.0	1	1	/	1	1	1	1	2	1	1	/	1	1	/	1	4	2	1	1	1	1	2	2	1	1	1	1	2	2	1	1
EVMS(L)20 3/7.5	1	1	1	1	1	1	1	3	1	1	3	1	1	/	1	4	2	1	1	1	1	2	3	1	1	1	1	2	2	1	1
EVMS(L)20 4/7.5	1	1	2	1	1	1	1	4	1	1	5	1	1	/	1	4	2	1	1	1	1	2	4	1	1	1	1	2	2	1	1
EVMS(L)20 5/11	1	1	2	2	1	1	1	5	1	1	5	2	2	/	2	4	2	1	1	2	1	2	5	1	1	1	1	2	2	1	1
EVMS(L)20 6/11	1	1	3	2	1	1	1	6	1	1	7	2	2	/	2	4	2	1	1	2	1	2	6	1	1	1	1	2	2	1	1
EVMS(L)20 7/15	1	1	4	2	1	1	1	7	1	1	9	2	2	/	2	4	2	1	1	2	1	2	7	1	1	1	1	2	/	1	1
EVMS(L)20 8/15	1	1	5	2	1	1	1	8	1	1	11	2	2	/	2	4	2	1	1	2	1	2	8	1	1	1	1	2	/	1	1
EVMS(L)20 9/18.5	1	1	6	2	1	1	1	9	1	1	13	2	2	/	2	4	2	1	1	2	1	2	9	1	1	1	1	2	/	1	1
EVMS(L)20 10/18.5	1	1	7	2	1	1	1	10	1	1	15	2	2	/	2	4	2	1	1	2	1	2	10	1	1	1	1	2	/	1	1

Pump Type	N°																												
	120-1	120-3	120-6	120-11*	120-13	128-1	128-3	128-5	128-6	130-1	130-2	131-1	135-1	135-6	137-1	140	160	162	212	212-1	212-2	219*	245	273-1	615**
EVMS(L)20 1/2.2	4	4	4	4	4	4	/	4	4	3	4	1	4	4	1	2	1	1	1	2	1	2	2	2	2
EVMS(L)20 2/4.0	4	4	4	4	4	4	/	4	4	3	4	1	4	4	1	2	1	1	1	2	1	2	2	2	2
EVMS(L)20 3/7.5	4	4	4	4	4	4	4	4	/	3	4	1	4	/	1	2	1	1	1	2	1	2	2	2	2
EVMS(L)20 4/7.5	4	4	4	4	4	4	4	4	/	3	4	1	4	/	1	2	1	1	1	2	1	2	2	2	2
EVMS(L)20 5/11	4	4	4	4	4	4	4	4	/	3	4	1	4	/	1	2	1	1	1	2	1	2	2	2	2
EVMS(L)20 6/11	4	4	4	4	4	4	4	4	/	3	4	1	4	/	1	2	1	1	1	2	1	2	2	2	2
EVMS(L)20 7/15	4	4	4	/	4	4	4	4	/	3	4	1	4	/	1	2	1	1	1	2	1	/	2	2	2
EVMS(L)20 8/15	4	4	4	/	4	4	4	4	/	3	4	1	4	/	1	2	1	1	1	2	1	/	2	2	2
EVMS(L)20 9/18.5	4	4	4	/	4	4	4	4	/	3	4	1	4	/	1	2	1	1	1	2	1	/	2	2	2
EVMS(L)20 10/18.5	4	4	4	/	4	4	4	4	/	3	4	1	4	/	1	2	1	1	1	2	1	/	2	2	2

* only for Oval flange (N)
** only for Loose round flange (LF)
*** □ shaft in EN 1.4462 (AISI 329A)
128-6 / 135-6: with Aluminium coupling (see drawing pag.211)

EBARA
EBARA Pumps Europe
EBARA Pumps Europe reserves the right to make changes without prior notice

VERTICAL MULTISTAGE PUMPS EVMS

PERFORMANCE CURVE
EVMSG20

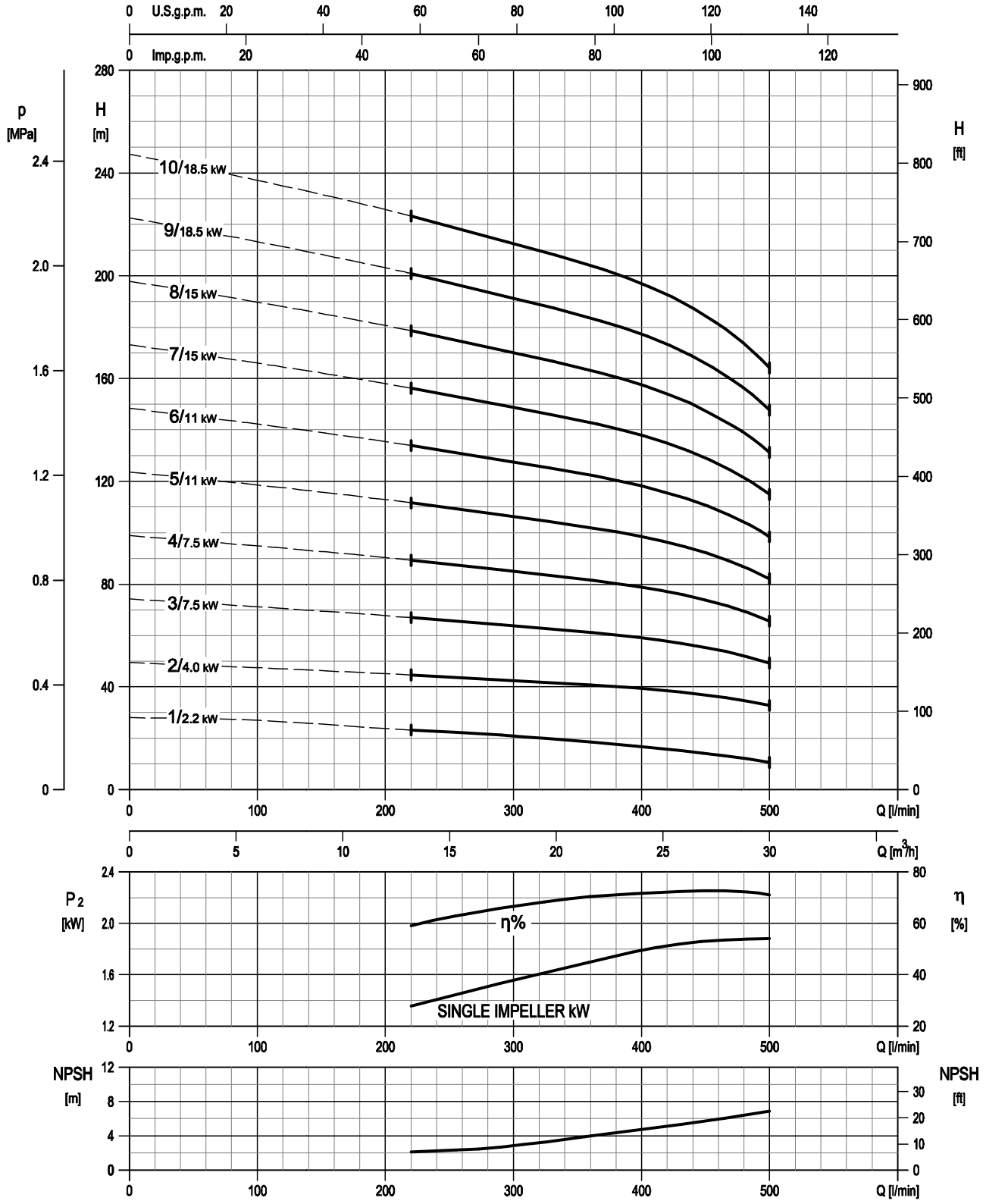

Rotation speed ≈3500 min-1
Test standard: ISO 9906:2012 - Grade 3B

EBARA Pumps Europe reserves the right to make changes without prior notice

TECHNICAL DATA
EVMSG20

Dimensional sketch

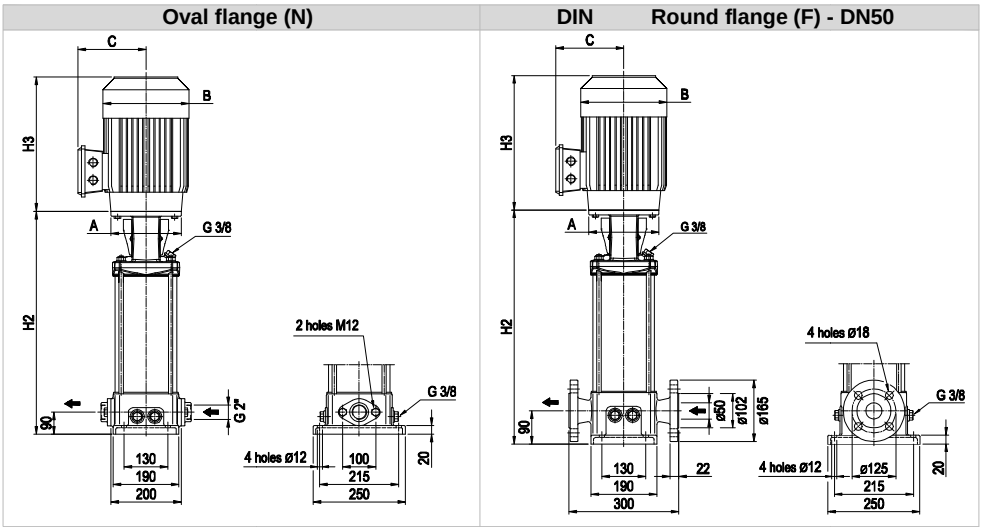

Dimensions [mm] and Weights [Kg]

Pump Type	Pmax [MPa]	Motor kW	Size	A	3 ~ B	C	H3	Oval flange (N) H2	Weight Pump	Weight Pump +	Round flange (F) H2	Weight Pump	Weight Pump + Motor
EVMSG20 1/2.2	1.6	2.2	90 L	ø140	180	148	267	387	21.2	37.2	387	26.9	42.9
EVMSG20 2/4.0	1.6	4.0	112 M	ø160	196	155	306	397	21.6	48.1	397	27.3	53.8
EVMSG20 3/7.5	1.6	7.5	132 S	ø300	225	160	350	534	29.9	70.3	534	35.6	76
EVMSG20 4/7.5	1.6	7.5	132 S	ø300	225	160	350	574	31.1	71.5	574	36.8	77.2
EVMSG20 5/11	1.6	11	160 M	ø350	248	194	476	644	40.5	103	644	46.2	108.7
EVMSG20 6/11	1.6	11	160 M	ø350	248	194	476	684	40.7	103.2	684	46.4	108.9
EVMSG20 7/15	2.5	15	160 M	ø350	317	238	498	-	-	-	724	49.4	138.3
EVMSG20 8/15	2.5	15	160 M	ø350	317	238	498	-	-	-	764	50.7	139.6
EVMSG20 9/18.5	2.5	18.5	160 L	ø350	317	238	542	-	-	-	804	52	156
EVMSG20 10/18.5	2.5	18.5	160 L	ø350	317	238	542	-	-	-	844	53.4	157.4

1.6 MPa=16 bar ; 2.5 MPa=25 bar
- not available model

EBARA Pumps Europe reserves the right to make changes without prior notice

SECTIONAL VIEW
EVMSG20

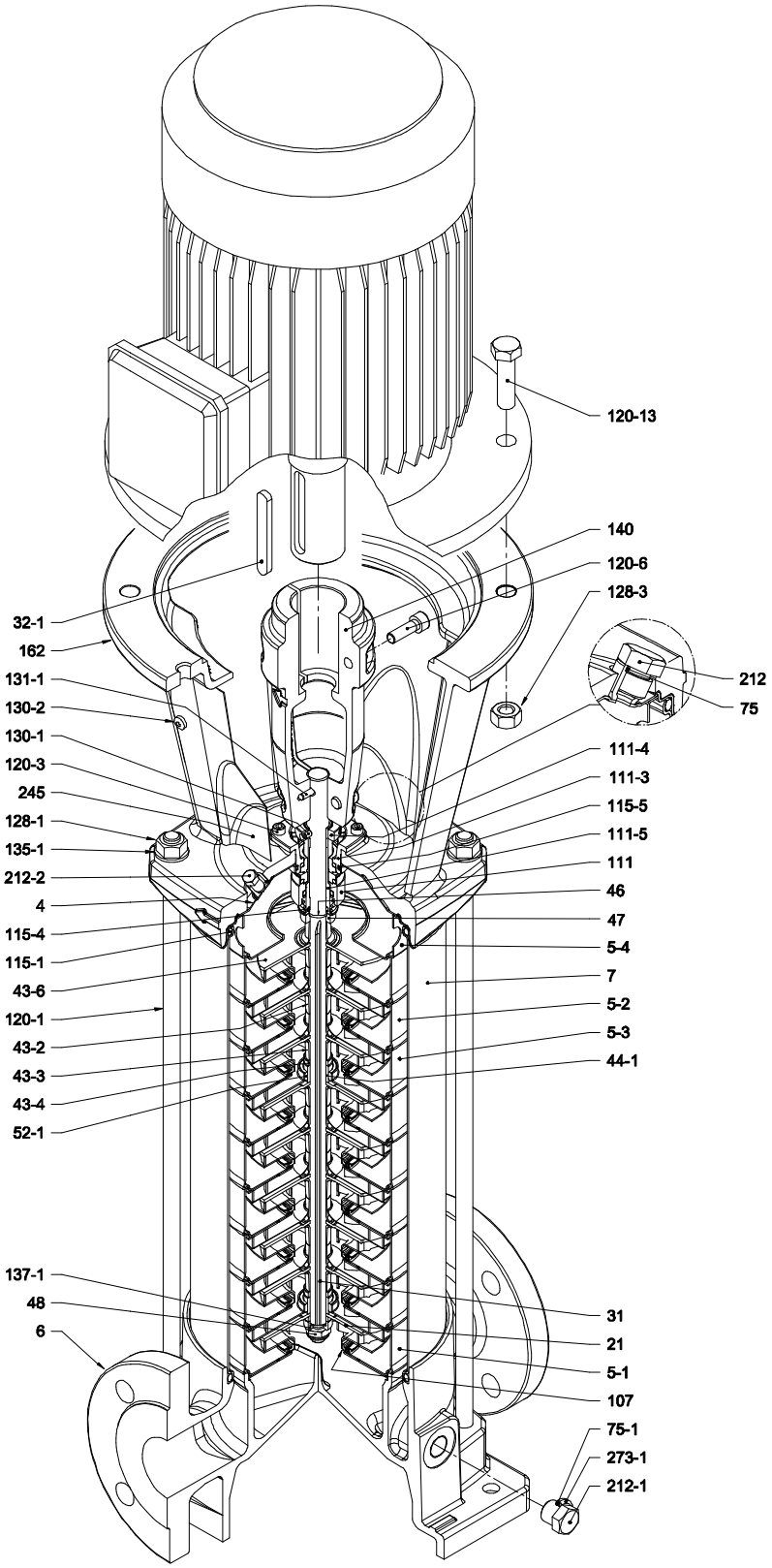

with Round flange (F)

EBARA Pumps Europe

EBARA Pumps Europe reserves the right to make changes without prior notice

PIPE CONNECTION
EVMSG20

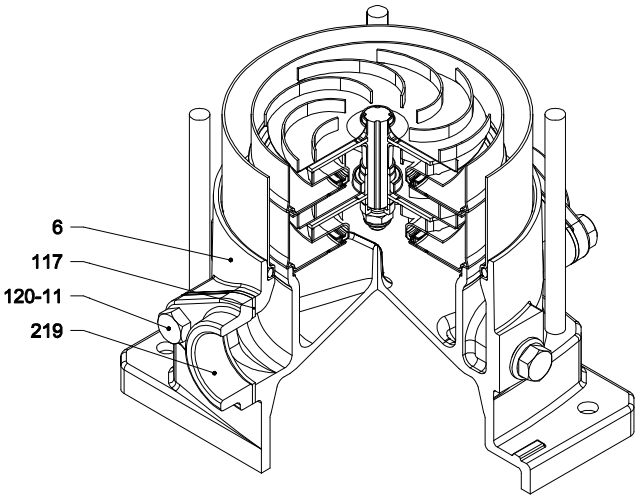

with Oval flange (N)

EBARA Pumps Europe reserves the right to make changes without prior notice

SECTIONAL TABLE
EVMSG20

N°	PART NAME		MATERIAL EVMSG	DIMENSIONS	STANDARD
4	Casing cover		EN 1.4301 (AISI 304)		
5-1	Suction casing		EN 1.4301 (AISI 304)		
5-2	Intermediate Casing		EN 1.4301 (AISI 304)		
5-3	Intermediate casing bearing		EN 1.4301 (AISI 304)		
5-4	Discharge casing		EN 1.4301 (AISI 304)		
6	Bottom casing		Cast Iron EN GJL-250-EN1561		
7	Outer casing		EN 1.4301 (AISI 304)		
21	Impeller		EN 1.4301 (AISI 304)		
31	Shaft		EN 1.4301 (AISI 304) - EN 1.4462 (AISI 329A)		
32-1	Adjuster Key		EN 1.4301 (AISI 304)		
43-2	Shaft sleeve (intermediate)		EN 1.4301 (AISI 304)		
43-3	Shaft sleeve (bearing)		EN 1.4301 (AISI 304)		
43-4	Shaft sleeve (adjustment)		EN 1.4301 (AISI 304)		
43-6	Washer		EN 1.4404 (AISI 316L)	D. 26x1.2	
44-1	Shaft sleeve bearing		Tungsten carbide		
46	Ring (mechanical seal)		EN 1.4301 (AISI 304)		
47	Ring Holder		EN 1.4301 (AISI 304)		
48	Impeller nut		A2-70 UNI 7323 with inox insert	M10	
52-1	Bearing		Tungsten carbide		
75	O-Ring (plug)		EPDM	D. 12.37x2.62	OR 3050
75-1	O-Ring (plug)		EPDM		
107	Liner ring		EN 1.4301 (AISI 304) + PPS		
111	Mechanical Seal		SiC/Carbon/EPDM		
111-3	Mechanical seal seat		EN 1.4301 (AISI 304)		
111-4	Seal holder		EN 1.4301 (AISI 304)		
111-5	Mechanical seal cartridge		EN 1.4301 (AISI 304)		
115-1	O-Ring (outer casing)		EPDM	D. 164.46x5.34	OR 6645
115-4	O-Ring (cartridge sleeve)		EPDM	D. 15.88x2.62	OR 121
115-5	O-Ring (seal cover)		EPDM	D. 37.77x2.62	OR 3150
117	Flange gasket		EPDM		
120-1	Tie-rod		Galvanized steel 6.8 strenght class ISO 898/1	M12	
120-3	Screw		A2-70 UNI 7323	M5x12	ISO 4762
120-6	Screw for coupling	up to 4.0 kW	Galvanized steel 6.8 strenght class ISO 898/1	M6x25	ISO 4762
		from 5.5 kW to 7.5 kW		M8x20	ISO 4762
		above 11 kW		M10x30	ISO 4762
120-11	Screw for counterflange		A2-70 UNI 7323		
120-13	Screw for motor	MEC 90-100-112		M8x20	ISO 4017
		MEC 132		M12x40	ISO 4017
		MEC 160		M16x50	ISO 4017
128-1	Nut for tie rod		Galvanized steel	M12	UNI 5588
128-3	Nut (motor)	MEC 132	Galvanized steel	M12	ISO 4032
		MEC 160		M16	UNI 5588
130-1	Set screw		A2-70 UNI 7323	M5x8	UNI 5923
130-2	Screw for coupling guard		A2-70 UNI 7323	M5x6	UNI 7687
131-1	Pin for shaft		Carbon Steel	D. 5x35	UNI 4838
135-1	Washer		Galvanized steel	D. 13x24x2.5	UNI 6592
137-1	Impeller spacer		EN 1.4301 (AISI 304)		
140	Coupling	up to 4.0 kW	Die cast Aluminium EN AB-AISI11Cu2 (Fe)		
		above 5.5 kW	Cast Iron		
162	Motor bracket		Cast iron EN-GJL-200-EN 1561		
212	Plug		EN 1.4301 (AISI 304)	G 3/8	
212-1	Plug		EN 1.4301 (AISI 304)	G 3/8	
212-2	Venting plug		EN 1.4404 (AISI 316L)		
219	Counter flange		Galvanized steel		
245	Coupling guard		EN 1.4301 (AISI 304)		
273-1	Plug Washer		EN 1.4301 (AISI 304)		

EBARA Pumps Europe reserves the right to make changes without prior notice

QUANTITY FOR MODEL EVMSG20

Pump Type	N°																											
	4	5-1	5-2	5-3	5-4	6	7	21	31***	32-1	43-2	43-3	43-4	43-6	44-1	46	47	48	52-1	75	75-1	107	111	111-3	111-4	111-5	115-1	115-4	115-5
EVMSG20 1/2.2	1	1	/	1	1	1	1	1	1	1	/	1	1	1	1	2	1	1	1	1	4	1	1	1	1	1	2	1	1
EVMSG20 2/4.0	1	1	/	1	1	1	1	2	1	1	/	1	1	/	1	2	1	1	1	1	4	2	1	1	1	1	2	1	1
EVMSG20 3/7.5	1	1	1	1	1	1	1	3	1	1	3	1	1	/	1	2	1	1	1	1	4	3	1	1	1	1	2	1	1
EVMSG20 4/7.5	1	1	2	1	1	1	1	4	1	1	5	1	1	/	1	2	1	1	1	1	4	4	1	1	1	1	2	1	1
EVMSG20 5/11	1	1	2	2	1	1	1	5	1	1	5	2	2	/	2	2	1	1	2	1	4	5	1	1	1	1	2	1	1
EVMSG20 6/11	1	1	3	2	1	1	1	6	1	1	7	2	2	/	2	2	1	1	2	1	4	6	1	1	1	1	2	1	1
EVMSG20 7/15	1	1	4	2	1	1	1	7	1	1	9	2	2	/	2	2	1	1	2	1	4	7	1	1	1	1	2	1	1
EVMSG20 8/15	1	1	5	2	1	1	1	8	1	1	11	2	2	/	2	2	1	1	2	1	4	8	1	1	1	1	2	1	1
EVMSG20 9/18.5	1	1	6	2	1	1	1	9	1	1	13	2	2	/	2	2	1	1	2	1	4	9	1	1	1	1	2	1	1
EVMSG20 10/18.5	1	1	7	2	1	1	1	10	1	1	15	2	2	/	2	2	1	1	2	1	4	10	1	1	1	1	2	1	1

Pump Type	N°																							
	117*	120-1	120-3	120-6	120-11*	120-13	128-1	128-3	128-6	130-1	130-2	131-1	135-1	135-6	137-1	140	162	212	212-1	212-2	219*	245	273-1
EVMSG20 1/2.2	2	4	4	4	4	4	4	/	4	3	4	1	4	4	1	2	1	1	4	1	2	2	4
EVMSG20 2/4.0	2	4	4	4	4	4	4	/	4	3	4	1	4	4	1	2	1	1	4	1	2	2	4
EVMSG20 3/7.5	2	4	4	4	4	4	4	4	/	3	4	1	4	/	1	2	1	1	4	1	2	2	4
EVMSG20 4/7.5	2	4	4	4	4	4	4	4	/	3	4	1	4	/	1	2	1	1	4	1	2	2	4
EVMSG20 5/11	2	4	4	4	4	4	4	4	/	3	4	1	4	/	1	2	1	1	4	1	2	2	4
EVMSG20 6/11	2	4	4	4	4	4	4	4	/	3	4	1	4	/	1	2	1	1	4	1	2	2	4
EVMSG20 7/15	/	4	4	4	/	4	4	4	/	3	4	1	4	/	1	2	1	1	4	1	/	2	4
EVMSG20 8/15	/	4	4	4	/	4	4	4	/	3	4	1	4	/	1	2	1	1	4	1	/	2	4
EVMSG20 9/18.5	/	4	4	4	/	4	4	4	/	3	4	1	4	/	1	2	1	1	4	1	/	2	4
EVMSG20 10/18.5	/	4	4	4	/	4	4	4	/	3	4	1	4	/	1	2	1	1	4	1	/	2	4

* only for Oval flange (N)
*** ▭ shaft in EN 1.4462 (AISI 329A)
128-6 / 135-6: with Aluminium coupling (see drawing pag.211)

EBARA Pumps Europe reserves the right to make changes without prior notice

PACKING DRAWING
EVMS(.)1-3-5-10-15-20

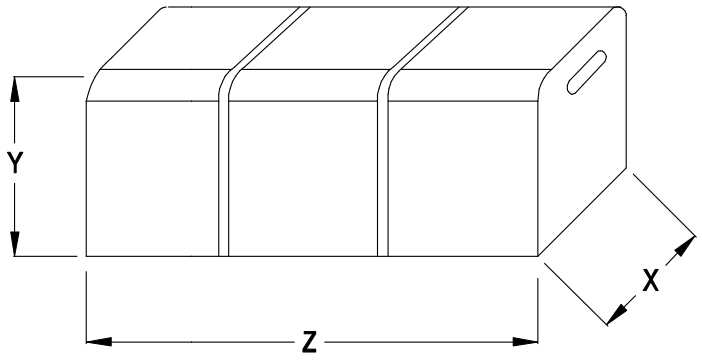

TYPE 1

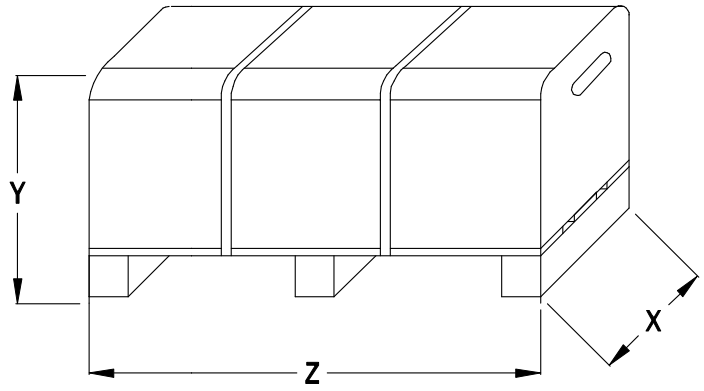

TYPE 2

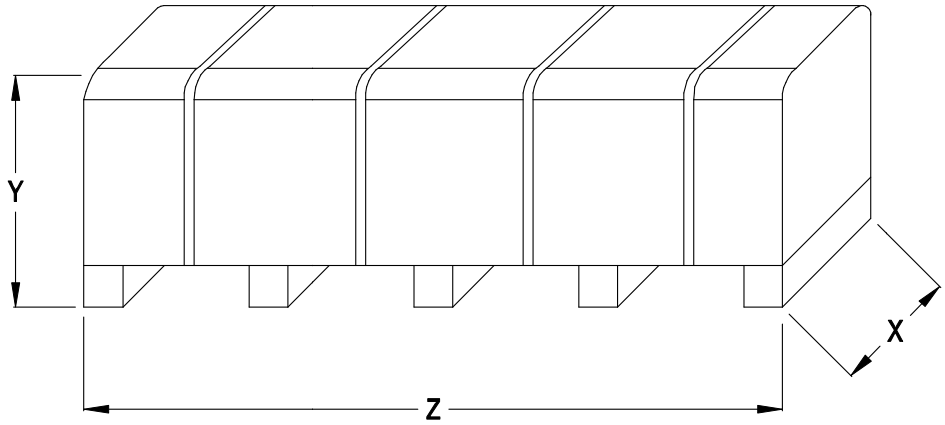

TYPE 3

EBARA Pumps Europe reserves the right to make changes without prior notice

PACKING DATA
EVMS(.)1-3-5

	Pump type	Pumps						Pumps with motor ~3					
		Packing [mm]			Weight + Packing [kgf]		Pack Type	Packing [mm]			Weight + Packing [kgf]		Pack Type
		X	Y	Z	EVMS(L)	EVMSG		X	Y	Z	EVMS(L)	EVMSG	
1	EVMS(.)1 2/0.37	385	400	385	12.6	19.6	1	385	400	585	19.2	26.2	1
	EVMS(.)1 3/0.37	385	400	385	13.1	20.0	1	385	400	585	19.7	26.6	1
	EVMS(.)1 4/0.37	385	400	385	13.5	20.5	1	385	400	770	20.4	27.4	1
	EVMS(.)1 5/0.37	385	400	585	14.5	21.4	1	385	400	770	20.9	27.8	1
	EVMS(.)1 6/0.55	385	400	585	14.9	21.8	1	385	400	770	21.7	28.7	1
	EVMS(.)1 7/0.55	385	400	585	15.6	22.5	1	385	400	770	22.4	29.4	1
	EVMS(.)1 8/0.75	385	400	585	16.0	22.9	1	385	400	770	26.1	33.1	1
	EVMS(.)1 9/0.75	385	400	585	16.4	23.4	1	385	400	770	26.6	33.5	1
	EVMS(.)1 10/0.75	385	400	585	16.9	23.8	1	385	400	770	27.0	33.9	1
	EVMS(.)1 11/1.1	385	400	585	17.3	24.3	1	385	400	970	29.7	36.7	1
	EVMS(.)1 12/1.1	385	400	585	17.7	24.7	1	385	400	970	30.1	37.1	1
	EVMS(.)1 13/1.1	385	400	585	18.4	25.4	1	385	400	970	30.8	37.8	1
	EVMS(.)1 14/1.1	385	400	770	19.3	26.3	1	385	400	970	31.2	38.2	1
	EVMS(.)1 16/1.5	385	400	770	20.3	27.3	1	385	400	970	33.8	40.8	1
	EVMS(.)1 18/1.5	385	400	770	21.2	28.2	1	385	400	970	34.7	41.7	1
	EVMS(.)1 20/1.5	385	400	770	22.1	29.1	1	385	400	1170	36.2	43.1	1
	EVMS(.)1 22/2.2	385	400	970	24.0	30.9	1	385	400	1170	40.9	47.9	1
	EVMS(.)1 24/2.2	385	400	970	24.9	31.9	1	385	400	1170	41.9	48.8	1
	EVMS(.)1 26/2.2	385	400	970	25.8	32.8	1	385	400	1170	42.8	49.7	1
	EVMS(.)1 27/2.2	385	400	970	26.3	33.3	1	385	400	1170	43.3	50.2	1
	EVMS(.)1 29/2.2	385	400	970	27.2	34.2	1	500	525	1350	64.1	71.0	3
3	EVMS(.)3 2/0.37	385	400	385	12.5	17.6	1	385	400	585	19.1	24.2	1
	EVMS(.)3 3/0.55	385	400	385	12.9	18.0	1	385	400	585	19.9	25.0	1
	EVMS(.)3 4/0.75	385	400	385	13.6	18.7	1	385	400	770	25.3	30.4	1
	EVMS(.)3 5/0.75	385	400	585	14.5	19.6	1	385	400	770	25.7	30.8	1
	EVMS(.)3 6/1.1	385	400	585	14.9	20.0	1	385	400	770	26.6	31.8	1
	EVMS(.)3 7/1.1	385	400	585	15.3	20.4	1	385	400	770	27.1	32.2	1
	EVMS(.)3 8/1.5	385	400	585	15.8	20.9	1	385	400	770	29.1	34.2	1
	EVMS(.)3 9/1.5	385	400	585	16.2	21.3	1	385	400	970	30.2	35.3	1
	EVMS(.)3 10/1.5	385	400	585	16.6	21.7	1	385	400	970	30.6	35.7	1
	EVMS(.)3 11/2.2	385	400	585	17.0	22.1	1	385	400	970	34.3	39.4	1
	EVMS(.)3 12/2.2	385	400	585	17.4	22.5	1	385	400	970	34.7	39.8	1
	EVMS(.)3 13/2.2	385	400	770	18.6	23.7	1	385	400	970	35.4	40.5	1
	EVMS(.)3 14/2.2	385	400	770	19.0	24.1	1	385	400	970	35.8	41.0	1
	EVMS(.)3 15/3.0	385	400	770	19.5	24.6	1	385	400	970	43.2	48.3	1
	EVMS(.)3 16/3.0	385	400	770	20.5	25.6	1	385	400	970	44.1	49.2	1
	EVMS(.)3 17/3.0	385	400	770	21.0	26.1	1	385	400	1170	45.1	50.0	1
	EVMS(.)3 19/3.0	385	400	770	21.9	27.0	1	400	510	1200	46.0	60.1	1 | 2
	EVMS(.)3 20/3.0	385	400	770	22.3	27.4	1	400	510	1200	46.5	60.6	1 | 2
	EVMS(.)3 21/4.0	385	400	770	22.8	27.9	1	400	510	1200	63.3	68.4	2
	EVMS(.)3 22/4.0	385	400	970	23.6	28.8	1	400	510	1200	63.8	68.9	2
	EVMS(.)3 23/4.0	385	400	970	24.1	29.2	1	400	510	1200	64.2	69.3	2
5	EVMS(.)5 2/0.75	385	400	385	12.7	17.8	1	385	400	770	24.4	29.6	1
	EVMS(.)5 3/1.1	385	400	585	13.7	18.8	1	385	400	770	25.4	30.5	1
	EVMS(.)5 4/1.5	385	400	585	14.4	19.5	1	385	400	770	27.8	32.9	1
	EVMS(.)5 5/2.2	385	400	585	14.9	20.0	1	385	400	770	31.5	36.6	1
	EVMS(.)5 6/2.2	385	400	585	15.4	20.5	1	385	400	770	32.0	37.1	1
	EVMS(.)5 7/3.0	385	400	585	16.1	21.2	1	385	400	970	40.2	45.3	1
	EVMS(.)5 8/3.0	385	400	585	16.4	21.5	1	385	400	970	40.5	45.6	1
	EVMS(.)5 9/3.0	385	400	585	16.9	22.0	1	385	400	970	41.0	46.1	1
	EVMS(.)5 10/4.0	385	400	770	17.9	23.0	1	385	400	970	48.9	52.9	1
	EVMS(.)5 11/4.0	385	400	770	18.6	23.7	1	385	400	970	49.6	53.3	1
	EVMS(.)5 12/4.0	385	400	770	19.7	24.8	1	385	400	970	50.7	53.6	1
	EVMS(.)5 13/5.5	385	400	970	27.2	32.3	1	400	510	1200	75.8	80.9	2
	EVMS(.)5 14/5.5	385	400	970	27.7	32.8	1	400	510	1200	76.3	81.4	2
	EVMS(.)5 15/5.5	385	400	970	28.3	33.4	1	400	510	1200	76.8	81.9	2
	EVMS(.)5 16/5.5	385	400	970	28.8	33.9	1	500	525	1350	88.2	93.3	3
	EVMS(.)5 17/7.5	385	400	970	29.4	34.5	1	500	525	1350	90.7	95.8	3
	EVMS(.)5 19/7.5	385	400	970	30.4	35.5	1	500	525	1350	91.6	96.7	3

EBARA Pumps Europe reserves the right to make changes without prior notice

PACKING DATA
EVMS(.)10-15-20

	Pump type	Pumps						Pumps with motor ~3					
		Packing [mm]			Weight + Packing [kgf]		Pack Type	Packing [mm]			Weight + Packing [kgf]		Pack Type
		X	Y	Z	EVMS(L)	EVMSG		X	Y	Z	EVMS(L)	EVMSG	
10	EVMS(.)10 1/0.75	385	400	585	23.1	26.6	1	385	400	770	34.4	37.8	1
	EVMS(.)10 2/1.5	385	400	585	23.3	26.7	1	385	400	970	37.3	40.7	1
	EVMS(.)10 3/2.2	385	400	585	24.2	27.6	1	385	400	970	41.5	44.9	1
	EVMS(.)10 4/3.0	385	400	585	25.1	28.6	1	400	510	1200	58.7	62.2	2
	EVMS(.)10 5/4.0	385	400	585	26.0	29.4	1	400	510	1200	67.0	70.5	2
	EVMS(.)10 6/4.0	385	400	585	26.8	30.2	1	400	510	1200	67.8	71.3	2
	EVMS(.)10 7/5.5	385	400	770	35.2	38.6	1	400	510	1200	75.1	78.6	2
	EVMS(.)10 8/5.5	385	400	770	36.4	39.8	1	400	510	1200	76.3	79.8	2
	EVMS(.)10 9/5.5	385	400	770	37.2	40.6	1	400	510	1200	77.2	80.6	2
	EVMS(.)10 10/7.5	385	400	770	38.0	41.5	1	400	510	1200	79.8	83.2	2
	EVMS(.)10 11/7.5	385	400	970	40.1	43.5	1	400	510	1200	81.4	84.9	2
	EVMS(.)10 12/7.5	385	400	970	41.0	44.5	1	500	525	1350	93.3	96.7	3
	EVMS(.)10 14/11	385	400	970	46.3	49.8	1	500	525	1540	136.9	140.4	3
	EVMS(.)10 15/11	385	400	970	47.8	50.8	1	500	525	1540	137.3	140.7	3
	EVMS(.)10 16/11	400	510	1200	62.4	65.8	2	500	525	1540	138.9	142.4	3
15	EVMS(.)15 1/1.5	385	400	585	21.2	29.3	1	385	400	770	34.5	42.7	1
	EVMS(.)15 2/3.0	385	400	585	21.6	29.7	1	385	400	770	44.0	49.6	1
	EVMS(.)15 3/5.5	385	400	770	30.3	38.4	1	400	510	1200	79.2	87.4	2
	EVMS(.)15 4/7.5	385	400	770	31.5	39.6	1	400	510	1200	82.2	90.4	2
	EVMS(.)15 5/7.5	385	400	770	32.6	40.7	1	400	510	1200	83.4	91.5	2
	EVMS(.)15 6/11	385	400	770	42.4	49.6	1	500	525	1350	126.2	134.3	3
	EVMS(.)15 7/11	400	510	1200	54.3	62.4	2	500	525	1350	128.1	136.2	3
	EVMS(.)15 8/15	400	510	1200	55.6	63.7	2	500	525	1350	157.6	165.7	3
	EVMS(.)15 9/15	400	510	1200	56.9	65.0	2	500	525	1540	160.9	169.0	3
	EVMS(.)15 10 /15	400	510	1200	58.1	66.3	2	500	525	1540	162.9	171.0	3
	EVMS(.)15 11/18.5	400	510	1200	59.4	67.6	2	500	525	1540	184.0	192.1	3
	EVMS(.)15 12/18.5	400	510	1200	60.7	68.9	2	500	525	1540	185.3	193.4	3
20	EVMS(.)20 1/2.2	385	400	585	21.2	29.3	1	385	400	770	37.8	45.9	1
	EVMS(.)20 2/4.0	385	400	585	21.6	29.7	1	385	400	770	48.3	53.7	1
	EVMS(.)20 3/7.5	385	400	770	30.3	38.5	1	400	510	1200	81.1	89.3	2
	EVMS(.)20 4/7.5	385	400	770	31.5	39.7	1	400	510	1200	82.8	91.0	2
	EVMS(.)20 5/11	385	400	770	40.9	49.1	1	500	525	1350	124.7	132.9	3
	EVMS(.)20 6/11	385	400	970	41.6	49.8	1	500	525	1350	124.9	133.1	3
	EVMS(.)20 7/15	385	400	1170	44.5	50.0	1	500	525	1350	156.1	164.2	3
	EVMS(.)20 8/15	400	510	1200	45.9	63.6	1 2	500	525	1540	172.2	181.4	3
	EVMS(.)20 9/18.5	400	510	1200	47.2	64.9	1 2	500	525	1540	182.3	190.4	3
	EVMS(.)20 10 /18.5	400	510	1200	48.5	66.2	1 2	500	525	1540	182.6	190.8	3

EBARA Pumps Europe reserves the right to make changes without prior notice

EVM

EBARA Pumps Europe reserves the right to make changes without prior notice

PRODUCT FEATURES

[General]

1. **Pump Type**
   The EVM is Non-self-priming, vertical multistage in line, centrifugal pumps.
2. **Model range**
   The EVM comes in **32,45 and 64 m3/h flow sizes** for the majority market needs.
3. **Maximum operating pressure**
   The EVM can be operated **at 16,25 or 30 bar as maximum.**
4. **Operating temperature range**
   The EVM can be operated **from - 15 to + 120 ℃** as the maximum.
5. **Material options**
   AISI 304, AISI 316 and Cast iron versions are available.
6. **Motor**
   The EVM can be coupled with **the commercial motors** that are acquired in the markets.

[Main Product Features]

1. **Robust constructions**
   • **Commercial motors** can be fitted to all of the pump models with additional ball bearing on the bracket.
   • **Stainless cast** bottom casing to ensure 30 bar working pressure.
   • **Rolling groove pump shaft** for high torque transmissions.
2. **Energy saving**
   • **High efficiency IE2 motor.**
   • **The VFD (Variable frequency drive)** can be fitted on the motor for the pressure boosting systems.
3. **Easy maintenance**
   The cartridge shaft seal enables **the plug in replacement** of the shaft seal without disassembling the motor bracket.

EBARA Pumps Europe reserves the right to make changes without prior notice

PRODUCT SPECIFICATIONS
EVM(.)32-45-64

PUMP												
Version			EVMG			EVM			EVML			
Operating range	Nominal flow rate (m^3/h)		32	45	64	32	45	64	32	45	64	
	Maximum working pressure		1.6 / 3.0 MPa (16 bar/ 30 bar)									
	Liquid temperature range		-15℃ to 120℃									
Key Components Material	Impeller		EN 1.4301 (AISI 304)						EN 1.4401 (AISI 316)			
	Intermediate casing		EN 1.4301 (AISI 304)						EN 1.4401 (AISI 316)			
	Liner ring	EVM 32	EN 1.4301 (AISI 304) + PTFE						EN 1.4401 (AISI 316) + PTFE			
		EVM 45-64	EN 1.4401 (AISI 316) + PTFE									
	Bottom casing		Cast Iron			ASTMCF8			ASTMCF8M			
	Casing cover		Cast Iron			Cast Iron + EN 1.4301 (AISI 304)			Cast Iron + EN 1.4401 (AISI 316)			
	Shaft	EN 1.4401 (AISI 316)	●	●	●	●	●	●	●	●	●	
	Shaft sleeve bearing		Tungstene carbide									
	Shaft Seal	type	Cartridge mechanical seal									
		material	Silicon Carbide/Carbon/FPM									
	O-ring		EPDM						FPM			
	Outer casing		EN 1.4301 (AISI 304)						EN 1.4404 (AISI 316L)			
	Motor Bracket		Cast Iron									
	Tie rod		Carbon Steel									
	Coupling		Carbon Steel									
	Base		Cast Iron									
Pipe connection	Round Flange (DIN)		●	●	●	●	●	●	●	●	●	

Legend: ● Standard

MOTOR		
Power Source	Frequency	60 Hz
	Phase	Three Phase
	Rotation speed	≈ 3500 min-1
	Power rating	4.0 ÷ 37 kW 5.5 ÷ 50 HP
	Voltage	220/380 ± 10% V (up to 4kW) 265/460 ± 10% V (up to 4kW) 380/660 ± 10% V (above 5.5 kW) 460 ± 10% V (above 5.5 kW)
Type	Type	Electric - TEFC
	Efficiency Level	IE2 to 4.0 kW (220-380V / 265-460V) IE2 above 5.5 kW (380-660V / 460V)
	No° of poles	2
	Protection degree	IP 55
	Insulation Class	F (temperature rise class B)
Others	Thermal Protection	PTC
	Casing Material	Aluminium
	Flange mount (IEC motor)	IM B14 (up to 4 kW) IM B5 (above 5.5 kW)

EBARA Pumps Europe reserves the right to make changes without prior notice

SHAFT SEAL
EVM(.)32-45-64

1. Shaft Seal

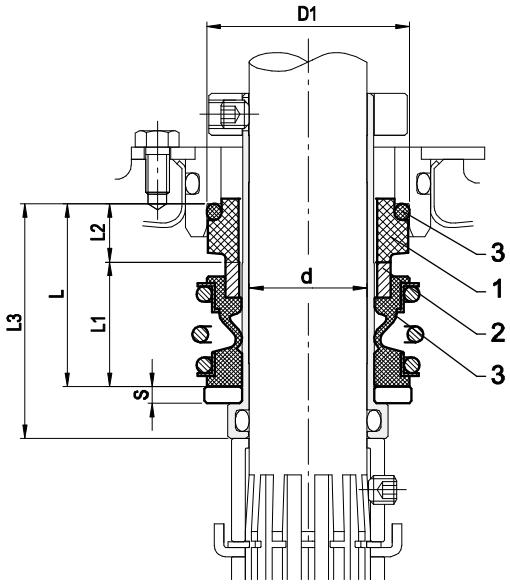

up to 25 bar
Cartridge Unbalanced type

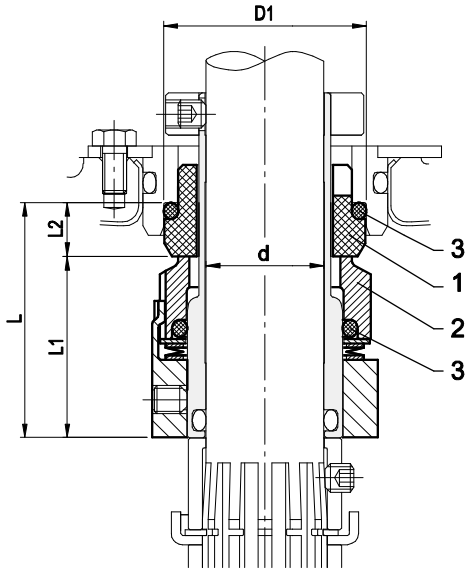

from 25 to 30 bar
Cartridge Balanced type

2. Type of Shaft Seal and Dimensions [mm]

Size	Max operating pressure	d	D_1	L	L_1	L_2	L_3	S	Material 1	2	3
[mm]	[bar]	[mm]	[mm]	[mm]	[mm]	[mm]	[mm]	[mm]	Stationary Seal Ring	Rotary Seal Ring	Rubber
25	25	25	43	39	26.5	12.5	50	3.5	Carbon graphite	Silicon carbide	FPM
	30			50	38.5	11.5	-	-			

EBARA Pumps Europe reserves the right to make changes without prior notice

TYPE KEY
EVM(.)32-45-64

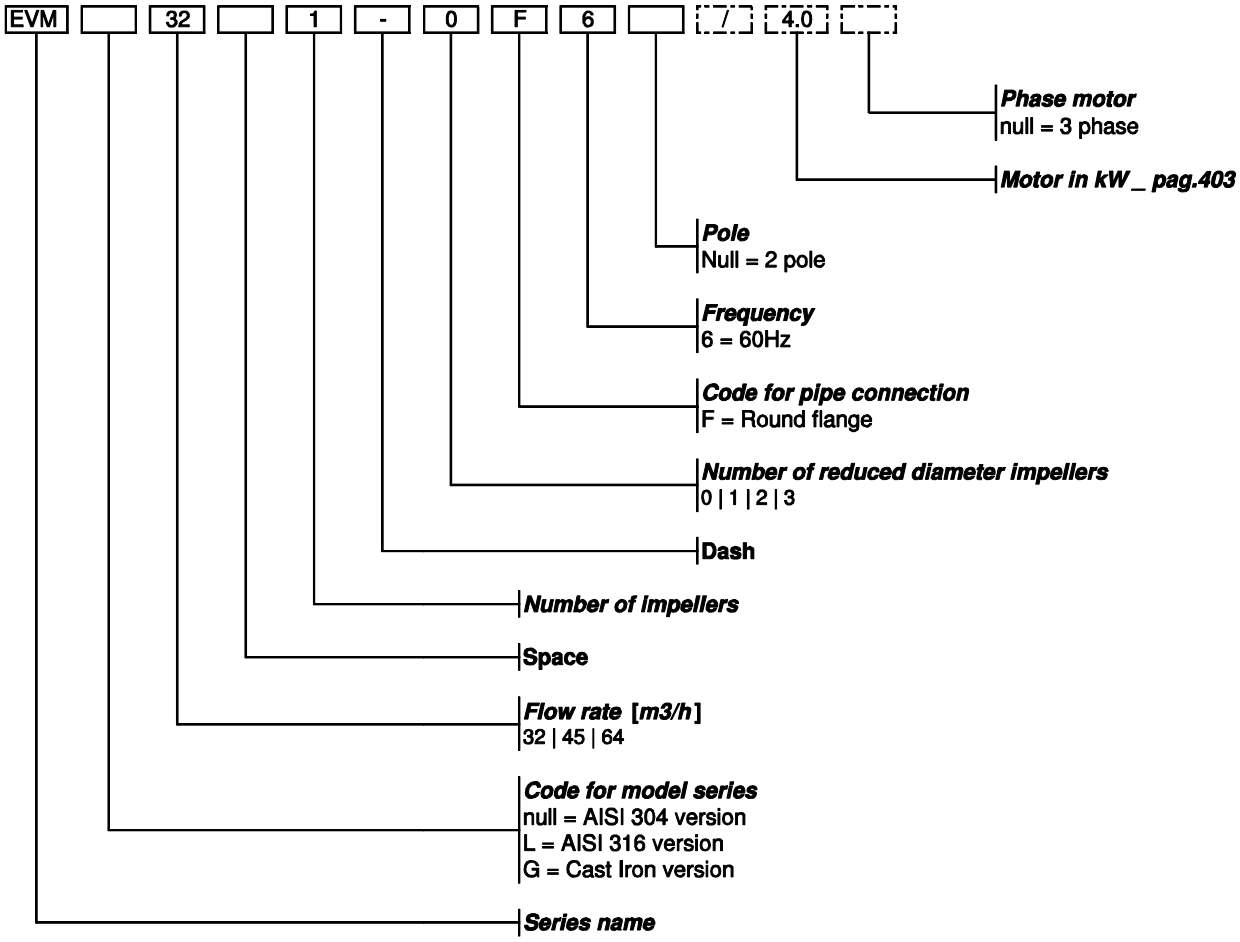

Example for **pump without motor**
EVM32 1-0F6

Example for **pump with motor**
EVM32 1-0F6/4.0

NAMEPLATE

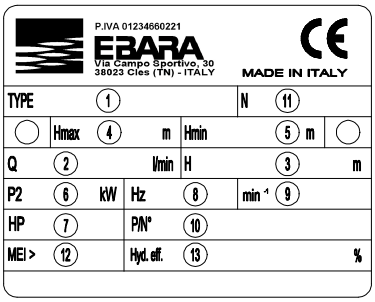

1)	"TYPE"	Pump model
2)	"Q"	Indicates upper and lower flow rate limits
3)	"H"	Indicates head limits corresponding to minimum and maximum flow rate
4)	"Hmax"	Maximum head
5)	"Hmin"	Minimum head
6)	"P2"	Rated power of the motor (output at shaft)
7)	"HP"	Rated power of the motor expressed in HP (Horse Power)
8)	"Hz"	Frequency
9)	"min-1"	Speed of rotation
10)	"P/N°"	Pump item number
11)	"N"	Material code
12)	"MEI"	Index of the pump's quality in relation to its efficiency
13)	"Hyd. Eff. "	Hydraulic efficiency of the pump

EBARA Pumps Europe reserves the right to make changes without prior notice

PERFORMANCE RANGE
EVM(.)32-45-64

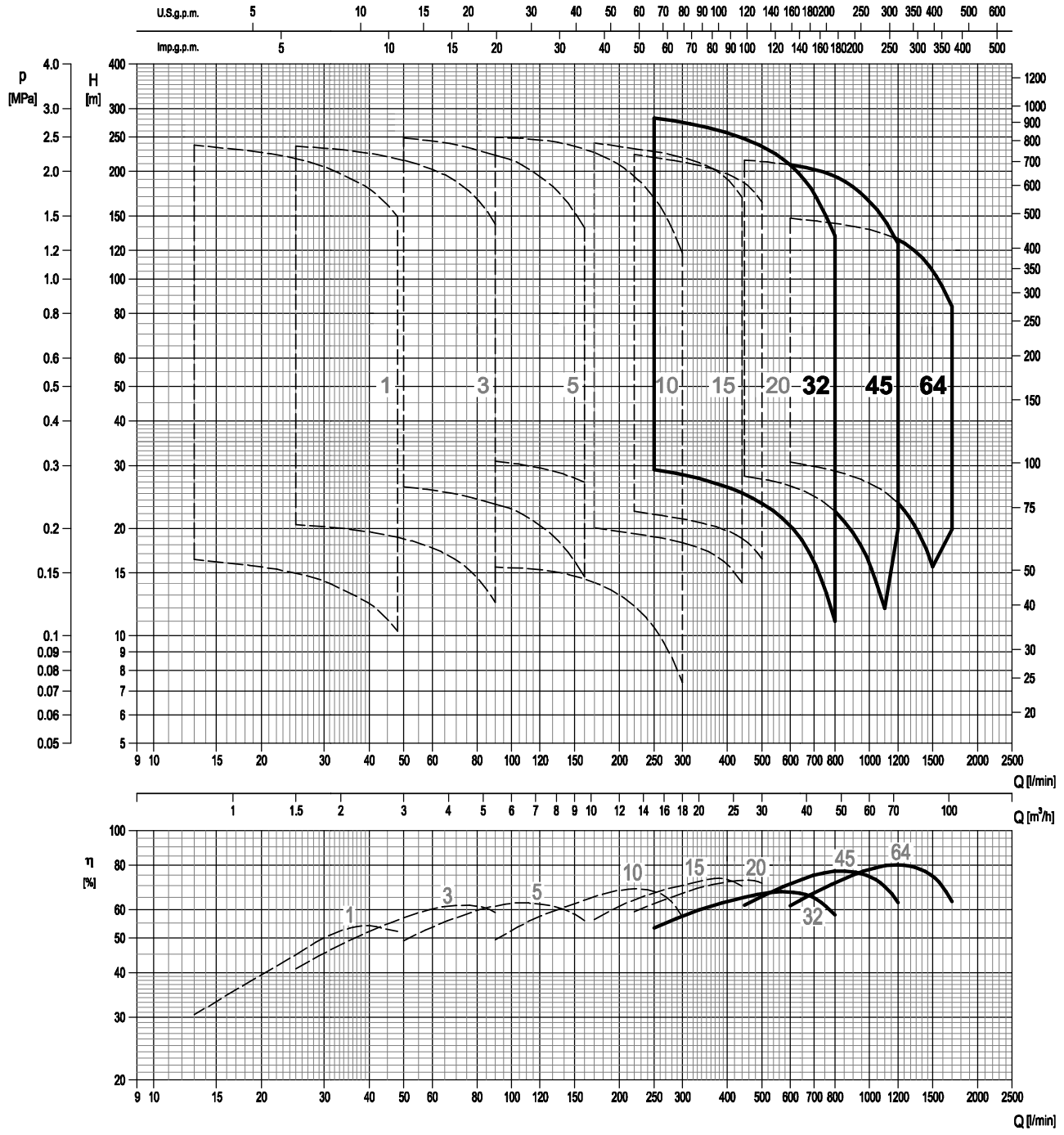

EBARA Pumps Europe

EBARA Pumps Europe reserves the right to make changes without prior notice

CURVE SPECIFICATIONS

The specifications below qualify the curves shown on the following pages.

Tolerances according to ISO 9906:2012 - Grade 3B.
The curves refer to effective speed of asynchronous motors at 60 Hz, 2 poles.
Measurements were carried out with clean water at 20°C of temperature and with a kinematic viscosity of ν = 1 mm^2/s (1 cSt).
The NPSH curve is an average curve obtained in the same conditions of performance curves.
During the pump selection, consider to get a safety margin of at least 0.5 m.
The continuous curves indicate the recommended working range. The dotted curve is only a guide.
In order to avoid the risk of over-heating, the pumps should not be used at a flow rate below 10% of best efficiency point.

Symbols explanation:

Q	=	volume flow rate
H	=	total head
P_2	=	pump power input (shaft power)
η	=	pump efficiency
NPSH	=	net positive suction head required by the pump

EBARA Pumps Europe reserves the right to make changes without prior notice

SELECTION CHART
EVM(.)32-45-64

	Pump Type	Motor			Maximum working pressure [MPa]	Q=Capacity										
						l/min 0	250	450	600	700	800	950	1100	1200	1500	1700
	Three phase	[kW]	[HP]	Size		m³/h 0	15	27	36	42	48	57	66	72	90	102
						H=Total manometric head in meters										
32	EVM(.)32 1-0F6/4.0	4.0	5.5	112 M	1.6	34.7	31.4	28.3	24.3	20.6	16.5	-	-	-	-	-
	EVM(.)32 2-2F6/5.5	5.5	7.5	132 S		56.5	52.5	43.5	33.6	25.7	-	-	-	-	-	-
	EVM(.)32 2-0F6/7.5	7.5	10	132 S		69.5	63	56.6	48.5	41	33.1	-	-	-	-	-
	EVM(.)32 3-3F6/7.5	7.5	10	132 S		84.5	79	65.3	50.5	38.5	-	-	-	-	-	-
	EVM(.)32 3-0F6/11	11	15	160 M		104	94	85	72.5	62	49.5	-	-	-	-	-
	EVM(.)32 4-3F6/11	11	15	160 M		119	110	93.5	74.5	59	-	-	-	-	-	-
	EVM(.)32 4-0F6/15	15	20	160 M		139	125	113	97	82.5	66	-	-	-	-	-
	EVM(.)32 5-3F6/15	15	20	160 M		152	143	124	99.5	79.5	61.5	-	-	-	-	-
	EVM(.)32 5-2F6/15	15	20	160 M		158	147	130	107	86.5	67.5	-	-	-	-	-
	EVM(.)32 5-0F6/18.5	18.5	25	160 L		169	157	141	121	100	79.5	-	-	-	-	-
	EVM(.)32 6-3F6/18.5	18.5	25	160 L	2.5	186	174	152	124	100	77.5	-	-	-	-	-
	EVM(.)32 6-0F6/22	22	30	180 M		203	189	170	145	121	95.5	-	-	-	-	-
	EVM(.)32 7-3F6/22	22	30	180 M		220	205	180	148	120	93	-	-	-	-	-
	EVM(.)32 7-2F6/22	22	30	180 M		221	210	186	155	127	99.5	-	-	-	-	-
	EVM(.)32 7-0F6/30	30	40	200 L		237	220	198	169	141	112	-	-	-	-	-
	EVM(.)32 8-3F6/30	30	40	200 L		254	237	209	172	140	109	-	-	-	-	-
	EVM(.)32 8-0F6/30	30	40	200 L	3.0	271	252	226	194	161	127	-	-	-	-	-
	EVM(.)32 9-3F6/30	30	40	200L		288	268	237	196	160	125	-	-	-	-	-
	EVM(.)32 9-0F6/30	30	40	200 L		305	283	255	218	181	143	-	-	-	-	-
	EVM(.)32 10-4F6/30	30	40	200 L		316	295	259	213	173	135	-	-	-	-	-
45	EVM(.)45 1-1F6/5.5	5.5	7.5	132 S	1.6	31	-	28	26.3	24.6	22.3	17.7	11.9	-	-	-
	EVM(.)45 1-0F6/7.5	7.5	10	132 S		39.8	-	36.9	35.6	34.4	32.7	28.8	23.8	20	-	-
	EVM(.)45 2-2F6/11	11	15	160 M		62	-	56.5	53.5	50.5	46	37.7	26.9	-	-	-
	EVM(.)45 2-1F6/11	11	15	160 M		71	-	65.5	63	60	56.5	49	38.7	-	-	-
	EVM(.)45 2-0F6/15	15	20	160 M		79.5	-	74.5	72	70	67	60	50.5	43.5	-	-
	EVM(.)45 3-3F6/15	15	20	160 M		93	-	85	80.5	76.5	70	57.5	42	-	-	-
	EVM(.)45 3-2F6/15	15	20	160 M		102	-	94	90	86	80.5	69	53.5	-	-	-
	EVM(.)45 3-1F6/18.5	18.5	25	160 L		111	-	103	99.5	96	91	80	65.5	54.5	-	-
	EVM(.)45 3-0F6/22	22	30	180 M		119	-	112	109	106	101	91	77.5	67	-	-
	EVM(.)45 4-3F6/18.5	18.5	25	160 L		133	-	122	117	112	104	89	68.5	53	-	-
	EVM(.)45 4-2F6/22	22	30	180 M		142	-	131	127	122	115	100	80.5	65.5	-	-
	EVM(.)45 4-1F6/30	30	40	200 L		150	-	140	136	131	125	111	92.5	78	-	-
	EVM(.)45 4-0F6/30	30	40	200 L		159	-	149	145	141	135	122	104	91	-	-
	EVM(.)45 5-3F6/30	30	40	200 L	2.5	173	-	160	154	148	139	120	95	76.5	-	-
	EVM(.)45 5-2F6/30	30	40	200 L		181	-	169	163	157	149	131	107	89	-	-
	EVM(.)45 5-1F6/30	30	40	200 L		190	-	178	172	167	159	142	119	102	-	-
	EVM(.)45 5-0F6/37	37	50	200 L		199	-	187	182	177	170	153	131	114	-	-
	EVM(.)45 6-3F6/37	37	50	200 L		212	-	197	190	183	173	151	122	100	-	-
	EVM(.)45 6-2F6/37	37	50	200 L		221	-	206	200	193	183	162	134	113	-	-
	EVM(.)45 6-1F6/37	37	50	200 L		230	-	215	209	203	194	173	146	125	-	-
64	EVM(.)64 1-1F6/7.5	7.5	10	132 S	1.6	33.9	-	-	30.7	29.8	28.9	27.4	25.3	23.5	15.6	-
	EVM(.)64 1-0F6/11	11	15	160 M		42.5	-	-	38.5	37.7	36.8	35.6	33.9	32.5	26	19.9
	EVM(.)64 2-2F6/15	15	20	160 M		68	-	-	62	60.5	59	56.5	53	49.5	35.3	-
	EVM(.)64 2-1F6/18.5	18.5	25	160 L		76.5	-	-	70	68.5	67	64.5	61.5	58.5	45.5	33.4
	EVM(.)64 2-0F6/22	22	30	180 M		85	-	-	77.5	76	75	73	70	67.5	56	45
	EVM(.)64 3-3F6/22	22	30	180 M		102	-	-	93.5	91	89	85.5	80.5	76	55	-
	EVM(.)64 3-2F6/30	30	40	200 L		110	-	-	101	99	97	93.5	89	84.5	65.5	47
	EVM(.)64 3-1F6/30	30	40	200 L		119	-	-	109	107	105	102	97.5	93.5	75.5	58.5
	EVM(.)64 3-0F6/30	30	40	200 L		128	-	-	117	115	113	110	106	103	86	70
	EVM(.)64 4-3F6/30	30	40	200 L		144	-	-	132	130	127	123	116	111	85	60.5
	EVM(.)64 4-2F6/37	37	50	200 L		153	-	-	140	138	135	131	125	120	95.5	72
	EVM(.)64 4-1F6/37	37	50	200 L		162	-	-	148	146	143	139	134	129	106	83.5

1.6 MPa=16 bar ; 2.5 MPa=25 bar ; 3.0 MPa=30 bar

EBARA Pumps Europe reserves the right to make changes without prior notice

PERFORMANCE CURVE
EVM(L)32

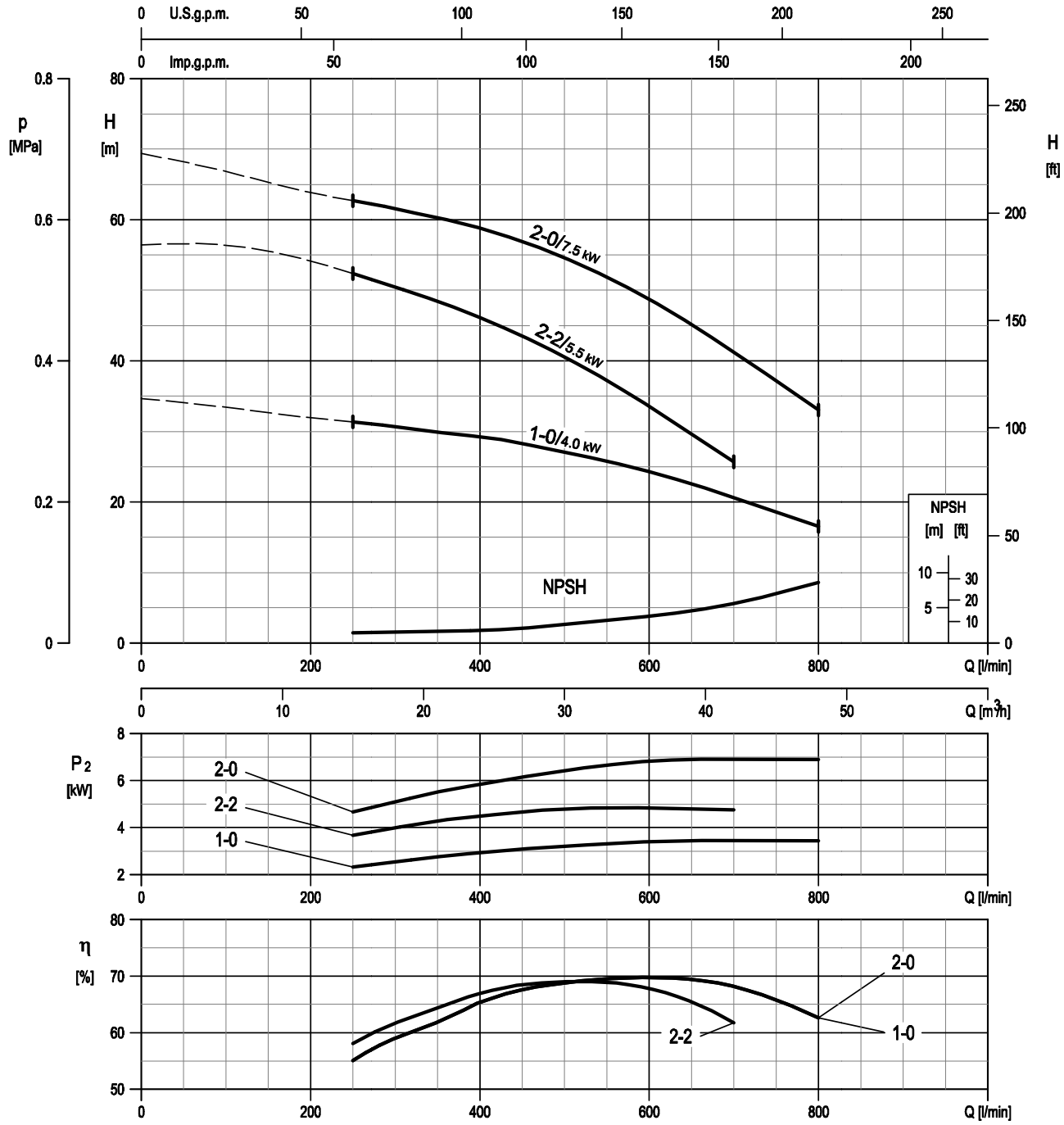

Rotation speed ≈3500 min-1
Test standard: ISO 9906:2012 - Grade 3B

EBARA Pumps Europe
EBARA Pumps Europe reserves the right to make changes without prior notice

PERFORMANCE CURVE
EVM(L)32

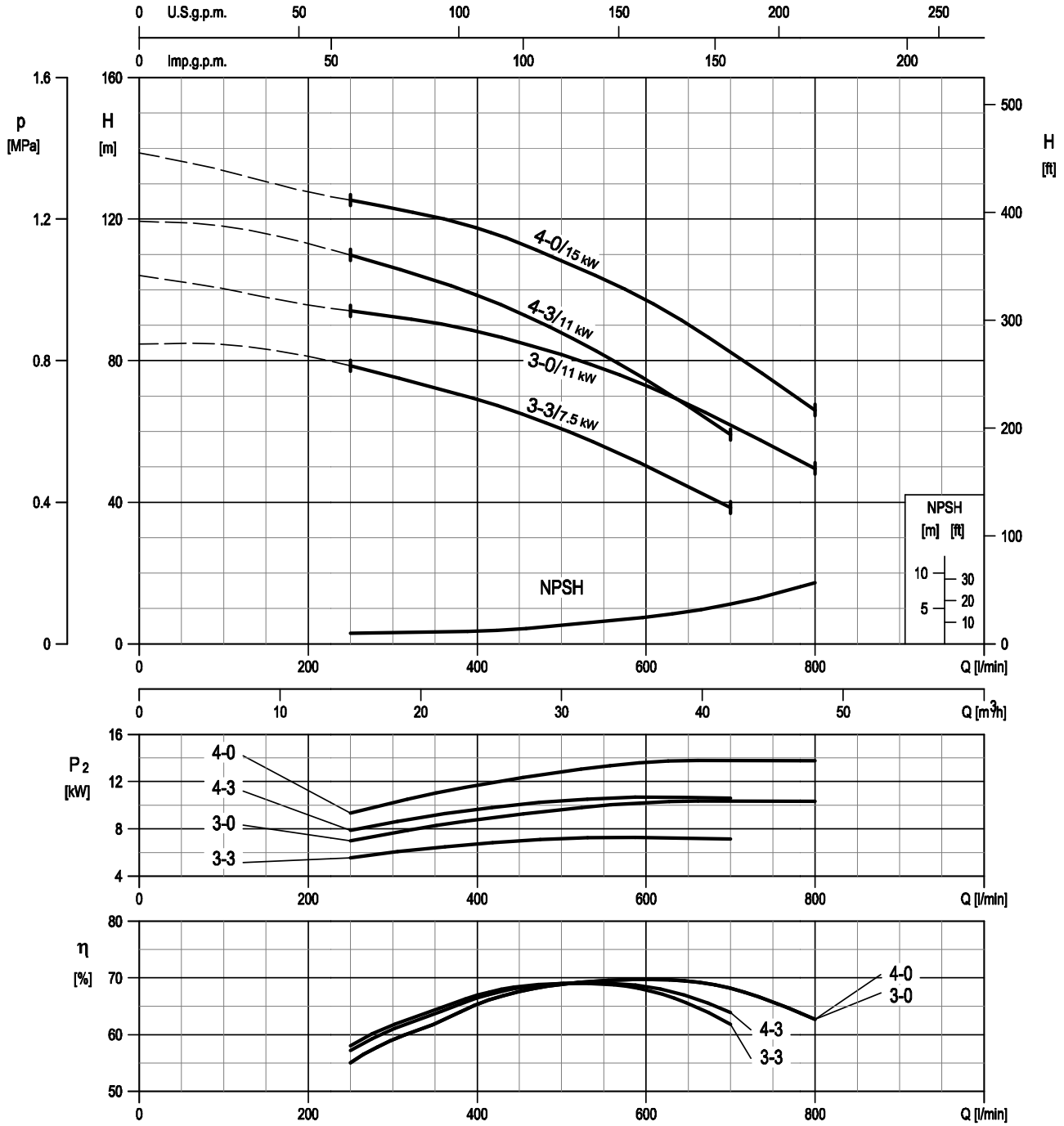

Rotation speed ≈3500 min-1
Test standard: ISO 9906:2012 - Grade 3B

EBARA Pumps Europe

EBARA Pumps Europe reserves the right to make changes without prior notice

PERFORMANCE CURVE
EVM(L)32

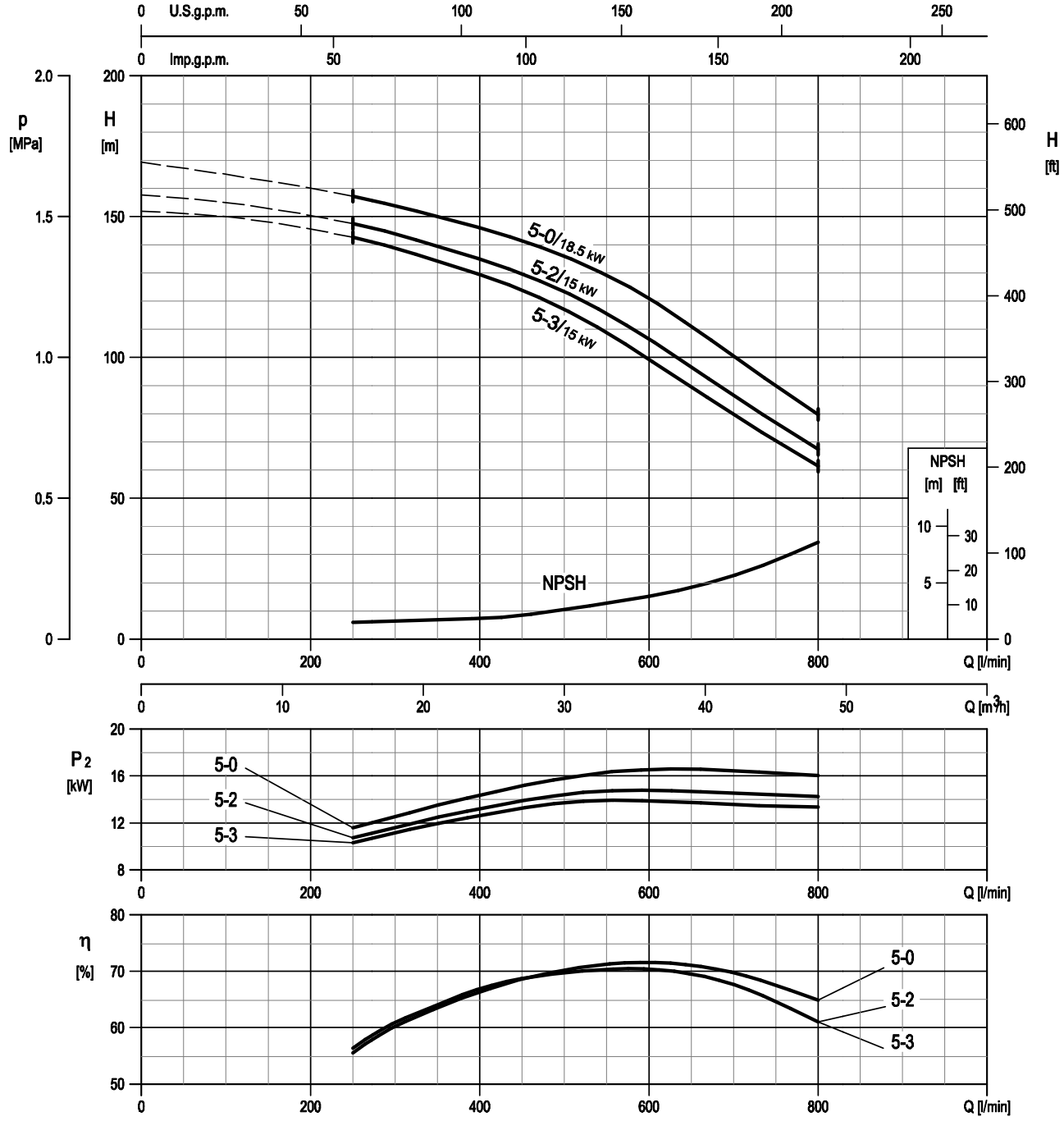

Rotation speed ≈3500 min-1
Test standard: ISO 9906:2012 - Grade 3B

EBARA
EBARA Pumps Europe
EBARA Pumps Europe reserves the right to make changes without prior notice

PERFORMANCE CURVE
EVM(L)32

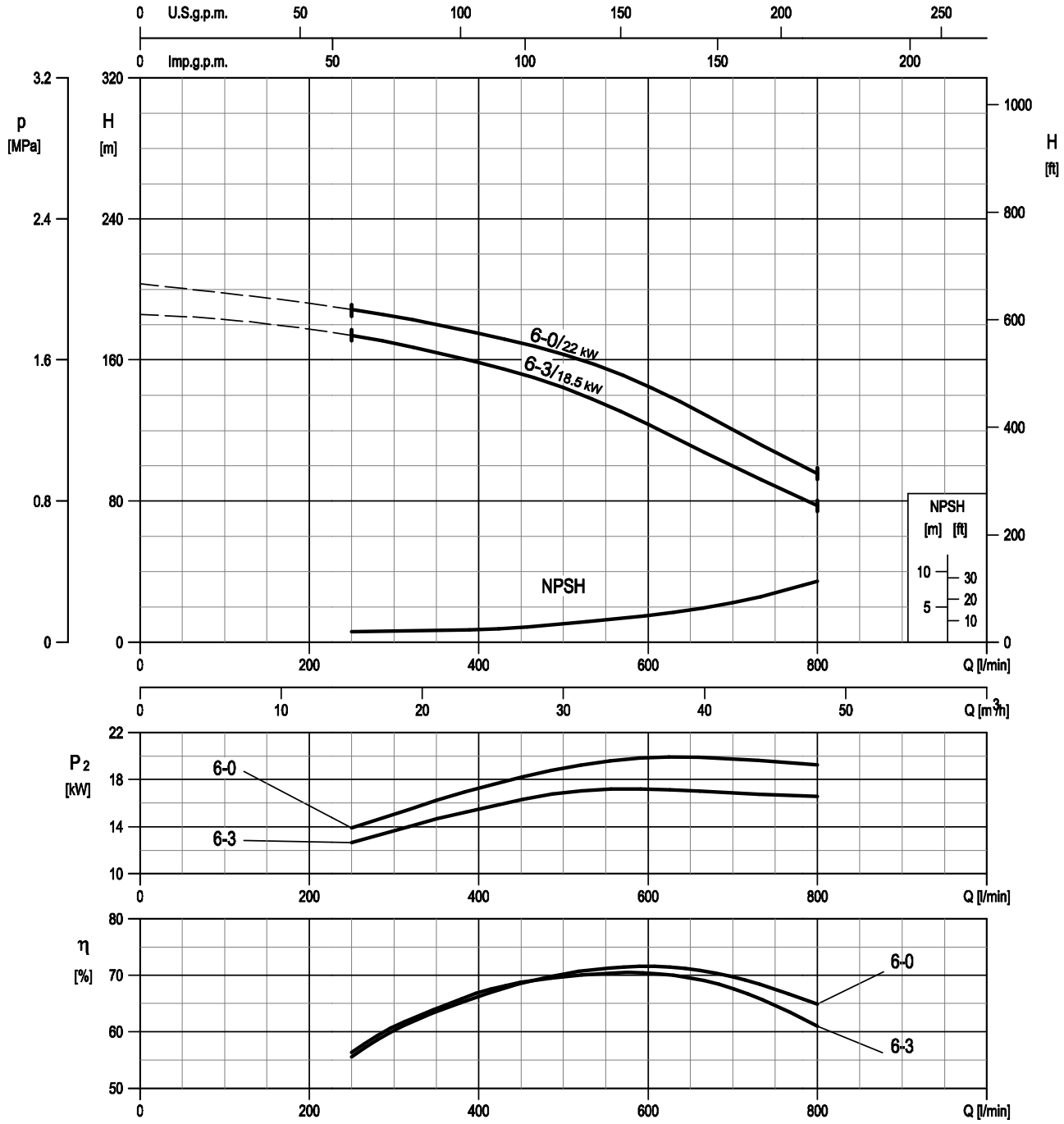

Rotation speed ≈3500 min-1
Test standard: ISO 9906:2012 - Grade 3B

EBARA Pumps Europe

EBARA Pumps Europe reserves the right to make changes without prior notice

PERFORMANCE CURVE
EVM(L)32

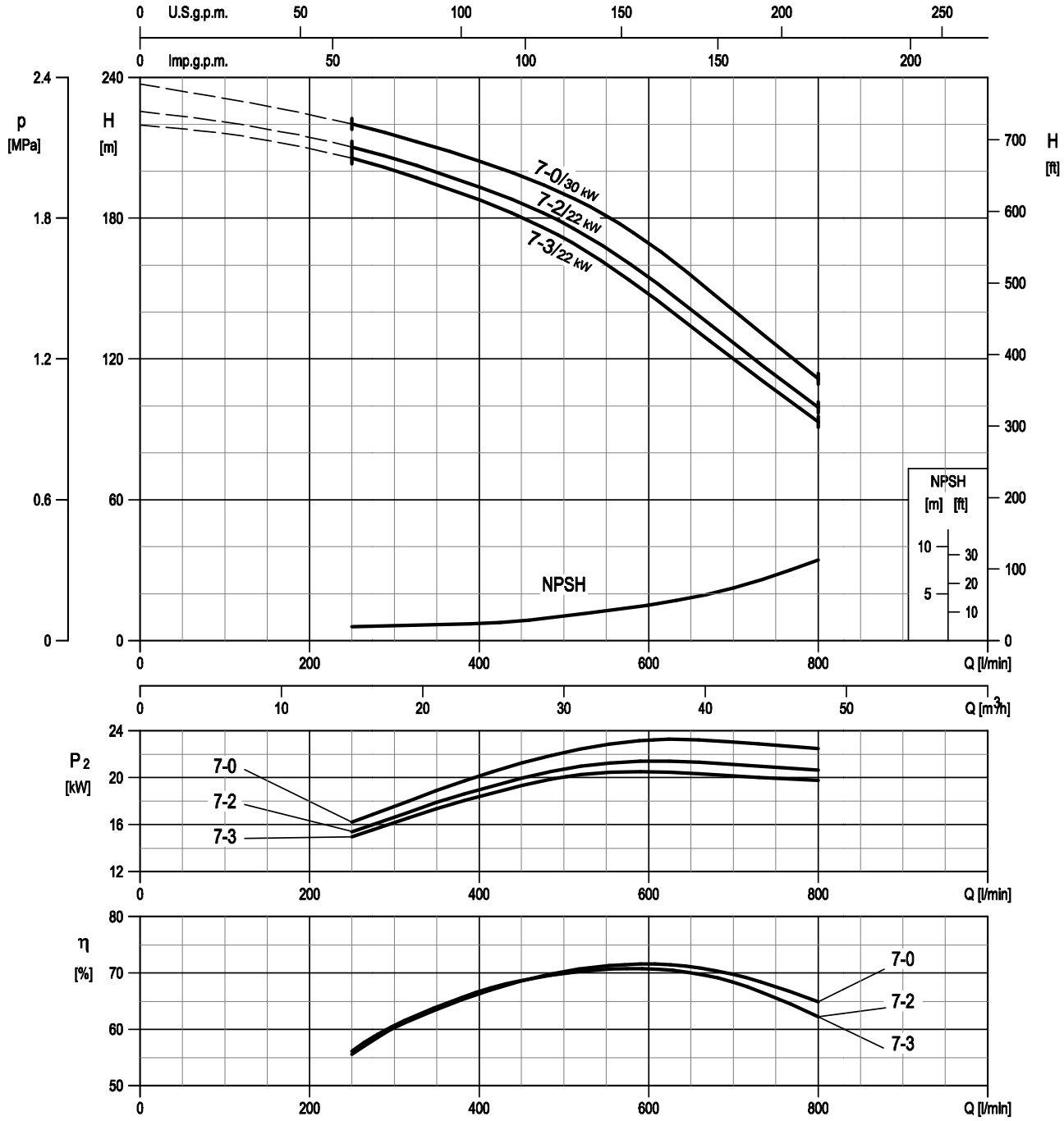

Rotation speed ≈3500 min-1
Test standard: ISO 9906:2012 - Grade 3B

EBARA Pumps Europe
EBARA Pumps Europe reserves the right to make changes without prior notice

PERFORMANCE CURVE
EVM(L)32

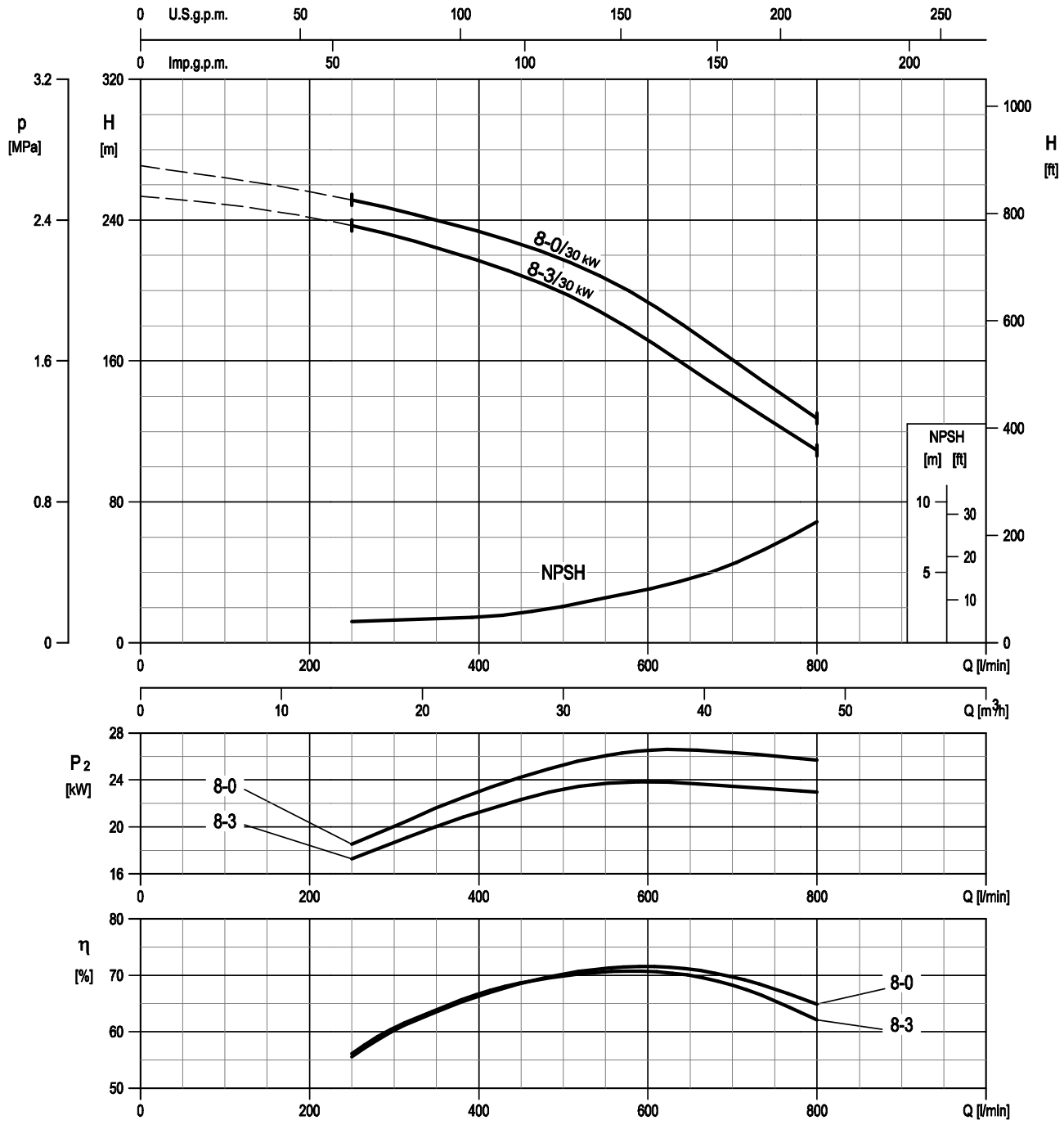

Rotation speed ≈3500 min-1
Test standard: ISO 9906:2012 - Grade 3B

EBARA Pumps Europe

EBARA Pumps Europe reserves the right to make changes without prior notice

PERFORMANCE CURVE
EVM(L)32

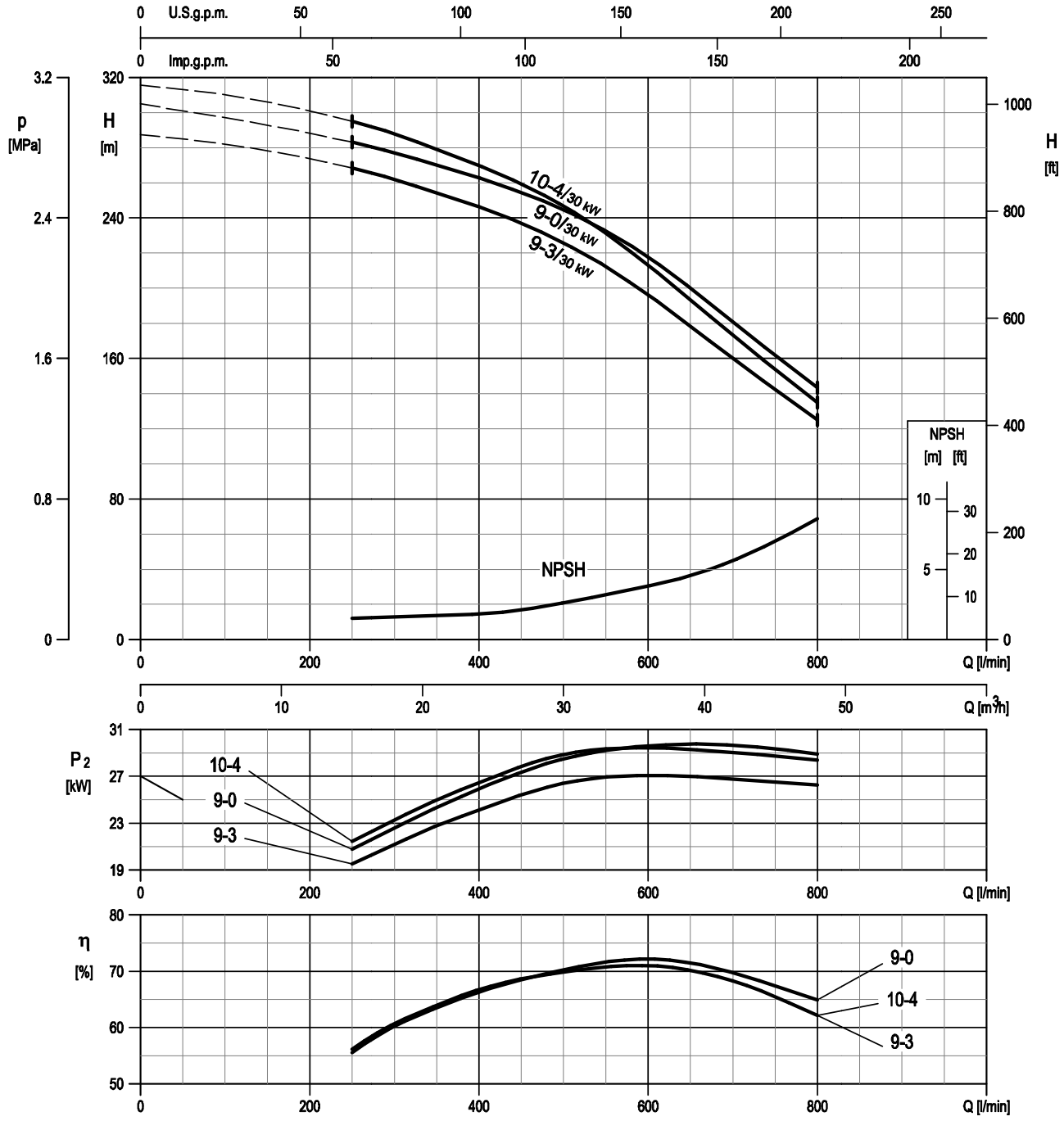

Rotation speed ≈3500 min-1
Test standard: ISO 9906:2012 - Grade 3B

EBARA Pumps Europe reserves the right to make changes without prior notice

TECHNICAL DATA
EVM(L)32

Dimensional sketch

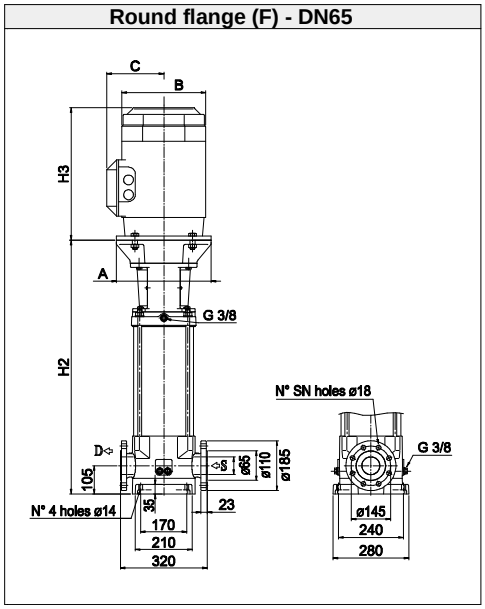

Dimensions [mm] and Weights [Kg]

Pump Type	Pmax [MPa]	Motor kW	Size	A	3 ~ B	C	H3	Round flange (F) H2	SN	Weight Pump	Weight Pump + Motor
EVM(L)32 1-0F6/4.0	1.6	4.0	112 M	160	196	155	306	503	4	56	#RIF!
EVM(L)32 2-2F6/5.5	1.6	5.5	132 S	300	225	160	328	524	4	58	96.6
EVM(L)32 2-0F6/7.5	1.6	7.5	132 S	300	225	160	350	524	4	58	98.4
EVM(L)32 3-3F6/7.5	1.6	7.5	132 S	300	225	160	350	572	4	74	114.4
EVM(L)32 3-0F6/11	1.6	11	160 M	350	248	194	476	703	4	74	136.5
EVM(L)32 4-3F6/11	1.6	11	160 M	350	248	194	476	751	4	77	139.5
EVM(L)32 4-0F6/15	1.6	15	160 M	350	317	238	498	751	4	77	165.9
EVM(L)32 5-3F6/15	1.6	15	160 M	350	317	238	498	799	4	96	184.9
EVM(L)32 5-2F6/15	1.6	15	160 M	350	317	238	498	799	4	96	184.9
EVM(L)32 5-0F6/18.5	1.6	18.5	160 L	350	317	238	542	799	4	96	200
EVM(L)32 6-3F6/18.5	2.5	18.5	160 L	350	317	238	542	847	8	99	203
EVM(L)32 6-0F6/22	2.5	22	180 M	350	360	268	577	847	8	99	262
EVM(L)32 7-3F6/22	2.5	22	180 M	350	360	268	577	895	8	102	265
EVM(L)32 7-2F6/22	2.5	22	180 M	350	360	268	577	895	8	102	265
EVM(L)32 7-0F6/30	2.5	30	200 L	400	399	300	658	910	8	105	333
EVM(L)32 8-3F6/30	2.5	30	200 L	400	399	300	658	958	8	105	333
EVM(L)32 8-0F6/30	3.0	30	200 L	400	399	300	658	958	8	105	333
EVM(L)32 9-3F6/30	3.0	30	200 L	400	399	300	658	1006	8	108	336
EVM(L)32 9-0F6/30	3.0	30	200 L	400	399	300	658	1006	8	108	336
EVM(L)32 10-4F6/30	3.0	30	200 L	400	399	300	658	1054	8	108	336

1.6 MPa=16 bar ; 2.5 MPa=25 bar; 3.0 MPa=30 bar

EBARA Pumps Europe reserves the right to make changes without prior notice

SECTIONAL VIEW
EVM(L)32

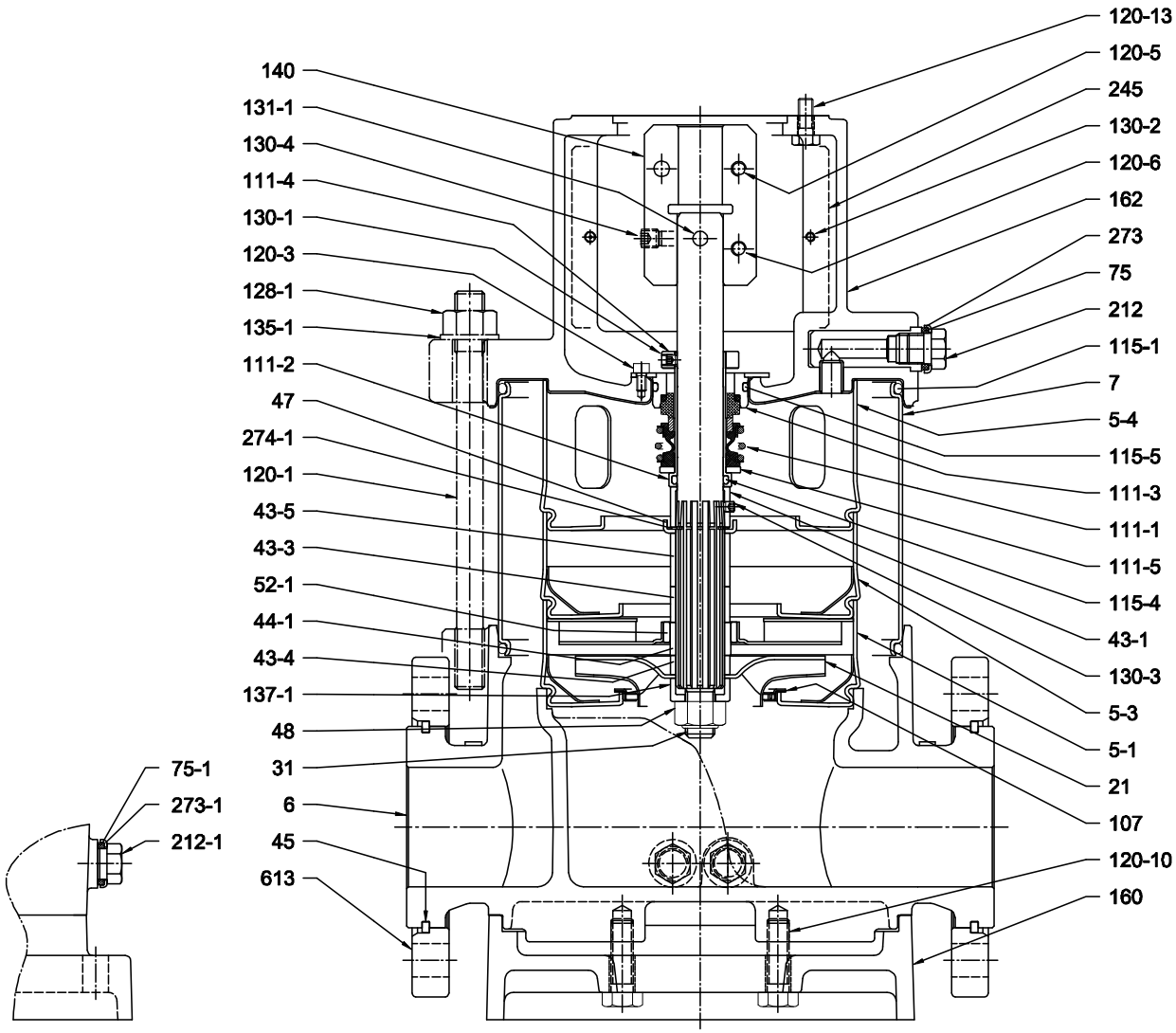

Pump without ball bearing

EBARA
EBARA Pumps Europe
EBARA Pumps Europe reserves the right to make changes without prior notice

SECTIONAL VIEW
EVM(L)32

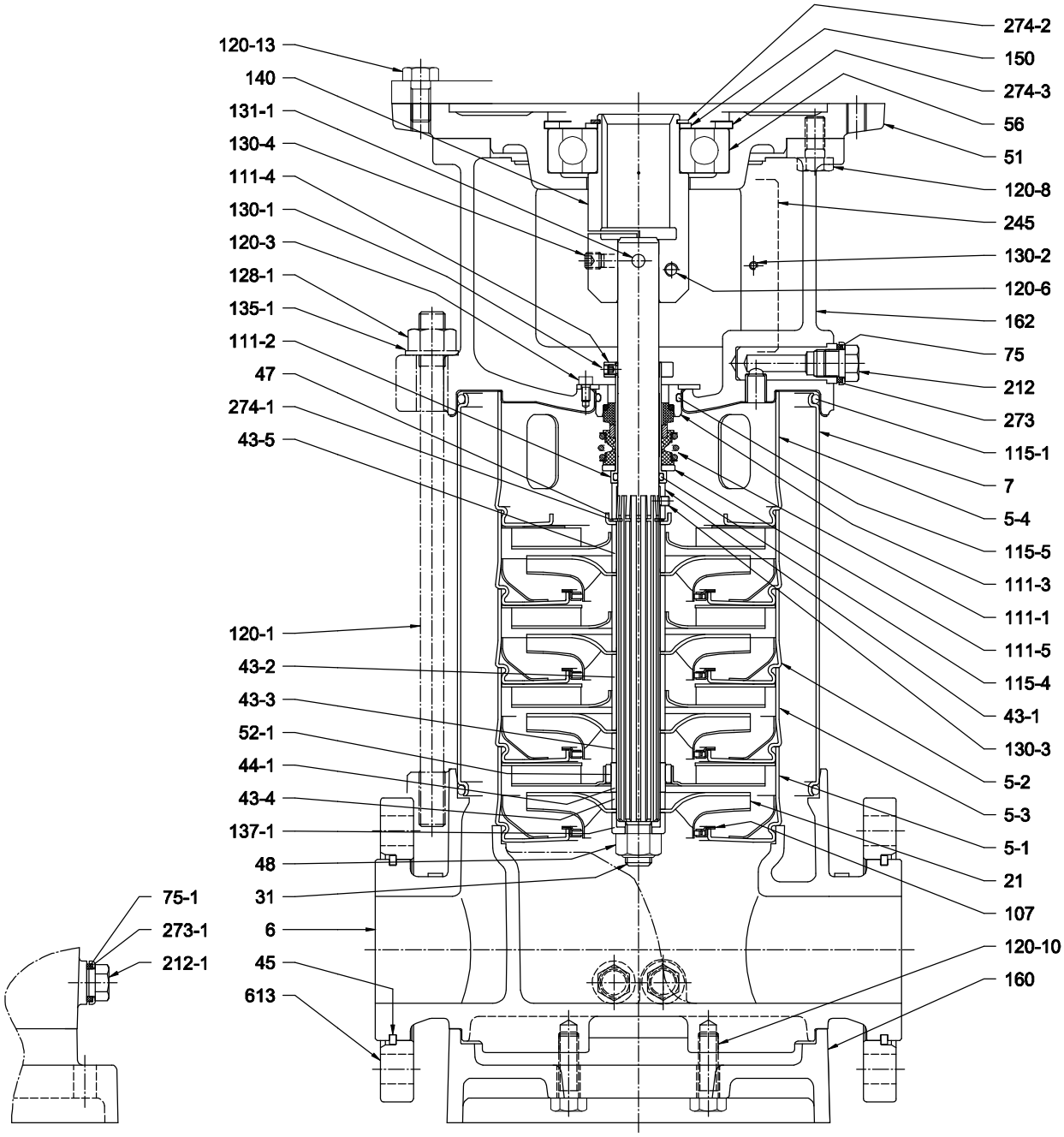

Pump with single ball bearing

EBARA Pumps Europe reserves the right to make changes without prior notice

SECTIONAL VIEW
EVM(L)32

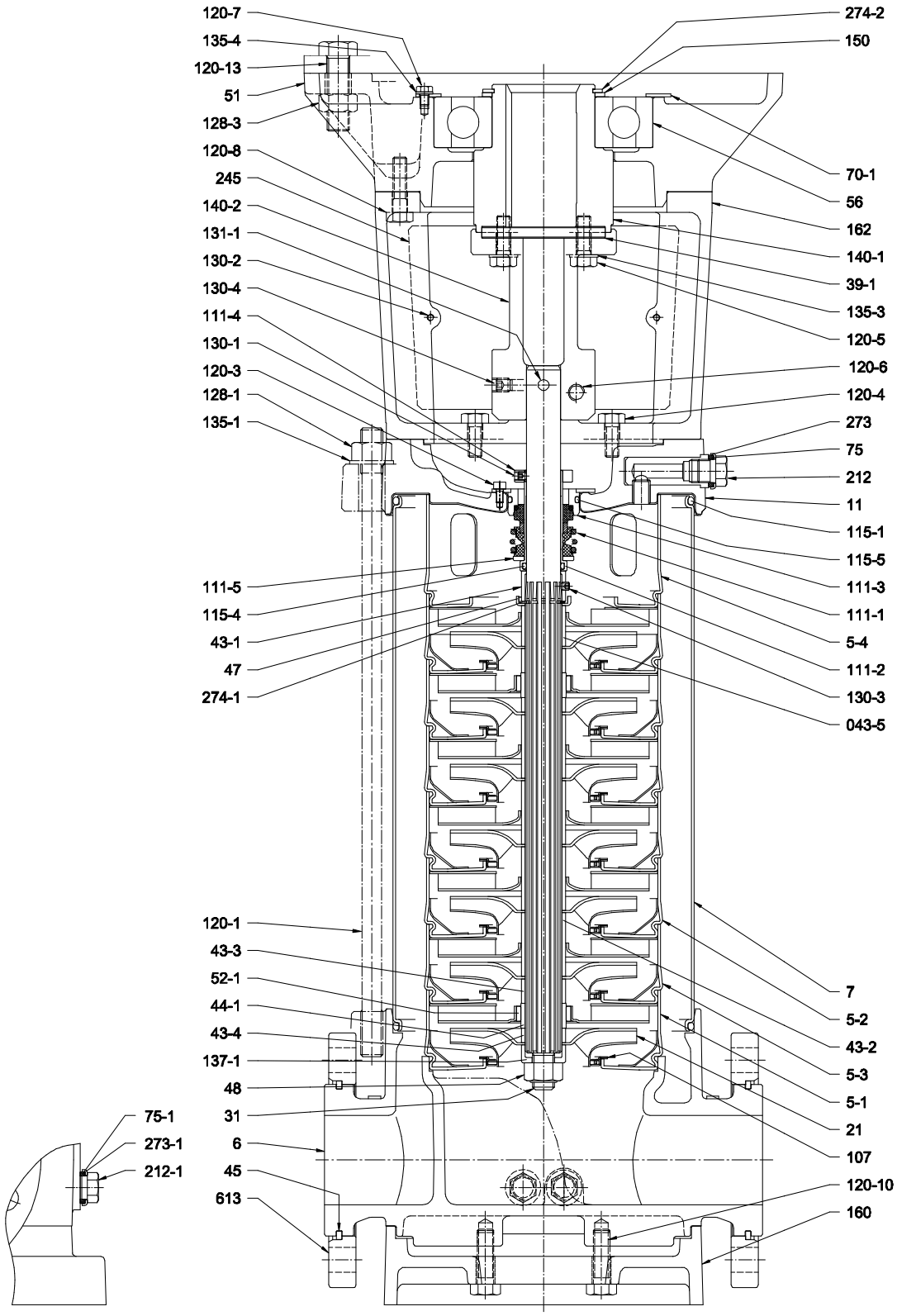

Pump with single ball bearing

EBARA Pumps Europe reserves the right to make changes without prior notice

SECTIONAL VIEW
EVM(L)32

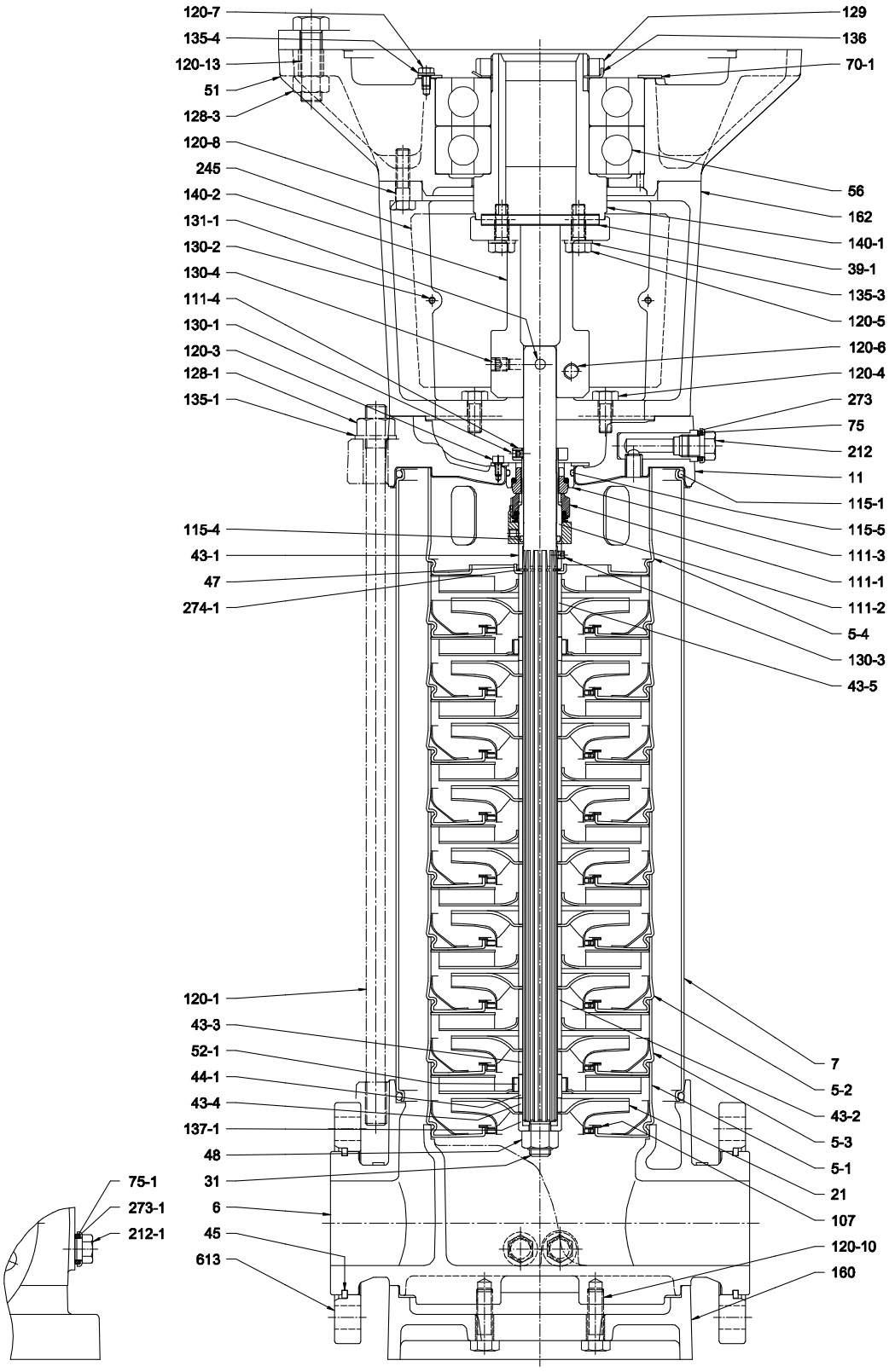

Pump with double ball bearing

EBARA Pumps Europe reserves the right to make changes without prior notice

SECTIONAL TABLE
EVM(L)32

N°	PART NAME	MATERIAL		DIMENSIONS	STANDARD
		EVM	EVML		
5-1	Suction casing	EN 1.4301 (AISI 304)	EN 1.4401 (AISI 316)		
5-2	Intermediate Casing	EN 1.4301 (AISI 304)	EN 1.4401 (AISI 316)		
5-3	Intermediate casing bearing	EN 1.4301 (AISI 304)	EN 1.4401 (AISI 316)		
5-4	Discharge casing	EN 1.4301 (AISI 304)	EN 1.4401 (AISI 316)		
6	Bottom casing	EN 1.4308 (ASTM CF8)	EN 1.4408 (ASTM CF8M)		
7	Outer casing	EN 1.4301 (AISI 304)	EN 1.4401 (AISI 316)		
11	Casing cover	Cast iron+ EN 1.4301 (AISI 304)	Cast iron + EN 1.4401 (AISI 316)		
21	Impeller	EN 1.4301 (AISI 304)	EN 1.4401 (AISI 316)		
21-1	Reduced impeller				
31	Shaft	EN 1.4401 (AISI 316)			
39-1	Key	Carbon Steel		12X8X90	UNI 6604
43-1	Shaft sleeve (mechanical seal)	EN 1.4301 (AISI 304)	EN 1.4401 (AISI 316)		
43-2	Shaft sleeve (intermediate)	EN 1.4301 (AISI 304)	EN 1.4401 (AISI 316)		
43-3	Shaft sleeve (bearing)	EN 1.4301 (AISI 304)	EN 1.4401 (AISI 316)		
43-4	Shaft sleeve (adjustment)	EN 1.4301 (AISI 304)	EN 1.4401 (AISI 316)		
43-5	Shaft sleeve (last stage)	EN 1.4301 (AISI 304)	EN 1.4401 (AISI 316)		
44-1	Shaft sleeve bearing	Tungsten carbide			
45	Flange holder	EN 1.402 (AISI 420)			
47	Ring Holder	EN 1.4301 (AISI 304)	EN 1.4401 (AISI 316)		
48	Impeller nut	A2-70 UNI 7323 with inox insert	A4-70 UNI 7323 with inox insert	M16	
51	Motor adapter	Cast iron EN-GJL-200-EN 1561			
52-1	Bearing	Tungsten carbide			
56	Ball bearing	see table page 322			
70-1	Ring for bearing	EN 1.4301 (AISI 304)			
75	O-Ring (plug)	EPDM	FPM		
75-1	O-Ring (plug)	EPDM	FPM		
107	Liner ring	PTFE / EN 1.4301 (AISI 304)	PTFE / EN 1.4401 (AISI 316)		
111-1	Mechanical seal	Silicon carbide / Carbon / FPM			
111-2	Mechanical seal cartridge	EN 1.4301 (AISI 304)	EN 1.4401 (AISI 316)		
111-3	Mechanical seal seat	EN 1.4301 (AISI 304)	EN 1.4401 (AISI 316)		
111-4	Seal holder	Brass OT 58 UNI 5705	EN 1.4401 (AISI 316)		
111-5	Adjusting ring	EN 1.4301 (AISI 304)	EN 1.4401 (AISI 316)		
115-1	O-Ring (outer casing)	EPDM	FPM	D.208.91 X5.34	
115-4	O-Ring (cartridge sleeve)	EPDM	FPM	D. 24.99X3.53	
115-5	O-Ring (seal cover)	EPDM	FPM	D.44.04X3.53	
120-1	Tie-rod	Galvanized steel 6.8 strenght class ISO 898/1			

EBARA Pumps Europe reserves the right to make changes without prior notice

SECTIONAL TABLE
EVM(L)32

N°	PART NAME		MATERIAL EVM	MATERIAL EVML	DIMENSIONS	STANDARD
120-3	Screw (mechanical seal)		A2-70 UNI 7323		M5X10	UNI 5731
120-4	Screw (casing cover)		Galvanized steel 8.8 strenght class ISO 898/1		M10X25	UNI 5793
120-5	Screw for coupling	EVM32 1	Galvanized steel 8.8 strenght class ISO 898/1		M8X20	UNI 5931
		EVM32 3 to 10			M10X30	UNI 5739
120-6	Screw for coupling	EVM32 1 to 3-3	Galvanized steel 8.8 strenght class ISO 898/1		M8X20	UNI 5931
		EVM32 3-0 to 10-3			M12X30	UNI 5931
120-7	Screw (bearing)		Galvanized steel 8.8 strenght class ISO 898/1		M6X10	UNI 5739
120-8	Screw (bearing housing)	EVM32 3-0 to 10-3	Galvanized steel 8.8 strenght class ISO 898/1		M10X30	UNI 5739
		EVM32 2-0 to 3-3			M12X25	UNI 5739
120-10	Screw (base plate)		Galvanized steel 8.8 strenght class ISO 898/1		M12X40	UNI 5739
120-13	Screw for motor	EVM32 1	Galvanized steel 8.8 strenght class ISO 898/1		M8X20	UNI 5739
		EVM32 2-0 to 3-3			M12X30	UNI 5739
		EVM32 3-0 to 10-3			M16X65	UNI 5739
128-1	Nut for tie rod		Galvanized steel		M 16	UNI 5588
128-3	Nut (motor)		Galvanized steel		M16	UNI 5588
129	Lock nut		Carbon Steel			
130-1	Set screw		A2-70 UNI 7323		M6X8	UNI 5923
130-2	Screw for coupling guard		A2-70 UNI 7323		M5X6	UNI 7687
130-3	Set screw (mechanical seal)		A2-70 UNI 7323		M6X6	UNI 5923
130-4	Set screw (coupling pin)		Carbon steel		M 10X10	UNI 5923
131-1	Pin for shaft		Carbon Steel			
135-1	Washer (Tie rod)		Galvanized steel		17X30X3	UNI 6592
135-3	Washer (coupling)		Galvanized steel		10.5X17.5X2.2	UNI 1751
135-4	Washer (bearing)		Carbon steel		6.4	UNI 1751
136	Locking washer (coupling)		Carbon steel			
137-1	Impeller spacer		EN 1.4301 (AISI 304)	EN 1.4401 (AISI 316)		
140	Coupling		Brass OT 58 UNI 5705			
140-1	Coupling (motor side)		Carbon steel			
140-2	Coupling (pump side)		Carbon steel			
150	Spacer		carbon steel			
160	Base		Cast iron EN-GJL-200-EN 1561			
162	Motor bracket		Cast iron EN-GJL-200-EN 1561			
212	Plug		EN 1.4301 (AISI 304)	EN 1.4401 (AISI 316)		
212-1	Plug		EN 1.4301 (AISI 304)	EN 1.4401 (AISI 316)		
245	Coupling guard		EN 1.4301 (AISI 304)			
273	Plug Washer		EN 1.4301 (AISI 304)	EN 1.4401 (AISI 316)		
273-1	Plug Washer		EN 1.4301 (AISI 304)	EN 1.4401 (AISI 316)		
274-1	C-type snap ring (mechanical seal)		EN 1.4301 (AISI 304)	EN 1.4401 (AISI 316)	Ø 26	UNI 7435
274-2	C-type snap ring (coupling)		Carbon Steel TC 80			
274-3	C-type snap ring (bracket)		Carbon Steel TC 80			
613	Flange		Carbon steel			

EBARA Pumps Europe reserves the right to make changes without prior notice

QUANTITY FOR MODEL EVM(L)32

Pump Type	N°																																
	5-2	5-3	11	21	21-1	39-1	43-2	43-3	43-4	44-1	51	52-1	56	70-1	107	111-5	120-4	120-5	120-7	120-8	128-3	129	135-3	135-4	136	140	140-1	140-2	150	274-2	274-3
EVM(L)32 1-0F6/4.0	/	1	/	1	/	/	/	1	1	1	/	1	/	/	1	1	/	2	/	/	/	/	/	/	/	1	/	/	/	/	/
EVM(L)32 2-2F6/5.5	/	1	/	/	2	/	/	1	1	1	1	1	1	/	2	1	/	/	/	4	/	/	/	/	/	1	/	/	1	1	1
EVM(L)32 2-0F6/7.5	/	1	/	2	/	/	/	1	1	1	1	1	1	/	2	1	/	/	/	4	/	/	/	/	/	1	/	/	1	1	1
EVM(L)32 3-3F6/7.5	1	1	/	/	3	/	1	1	1	1	1	1	1	/	3	1	/	/	/	4	/	/	/	/	/	1	/	/	1	1	1
EVM(L)32 3-0F6/11	1	1	1	3	/	1	1	1	1	1	1	1	1	1	3	1	4	4	3	4	4	/	4	3	/	/	1	1	1	1	/
EVM(L)32 4-3F6/11	2	1	1	1	3	1	2	1	1	1	1	1	1	1	4	1	4	4	3	4	4	/	4	3	/	/	1	1	1	1	/
EVM(L)32 4-0F6/15	2	1	1	4	/	1	2	1	1	1	1	1	1	1	4	1	4	4	3	4	4	/	4	3	/	/	1	1	1	1	/
EVM(L)32 5-3F6/15	3	1	1	2	3	1	3	1	1	1	1	1	1	1	5	1	4	4	3	4	4	/	4	3	/	/	1	1	1	1	/
EVM(L)32 5-2F6/15	3	1	1	3	2	1	3	1	1	1	1	1	1	1	5	1	4	4	3	4	4	/	4	3	/	/	1	1	1	1	/
EVM(L)32 5-0F6/18.5	3	1	1	5	/	1	3	1	1	1	1	1	1	1	5	1	4	4	3	4	4	/	4	3	/	/	1	1	1	1	/
EVM(L)32 6-3F6/18.5	4	1	1	3	3	1	4	1	1	1	1	1	1	1	6	1	4	4	3	4	4	/	4	3	/	/	1	1	1	1	/
EVM(L)32 6-0F6/22	4	1	1	5	1	1	4	1	1	1	1	1	1	1	6	1	4	4	3	4	4	/	4	3	/	/	1	1	1	1	/
EVM(L)32 7-3F6/22	5	1	1	4	3	1	5	1	1	1	1	1	1	1	7	1	4	4	3	4	4	/	4	3	/	/	1	1	1	1	/
EVM(L)32 7-2F6/22	5	1	1	5	2	1	5	1	1	1	1	1	1	1	7	1	4	4	3	4	4	/	4	3	/	/	1	1	1	1	/
EVM(L)32 7-0F6/30	5	1	1	7	/	1	5	1	1	1	1	1	1	1	7	1	4	4	3	4	4	1	4	3	1	/	1	1	/	/	/
EVM(L)32 8-3F6/30	6	1	1	5	3	1	6	1	1	1	1	1	1	1	8	1	4	4	3	4	4	1	4	3	1	/	1	1	/	/	/
EVM(L)32 8-0F6/30	6	1	1	8	/	1	6	1	1	1	1	1	1	1	8	/	4	4	3	4	4	1	4	3	1	/	1	1	/	/	/
EVM(L)32 9-3F6/30	7	1	1	6	3	1	7	1	1	1	1	1	1	1	9	/	4	4	3	4	4	1	4	3	1	/	1	1	/	/	/
EVM(L)32 9-0F6/30	7	1	1	9	/	1	7	1	1	1	1	1	1	1	9	/	4	4	3	4	4	1	4	3	1	/	1	1	/	/	/
EVM(L)32 10-4F6/30	7	2	1	6	4	1	7	2	2	2	1	2	1	1	10	/	4	4	3	4	4	1	4	3	1	/	1	1	/	/	/

BEARINGS EVM(L)32

Pump Type	N° 56
EVM(L)32 1-0F6/4.0	/
EVM(L)32 2-2F6/5.5	6310 ZZ C3
EVM(L)32 2-0F6/7.5	6310 ZZ C3
EVM(L)32 3-3F6/7.5	6310 ZZ C3
EVM(L)32 3-0F6/11	6313 ZZ C3
EVM(L)32 4-3F6/11	6313 ZZ C3
EVM(L)32 4-0F6/15	6313 ZZ C3
EVM(L)32 5-3F6/15	6313 ZZ C3
EVM(L)32 5-2F6/15	6313 ZZ C3
EVM(L)32 5-0F6/18.5	6313 ZZ C3
EVM(L)32 6-3F6/18.5	6313 ZZ C3
EVM(L)32 6-0F6/22	6315 ZZ C3
EVM(L)32 7-3F6/22	6315 ZZ C3
EVM(L)32 7-2F6/22	6315 ZZ C3
EVM(L)32 7-0F6/30	6315 ZZDT C3*
EVM(L)32 8-3F6/30	6315 ZZDT C3*
EVM(L)32 8-0F6/30	6315 ZZDT C3*
EVM(L)32 9-3F6/30	6315 ZZDT C3*
EVM(L)32 9-0F6/30	6315 ZZDT C3*
EVM(L)32 10-4F6/30	6315 ZZDT C3*

*DT=Two single row deep groove ball bearings matched for paired mounting in a tandem arrangement.

EBARA Pumps Europe reserves the right to make changes without prior notice

PERFORMANCE CURVE
EVMG32

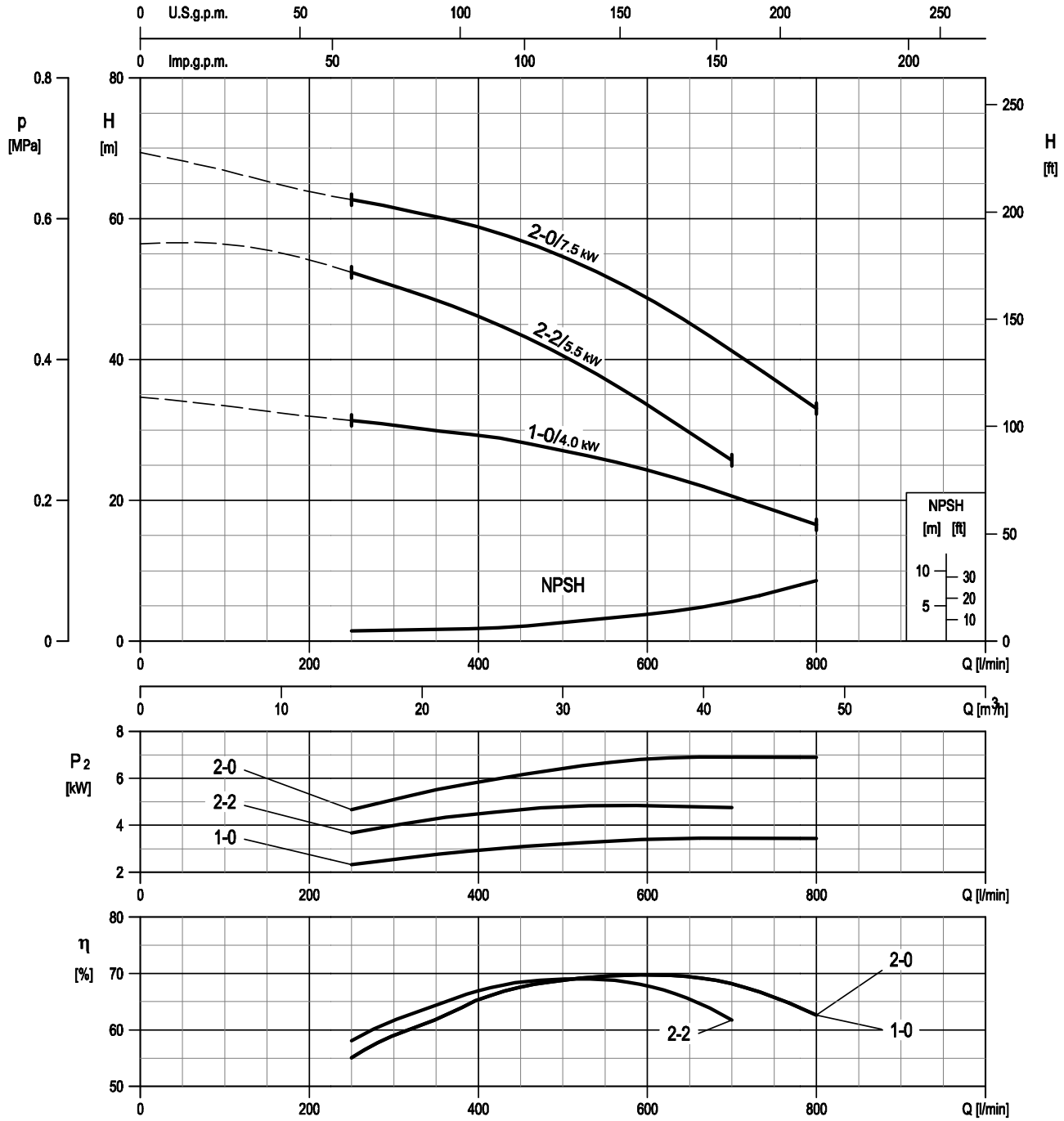

Rotation speed ≈3500 min-1
Test standard: ISO 9906:2012 - Grade 3B

EBARA Pumps Europe

EBARA Pumps Europe reserves the right to make changes without prior notice

PERFORMANCE CURVE
EVMG32

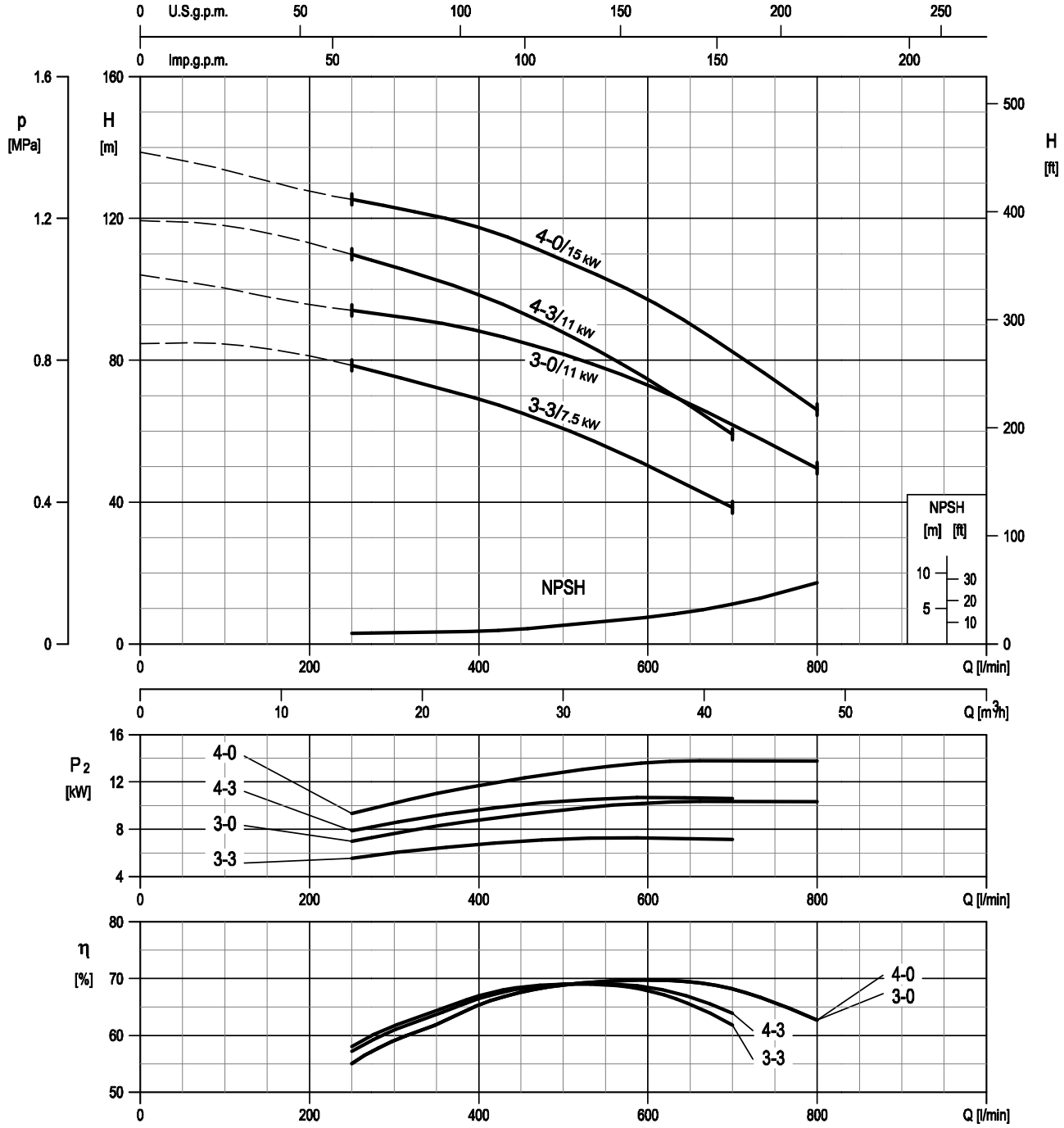

Rotation speed ≈3500 min-1
Test standard: ISO 9906:2012 - Grade 3B

EBARA Pumps Europe reserves the right to make changes without prior notice

PERFORMANCE CURVE
EVMG32

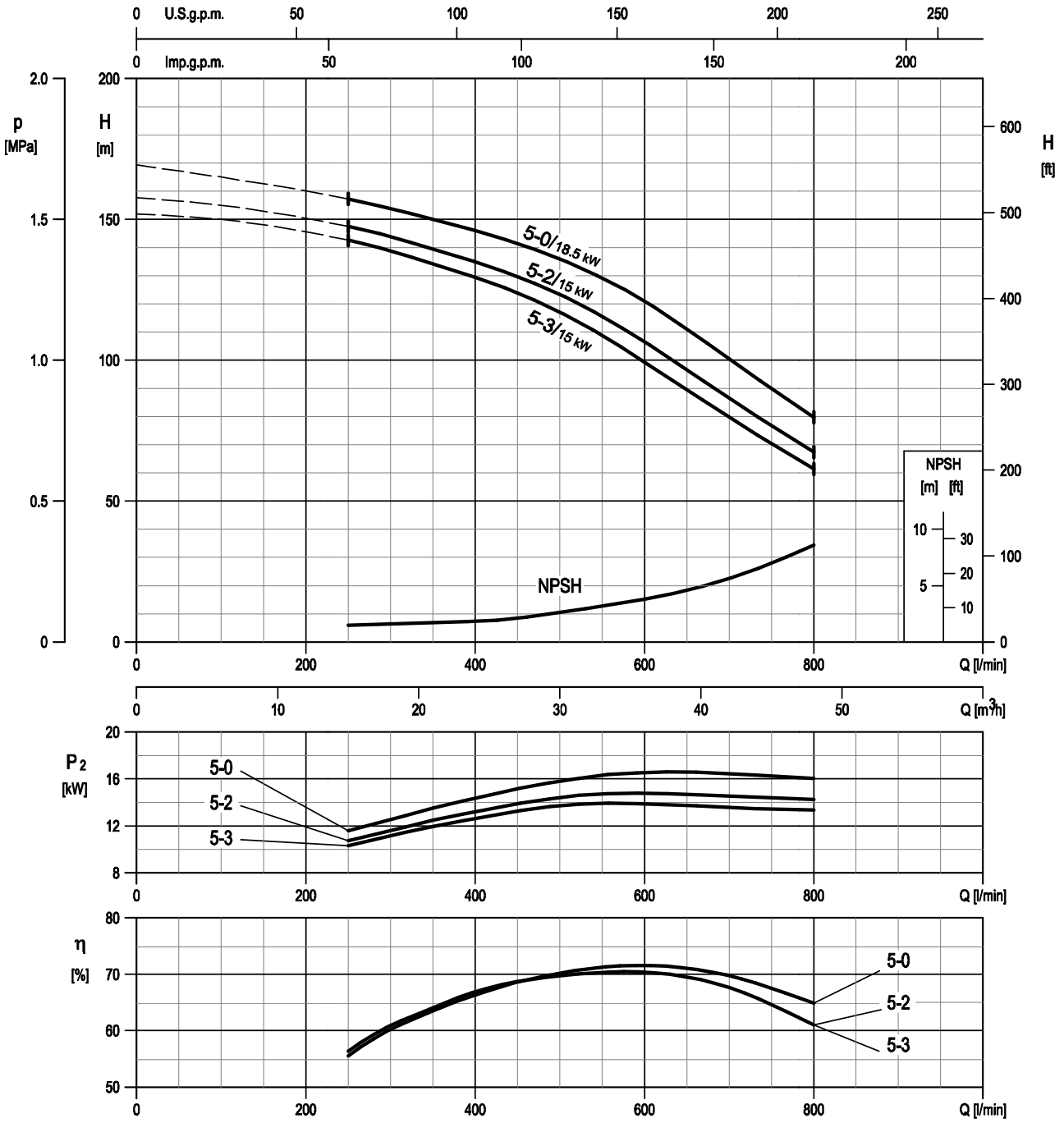

Rotation speed ≈3500 min-1
Test standard: ISO 9906:2012 - Grade 3B

EBARA Pumps Europe reserves the right to make changes without prior notice

PERFORMANCE CURVE
EVMG32

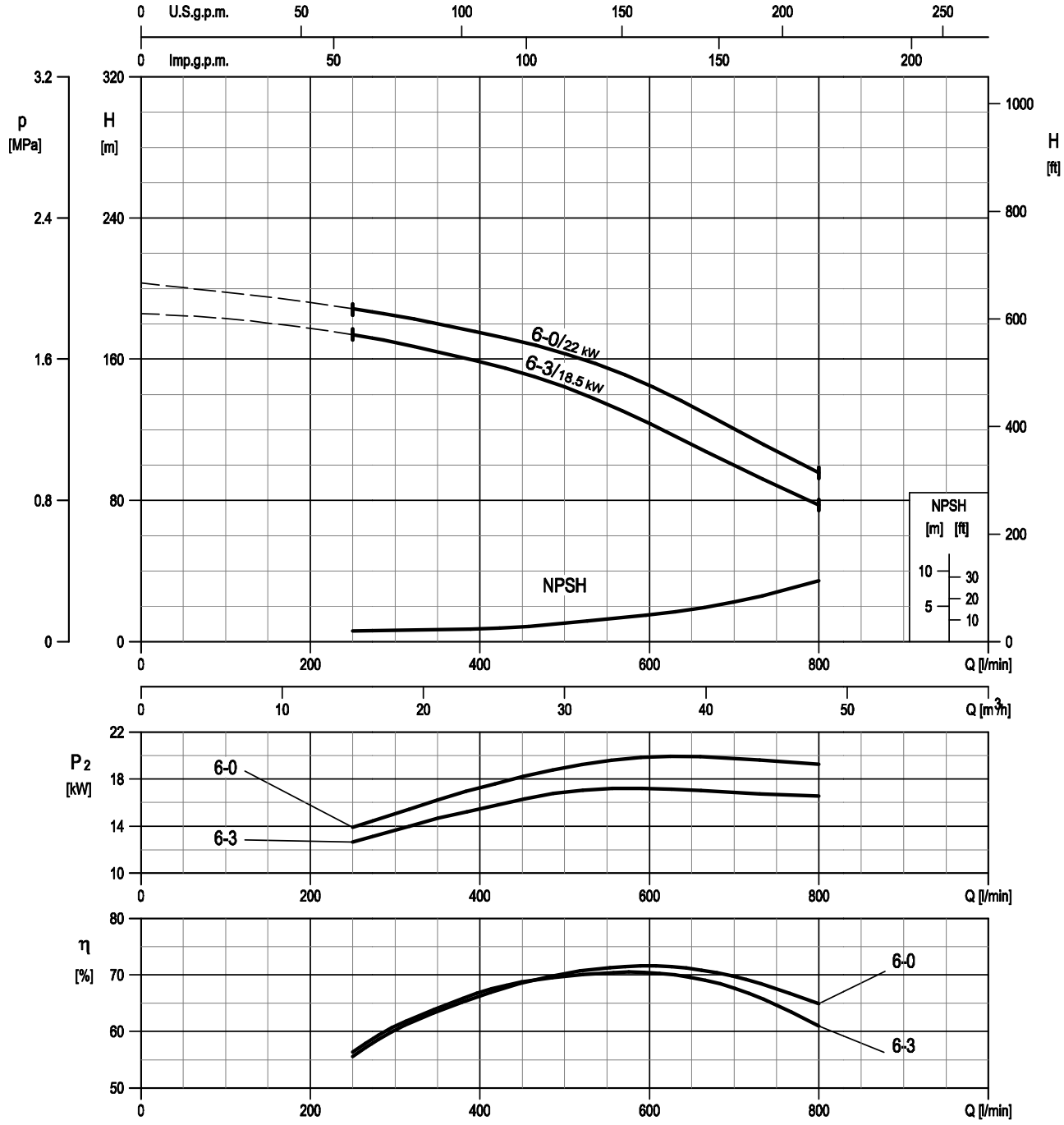

Rotation speed ≈3500 min-1
Test standard: ISO 9906:2012 - Grade 3B

EBARA Pumps Europe reserves the right to make changes without prior notice

PERFORMANCE CURVE
EVMG32

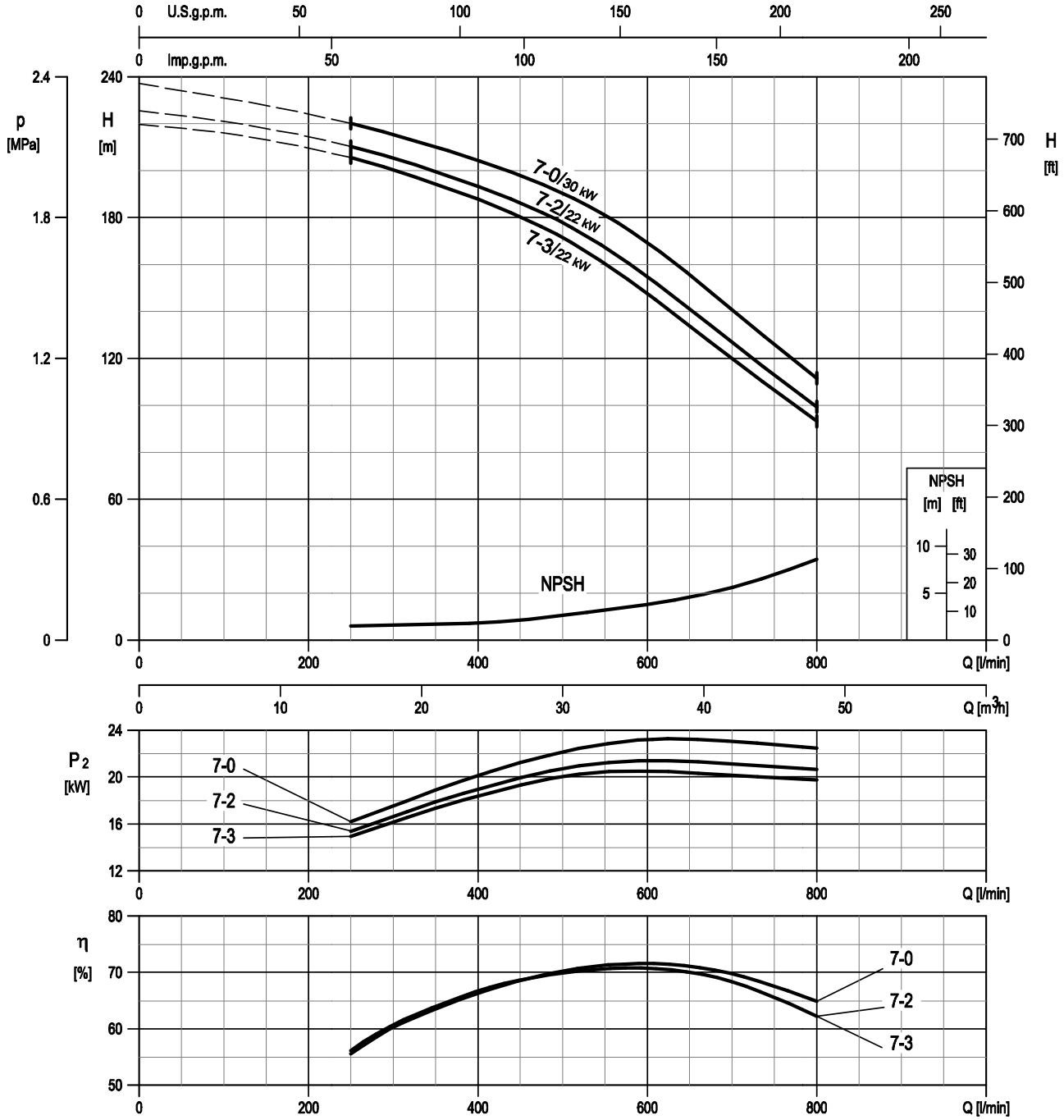

Rotation speed ≈3500 min-1
Test standard: ISO 9906:2012 - Grade 3B

EBARA Pumps Europe reserves the right to make changes without prior notice

PERFORMANCE CURVE
EVMG32

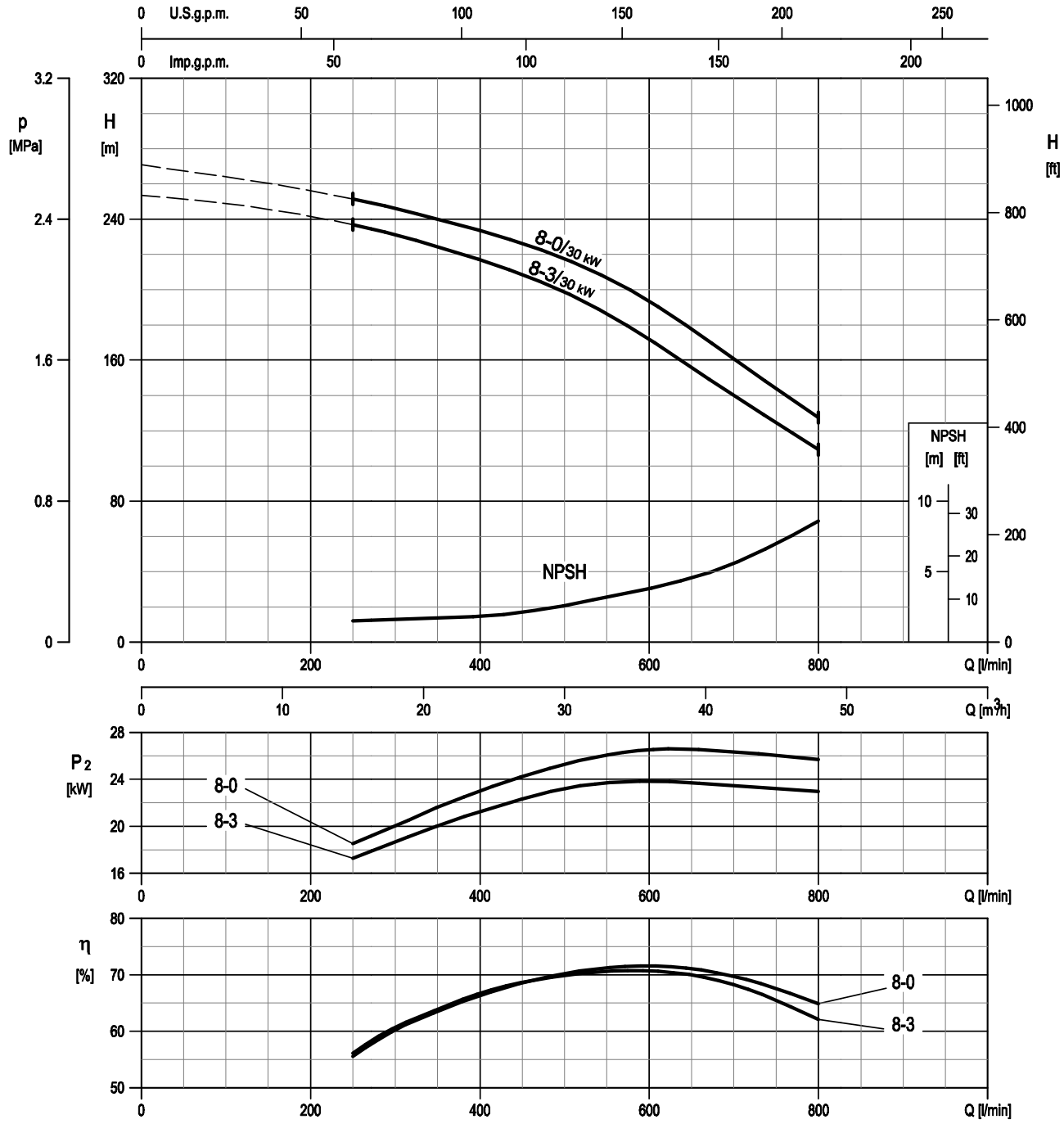

Rotation speed ≈3500 min-1
Test standard: ISO 9906:2012 - Grade 3B

EBARA
EBARA Pumps Europe
EBARA Pumps Europe reserves the right to make changes without prior notice

PERFORMANCE CURVE
EVMG32

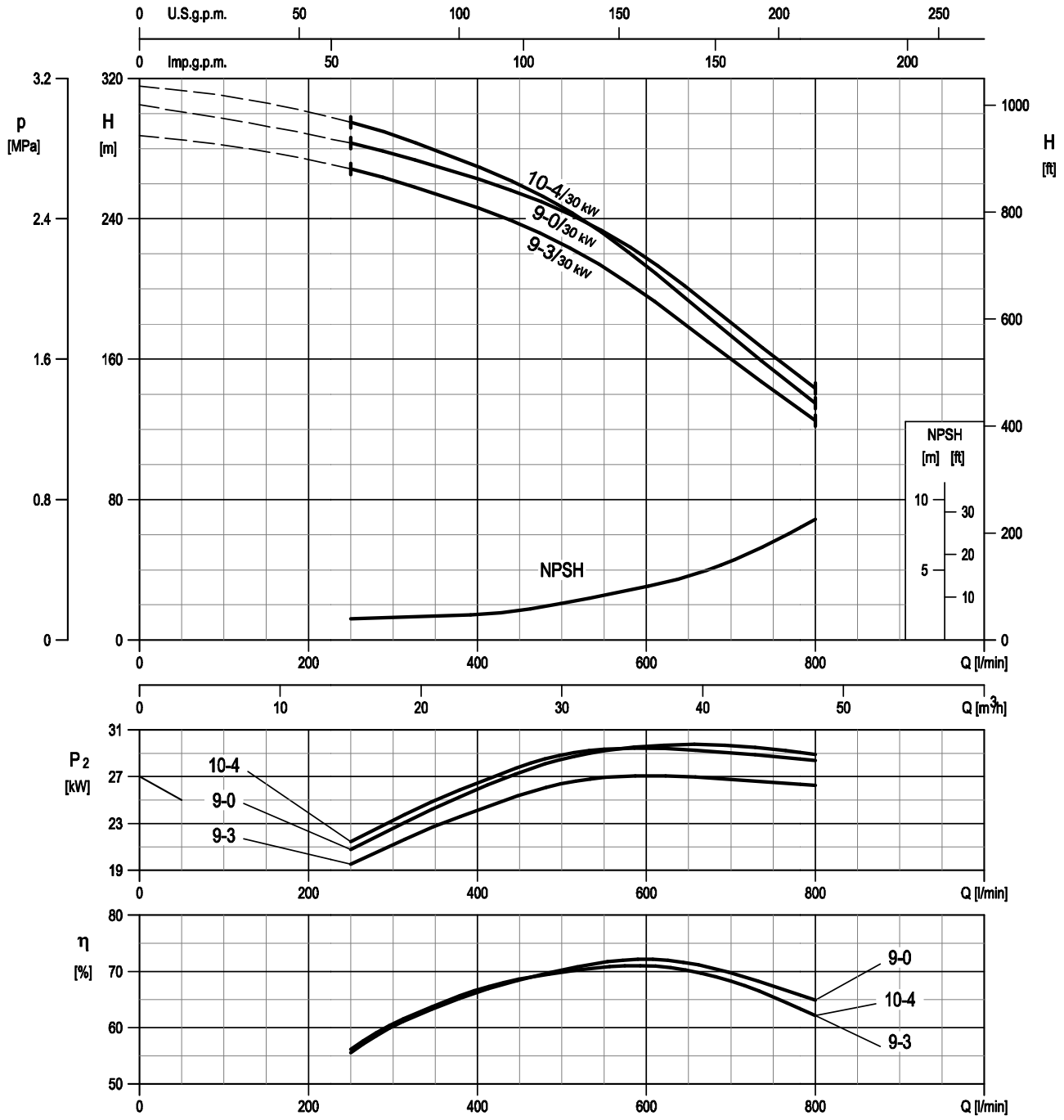

Rotation speed ≈3500 min-1
Test standard: ISO 9906:2012 - Grade 3B

EBARA Pumps Europe reserves the right to make changes without prior notice

TECHNICAL DATA
EVMG32

Dimensional sketch

Round flange (F) - DN65

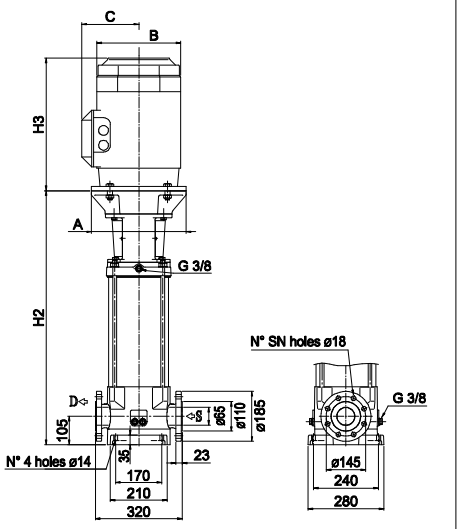

Dimensions [mm] and Weights [Kg]

Pump Type	Pmax [MPa]	Motor kW	Motor Size	A	3 ~ B	3 ~ C	3 ~ H3	Round flange (F) H2	SN	Weight Pump	Weight Pump + Motor
EVMG32 1-0F6/4.0	1.6	4.0	112 M	160	196	155	306	503	4	56	82.5
EVMG32 2-2F6/5.5	1.6	5.5	132 S	300	225	160	328	524	4	58	96.6
EVMG32 2-0F6/7.5	1.6	7.5	132 S	300	225	160	350	524	4	58	98.4
EVMG32 3-3F6/7.5	1.6	7.5	132 S	300	225	160	350	572	4	74	114.4
EVMG32 3-0F6/11	1.6	11	160 M	350	248	194	476	703	4	74	136.5
EVMG32 4-3F6/11	1.6	11	160 M	350	248	194	476	751	4	77	139.5
EVMG32 4-0F6/15	1.6	15	160 M	350	317	238	498	751	4	77	165.9
EVMG32 5-3F6/15	1.6	15	160 M	350	317	238	498	799	4	96	184.9
EVMG32 5-2F6/15	1.6	15	160 M	350	317	238	498	799	4	96	184.9
EVMG32 5-0F6/18.5	1.6	18.5	160 L	350	317	238	542	799	4	96	200
EVMG32 6-3F6/18.5	2.5	18.5	160 L	350	317	238	542	847	8	99	203
EVMG32 6-0F6/22	2.5	22	180 M	350	360	268	577	847	8	99	262
EVMG32 7-3F6/22	2.5	22	180 M	350	360	268	577	895	8	102	265
EVMG32 7-2F6/22	2.5	22	180 M	350	360	268	577	895	8	102	265
EVMG32 7-0F6/30	2.5	30	200 L	400	399	300	658	910	8	105	333
EVMG32 8-3F6/30	2.5	30	200 L	400	399	300	658	958	8	105	333
EVMG32 8-0F6/30	3.0	30	200 L	400	399	300	658	958	8	105	333
EVMG32 9-3F6/30	3.0	30	200 L	400	399	300	658	1006	8	108	336
EVMG32 9-0F6/30	3.0	30	200 L	400	399	300	658	1006	8	108	336
EVMG32 10-4F6/30	3.0	30	200 L	400	399	300	658	1054	8	108	336

1.6 MPa=16 bar ; 2.5 MPa=25 bar ; 3.0 MPa=30 bar

EBARA Pumps Europe reserves the right to make changes without prior notice

SECTIONAL VIEW
EVMG32

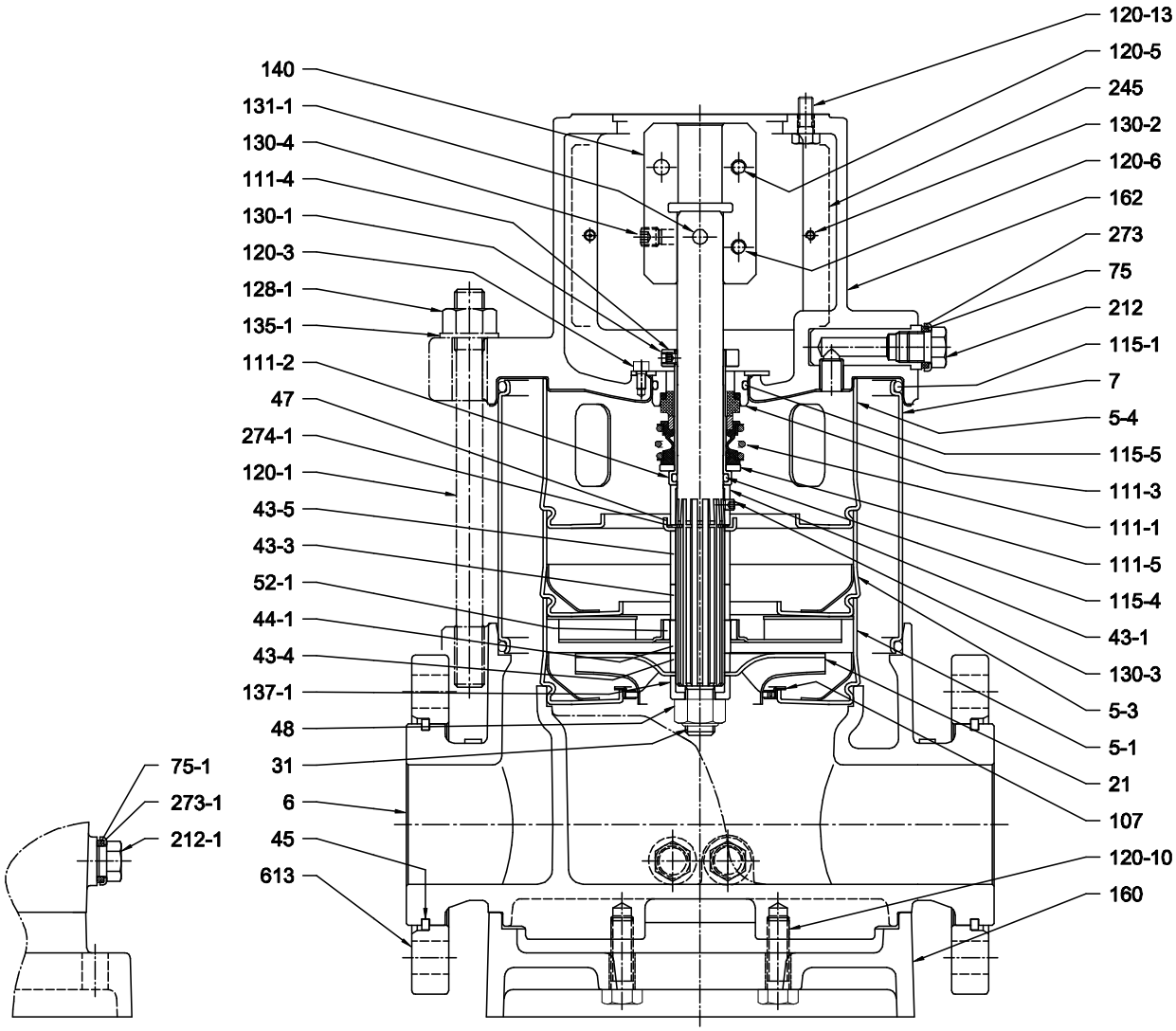

Pump without ball bearing

EBARA Pumps Europe reserves the right to make changes without prior notice

SECTIONAL VIEW
EVMG32

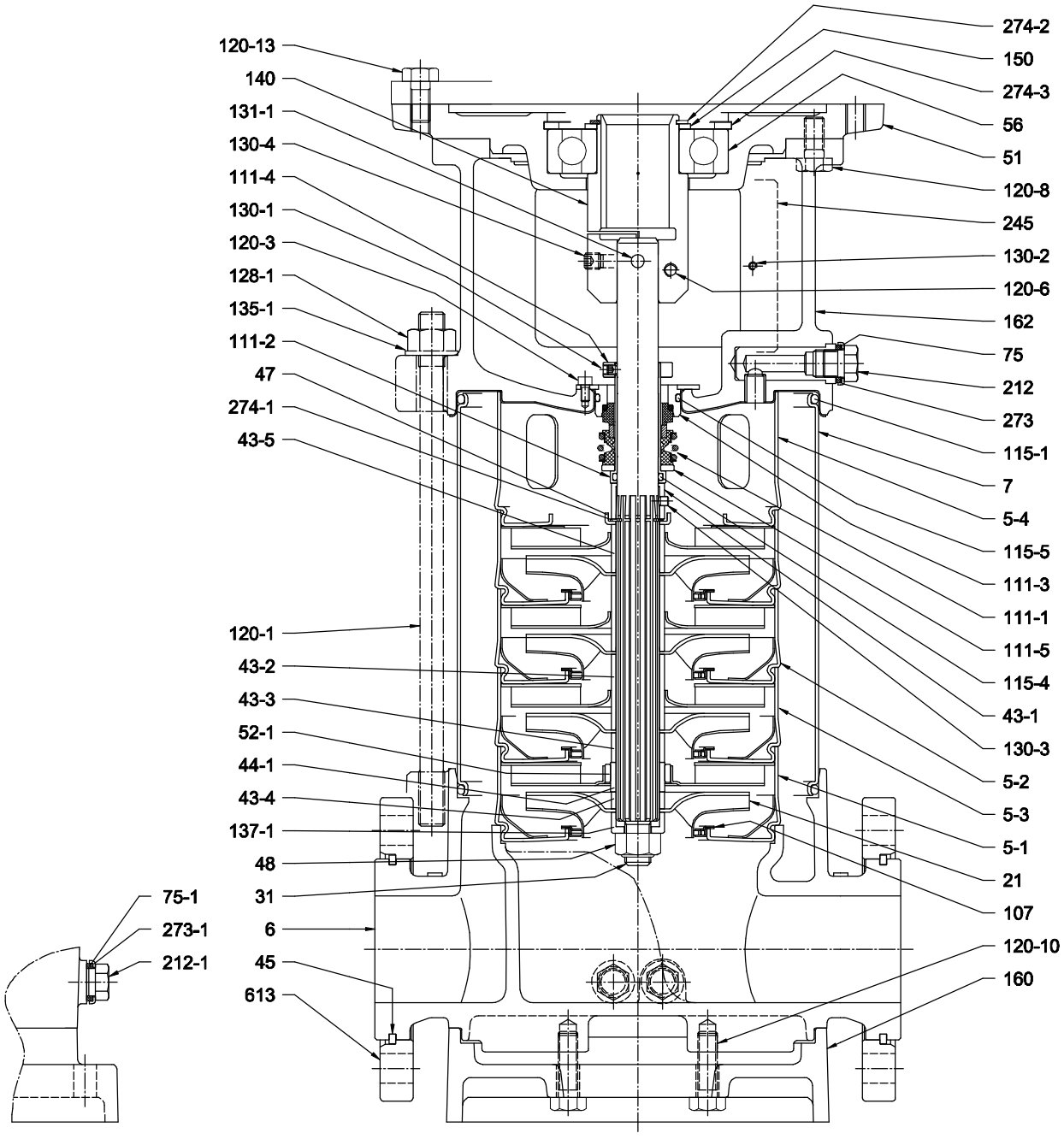

Pump with single ball bearing

EBARA
EBARA Pumps Europe
EBARA Pumps Europe reserves the right to make changes without prior notice

SECTIONAL VIEW
EVMG32

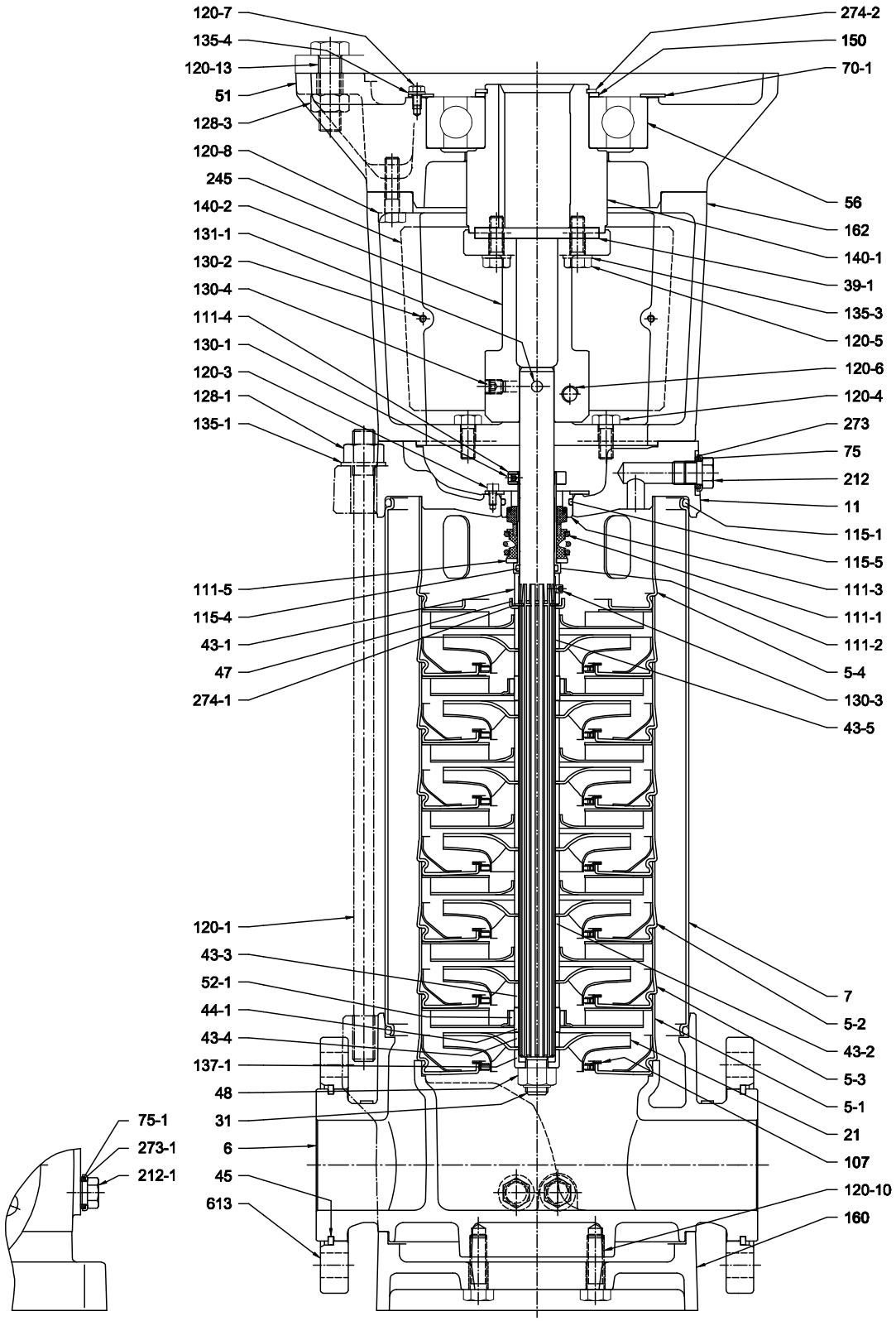

Pump with single ball bearing

EBARA Pumps Europe reserves the right to make changes without prior notice

SECTIONAL VIEW
EVMG32

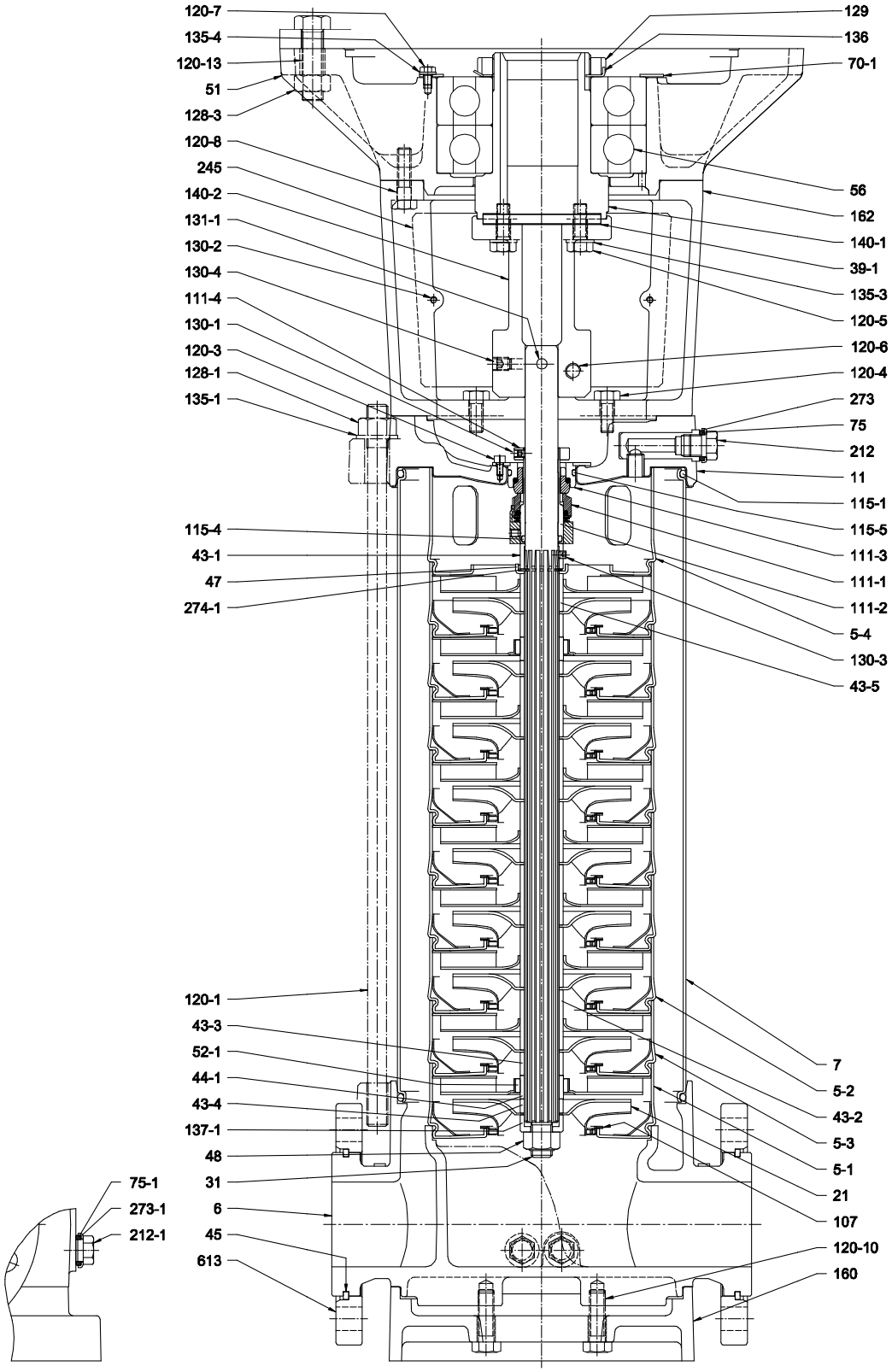

Pump with double ball bearing

EBARA Pumps Europe reserves the right to make changes without prior notice

SECTIONAL TABLE
EVMG32

N°	PART NAME	MATERIAL EVMG	DIMENSIONS	STANDARD
5-1	Suction casing	EN 1.4301 (AISI 304)		
5-2	Intermediate Casing	EN 1.4301 (AISI 304)		
5-3	Intermediate casing bearing	EN 1.4301 (AISI 304)		
5-4	Discharge casing	EN 1.4301 (AISI 304)		
6	Bottom casing	Cast Iron EN GJL-250-EN1561		
7	Outer casing	EN 1.4301 (AISI 304)		
11	Casing cover	Cast Iron EN GJL-250-EN1561		
21	Impeller	EN 1.4301 (AISI 304)		
21-1	Reduced impeller			
31	Shaft	EN 1.4401 (AISI 316)		
39-1	Key	Carbon Steel	12X8X90	UNI 6604
43-1	Shaft sleeve (mechanical seal)	EN 1.4301 (AISI 304)		
43-2	Shaft sleeve (intermediate)	EN 1.4301 (AISI 304)		
43-3	Shaft sleeve (bearing)	EN 1.4301 (AISI 304)		
43-4	Shaft sleeve (adjustment)	EN 1.4301 (AISI 304)		
43-5	Shaft sleeve (last stage)	EN 1.4301 (AISI 304)		
44-1	Shaft sleeve bearing	Tungsten carbide		
45	Flange holder	EN 1.402 (AISI 420)		
47	Ring Holder	EN 1.4301 (AISI 304)		
48	Impeller nut	A2-70 UNI 7323 with inox insert	M16	
51	Motor adapter	Cast iron EN-GJL-200-EN 1561		
52-1	Bearing	Tungsten carbide		
56	Ball bearing	see table page 337		
70-1	Ring for bearing	EN 1.4301 (AISI 304)		
75	O-Ring (plug)	EPDM		
75-1	O-Ring (plug)	EPDM		
107	Liner ring	PTFE / EN 1.4301 (AISI 304)		
111-1	Mechanical seal	Silicon carbide / Carbon / FPM		
111-2	Mechanical seal cartridge	EN 1.4301 (AISI 304)		
111-3	Mechanical seal seat	EN 1.4301 (AISI 304)		
111-4	Seal holder	Brass OT 58 UNI 5705		
111-5	Adjusting ring	EN 1.4301 (AISI 304)		
115-1	O-Ring (outer casing)	EPDM	D.208.91 X5.34	
115-4	O-Ring (cartridge sleeve)	EPDM	D. 24.99X3.53	
115-5	O-Ring (seal cover)	EPDM	D.44.04X3.53	
120-1	Tie-rod	Galvanized steel 6.8 strenght class ISO 898/1		

EBARA Pumps Europe reserves the right to make changes without prior notice

SECTIONAL TABLE
EVMG32

N°	PART NAME		MATERIAL EVMG	DIMENSIONS	STANDARD
120-3	Screw (mechanical seal)		A2-70 UNI 7323	M5X10	UNI 5731
120-4	Screw (casing cover)		Galvanized steel 8.8 strenght class ISO 898/1	M10X25	UNI 5793
120-5	Screw for coupling	EVM32 1	Galvanized steel 8.8 strenght class ISO 898/1	M8X20	UNI 5931
		EVM32 3 to 10		M10X30	UNI 5739
120-6	Screw for coupling	EVM32 1 to 3-3	Galvanized steel 8.8 strenght class ISO 898/1	M8X20	UNI 5931
		EVM32 3-0 to 10-3		M12X30	UNI 5931
120-7	Screw (bearing)		Galvanized steel 8.8 strenght class ISO 898/1	M6X10	UNI 5739
120-8	Screw (bearing housing)	EVM32 3-0 to 10-3	Galvanized steel 8.8 strenght class ISO 898/1	M10X30	UNI 5739
		EVM32 2-0 to 3-3		M12X25	UNI 5739
120-10	Screw (base plate)		Galvanized steel 8.8 strenght class ISO 898/1	M12X40	UNI 5739
120-13	Screw for motor	EVM32 1	Galvanized steel 8.8 strenght class ISO 898/1	M8X20	UNI 5739
		EVM32 2-0 to 3-3		M12X30	UNI 5739
		EVM32 3-0 to 10-3		M16X65	UNI 5739
128-1	Nut for tie rod		Galvanized steel	M 16	UNI 5588
128-3	Nut (motor)		Galvanized steel	M16	UNI 5588
129	Lock nut		Carbon Steel		
130-1	Set screw		A2-70 UNI 7323	M6X8	UNI 5923
130-2	Screw for coupling guard		A2-70 UNI 7323	M5X6	UNI 7687
130-3	Set screw (mechanical seal)		A2-70 UNI 7323	M6X6	UNI 5923
130-4	Set screw (coupling pin)		Carbon steel	M 10X10	UNI 5923
131-1	Pin for shaft		Carbon Steel		
135-1	Washer (Tie rod)		Galvanized steel	17X30X3	UNI 6592
135-3	Washer (coupling)		Galvanized steel	10.5X17.5X2.2	UNI 1751
135-4	Washer (bearing)		Carbon steel	6.5	UNI 1751
136	Locking washer (coupling)		Carbon steel		
137-1	Impeller spacer		EN 1.4301 (AISI 304)		
140	Coupling		Brass OT 58 UNI 5705		
140-1	Coupling (motor side)		Carbon steel		
140-2	Coupling (pump side)		Carbon steel		
150	Spacer		carbon steel		
160	Base		Cast iron EN-GJL-200-EN 1561		
162	Motor bracket		Cast iron EN-GJL-200-EN 1561		
212	Plug		EN 1.4301 (AISI 304)		
212-1	Plug		EN 1.4301 (AISI 304)		
245	Coupling guard		EN 1.4301 (AISI 304)		
273	Plug Washer		EN 1.4301 (AISI 304)		
273-1	Plug Washer		EN 1.4301 (AISI 304)		
274-1	C-type snap ring (mechanical seal)		EN 1.4301 (AISI 304)	Ø 26	UNI 7435
274-2	C-type snap ring (coupling)		Carbon Steel TC 80		
274-3	C-type snap ring (bracket)		Carbon Steel TC 80		
613	Flange		Carbon steel		

EBARA Pumps Europe reserves the right to make changes without prior notice

QUANTITY FOR MODEL EVMG32

Pump Type	N°																														
	5-2	5-3	11	21	21-1	39-1	43-2	43-3	43-4	44-1	51	52-1	56	70-1	107	111-5	120-4	120-5	120-7	120-8	128-3	129	135-3	135-4	136	140	140-1	140-2	150	274-2	274-3
EVMG32 1-0F6/4.0	/	1	/	1	/	/	/	1	1	1	/	1	/	/	1	1	/	2	/	/	/	/	/	/	/	1	/	/	/	/	/
EVMG32 2-2F6/5.5	/	1	/	/	2	/	/	1	1	1	1	1	1	/	2	1	/	/	/	4	/	/	/	/	/	1	/	/	1	1	1
EVMG32 2-0F6/7.5	/	1	/	2	/	/	/	1	1	1	1	1	1	/	2	1	/	/	/	4	/	/	/	/	/	1	/	/	1	1	1
EVMG32 3-3F6/7.5	1	1	/	/	3	/	1	1	1	1	1	1	1	/	3	1	/	/	/	4	/	/	/	/	/	1	/	/	1	1	1
EVMG32 3-0F6/11	1	1	1	3	/	1	1	1	1	1	1	1	1	1	3	1	4	4	3	4	4	/	4	3	/	/	1	1	1	1	/
EVMG32 4-3F6/11	2	1	1	1	3	1	2	1	1	1	1	1	1	1	4	1	4	4	3	4	4	/	4	3	/	/	1	1	1	1	/
EVMG32 4-0F6/15	2	1	1	4	/	1	2	1	1	1	1	1	1	1	4	1	4	4	3	4	4	/	4	3	/	/	1	1	1	1	/
EVMG32 5-3F6/15	3	1	1	2	3	1	3	1	1	1	1	1	1	1	5	1	4	4	3	4	4	/	4	3	/	/	1	1	1	1	/
EVMG32 5-2F6/15	3	1	1	3	2	1	3	1	1	1	1	1	1	1	5	1	4	4	3	4	4	/	4	3	/	/	1	1	1	1	/
EVMG32 5-0F6/18.5	3	1	1	5	/	1	3	1	1	1	1	1	1	1	5	1	4	4	3	4	4	/	4	3	/	/	1	1	1	1	/
EVMG32 6-3F6/18.5	4	1	1	3	3	1	4	1	1	1	1	1	1	1	6	1	4	4	3	4	4	/	4	3	/	/	1	1	1	1	/
EVMG32 6-0F6/22	4	1	1	5	1	1	4	1	1	1	1	1	1	1	6	1	4	4	3	4	4	/	4	3	/	/	1	1	1	1	/
EVMG32 7-3F6/22	5	1	1	4	3	1	5	1	1	1	1	1	1	1	7	1	4	4	3	4	4	/	4	3	/	/	1	1	1	1	/
EVMG32 7-2F6/22	5	1	1	5	2	1	5	1	1	1	1	1	1	1	7	1	4	4	3	4	4	/	4	3	/	/	1	1	1	1	/
EVMG32 7-0F6/30	5	1	1	7	/	1	5	1	1	1	1	1	1	1	7	1	4	4	3	4	4	1	4	3	1	/	1	1	/	/	/
EVMG32 8-3F6/30	6	1	1	5	3	1	6	1	1	1	1	1	1	1	8	1	4	4	3	4	4	1	4	3	1	/	1	1	/	/	/
EVMG32 8-0F6/30	6	1	1	8	/	1	6	1	1	1	1	1	1	1	8	/	4	4	3	4	4	1	4	3	1	/	1	1	/	/	/
EVMG32 9-3F6/30	7	1	1	6	3	1	7	1	1	1	1	1	1	1	9	/	4	4	3	4	4	1	4	3	1	/	1	1	/	/	/
EVMG32 9-0F6/30	7	1	1	9	/	1	7	1	1	1	1	1	1	1	9	/	4	4	3	4	4	1	4	3	1	/	1	1	/	/	/
EVMG32 10-4F6/30	7	2	1	6	4	1	7	2	2	2	1	2	1	1	10	/	4	4	3	4	4	1	4	3	1	/	1	1	/	/	/

BEARINGS EVMG32

Pump Type	N° 56
EVMG32 1-0F6/4.0	/
EVMG32 2-2F6/5.5	6310 ZZ C3
EVMG32 2-0F6/7.5	6310 ZZ C3
EVMG32 3-3F6/7.5	6310 ZZ C3
EVMG32 3-0F6/11	6313 ZZ C3
EVMG32 4-3F6/11	6313 ZZ C3
EVMG32 4-0F6/15	6313 ZZ C3
EVMG32 5-3F6/15	6313 ZZ C3
EVMG32 5-2F6/15	6313 ZZ C3
EVMG32 5-0F6/18.5	6313 ZZ C3
EVMG32 6-3F6/18.5	6313 ZZ C3
EVMG32 6-0F6/22	6315 ZZ C3
EVMG32 7-3F6/22	6315 ZZ C3
EVMG32 7-2F6/22	6315 ZZ C3
EVMG32 7-0F6/30	6315 ZZDT C3*
EVMG32 8-3F6/30	6315 ZZDT C3*
EVMG32 8-0F6/30	6315 ZZDT C3*
EVMG32 9-3F6/30	6315 ZZDT C3*
EVMG32 9-0F6/30	6315 ZZDT C3*
EVMG32 10-4F6/30	6315 ZZDT C3*

*DT=Two single row deep groove ball bearings matched for paired mounting in a tandem arrangement.

EBARA Pumps Europe reserves the right to make changes without prior notice

PERFORMANCE CURVE
EVM(L)45

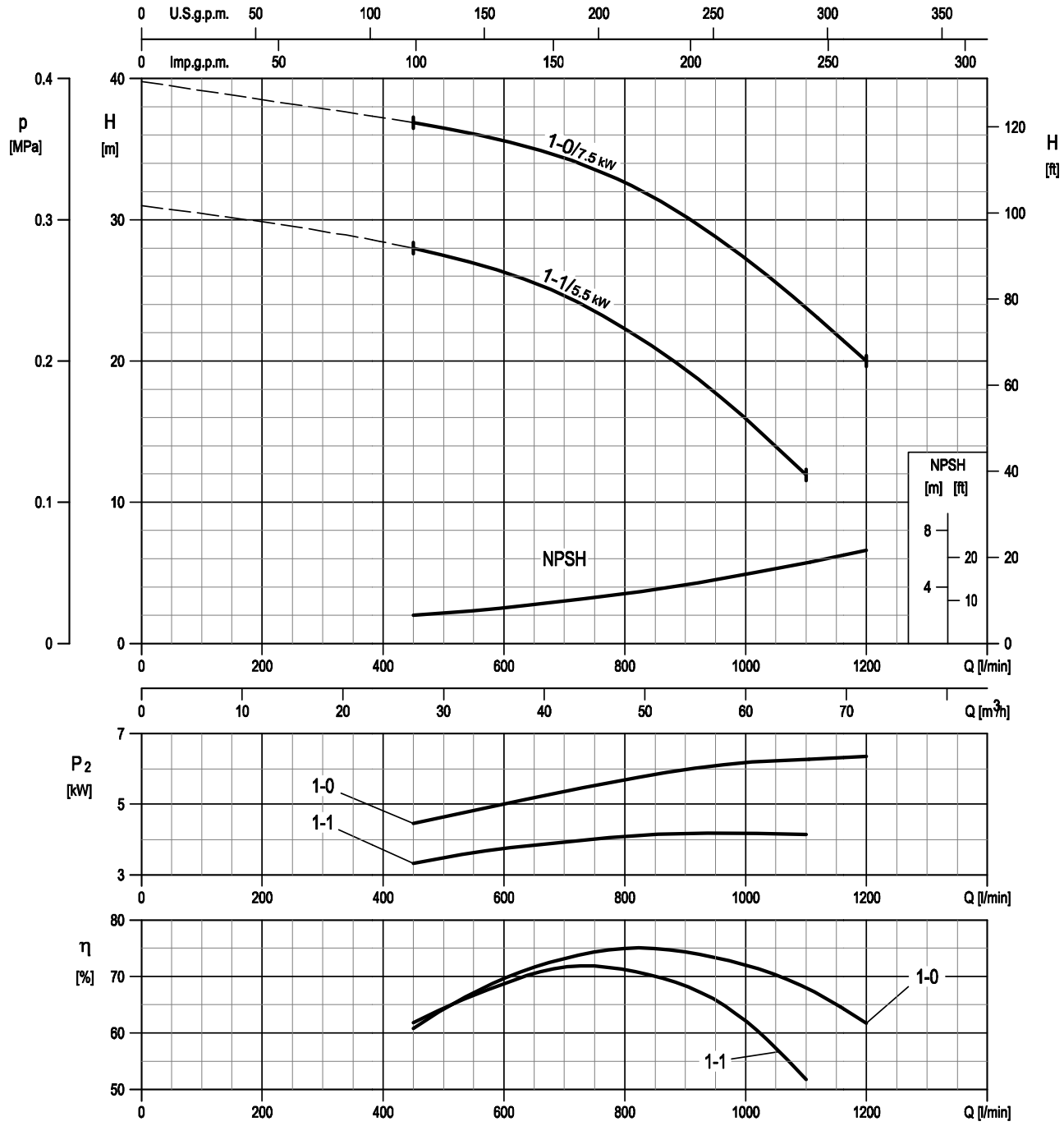

Rotation speed ≈3500 min-1
Test standard: ISO 9906:2012 - Grade 3B

EBARA Pumps Europe
EBARA Pumps Europe reserves the right to make changes without prior notice

VERTICAL MULTISTAGE PUMPS

EVM

PERFORMANCE CURVE
EVM(L)45

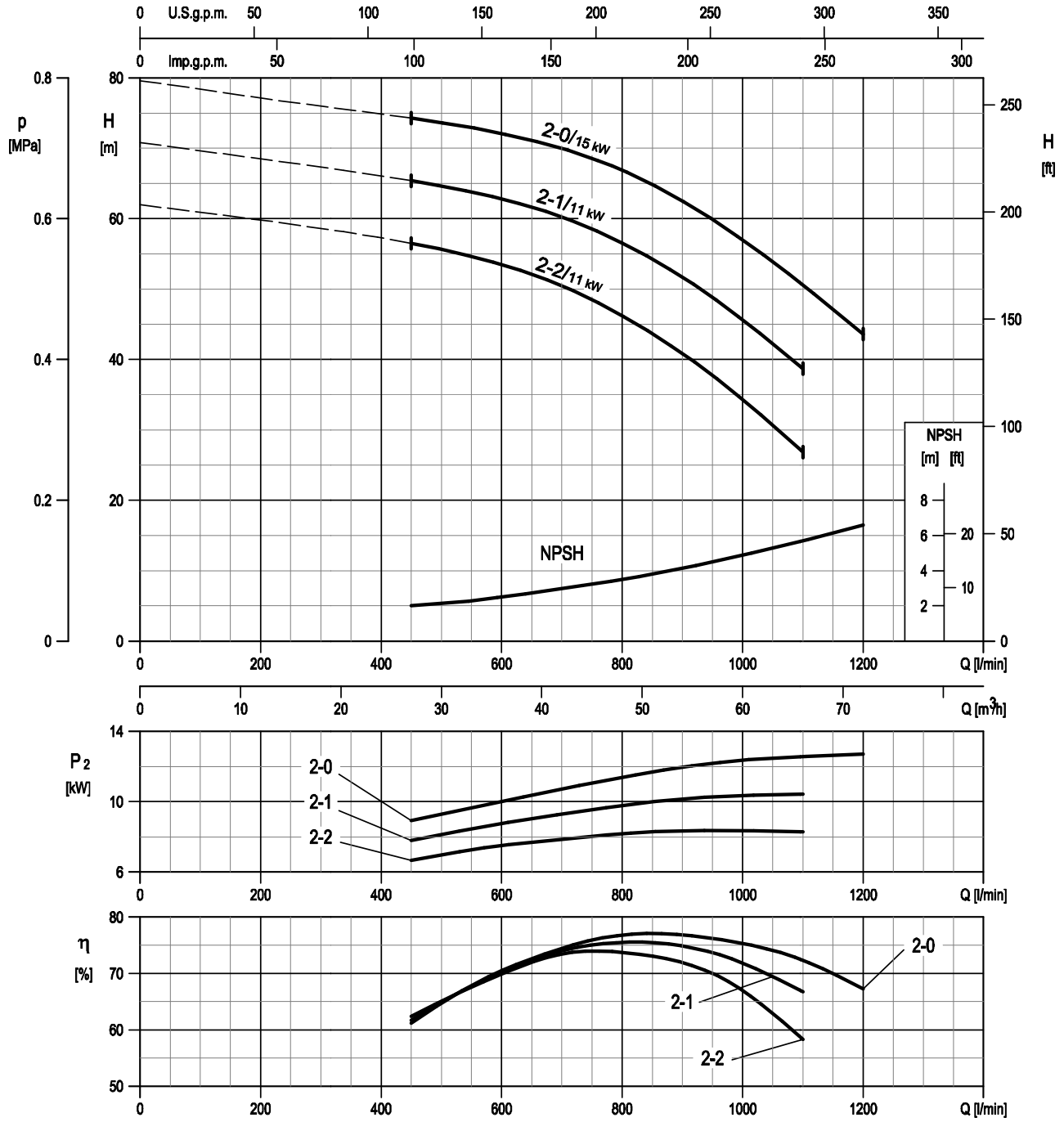

Rotation speed ≈3500 min-1
Test standard: ISO 9906:2012 - Grade 3B

EBARA Pumps Europe reserves the right to make changes without prior notice

PERFORMANCE CURVE
EVM(L)45

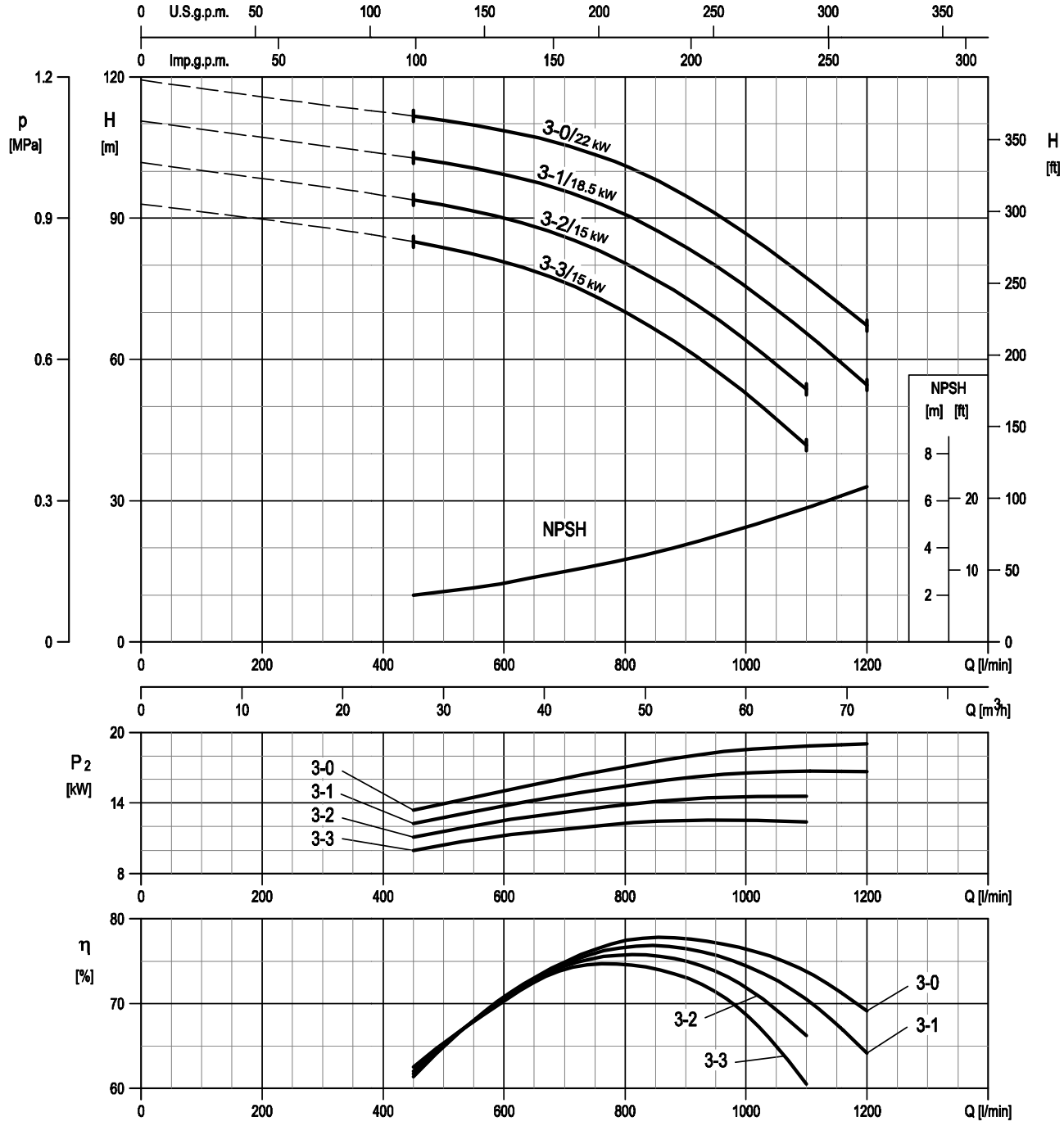

Rotation speed ≈3500 min-1
Test standard: ISO 9906:2012 - Grade 3B

EBARA Pumps Europe reserves the right to make changes without prior notice

PERFORMANCE CURVE
EVM(L)45

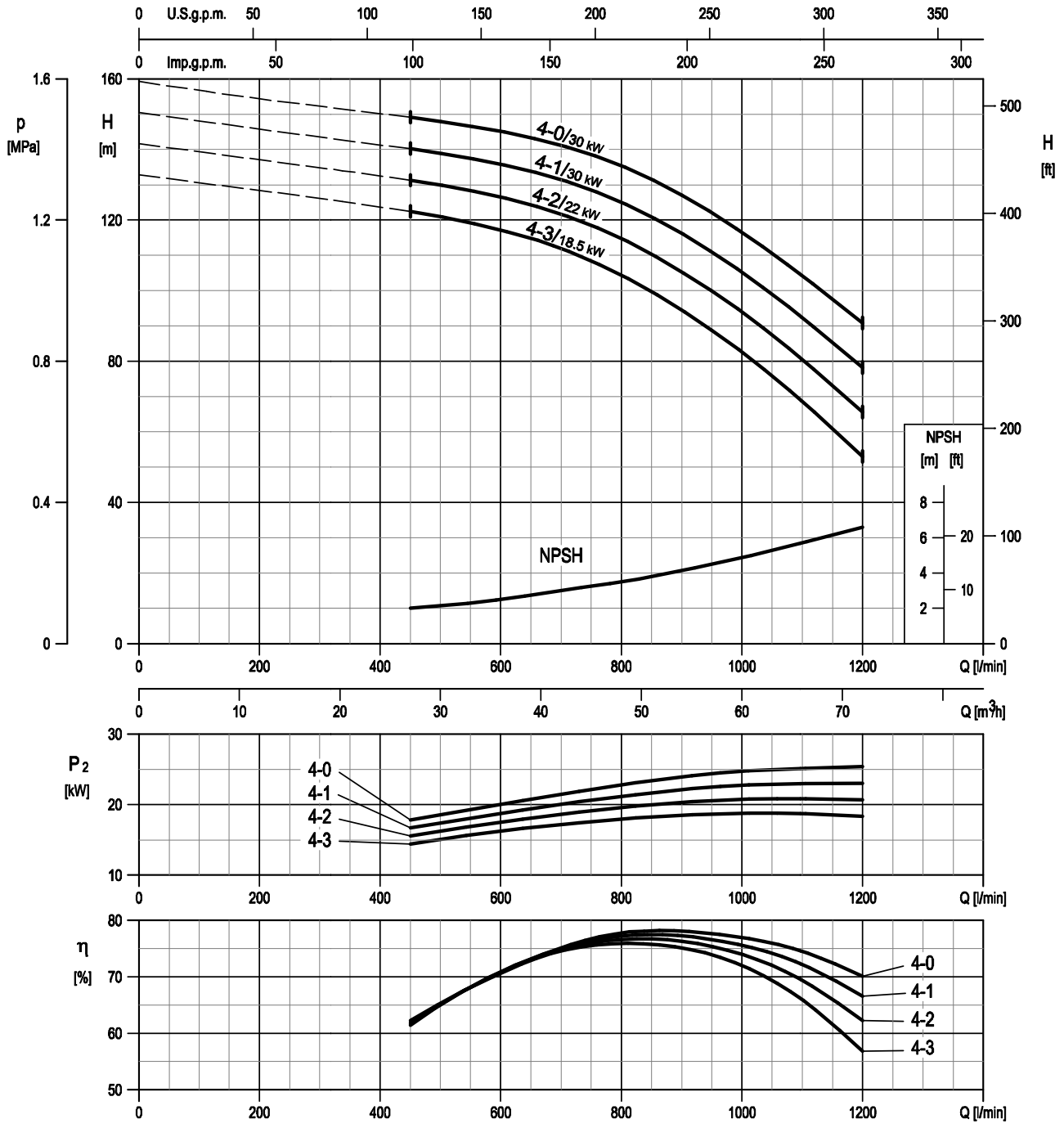

Rotation speed ≈3500 min-1
Test standard: ISO 9906:2012 - Grade 3B

EBARA Pumps Europe reserves the right to make changes without prior notice

PERFORMANCE CURVE
EVM(L)45

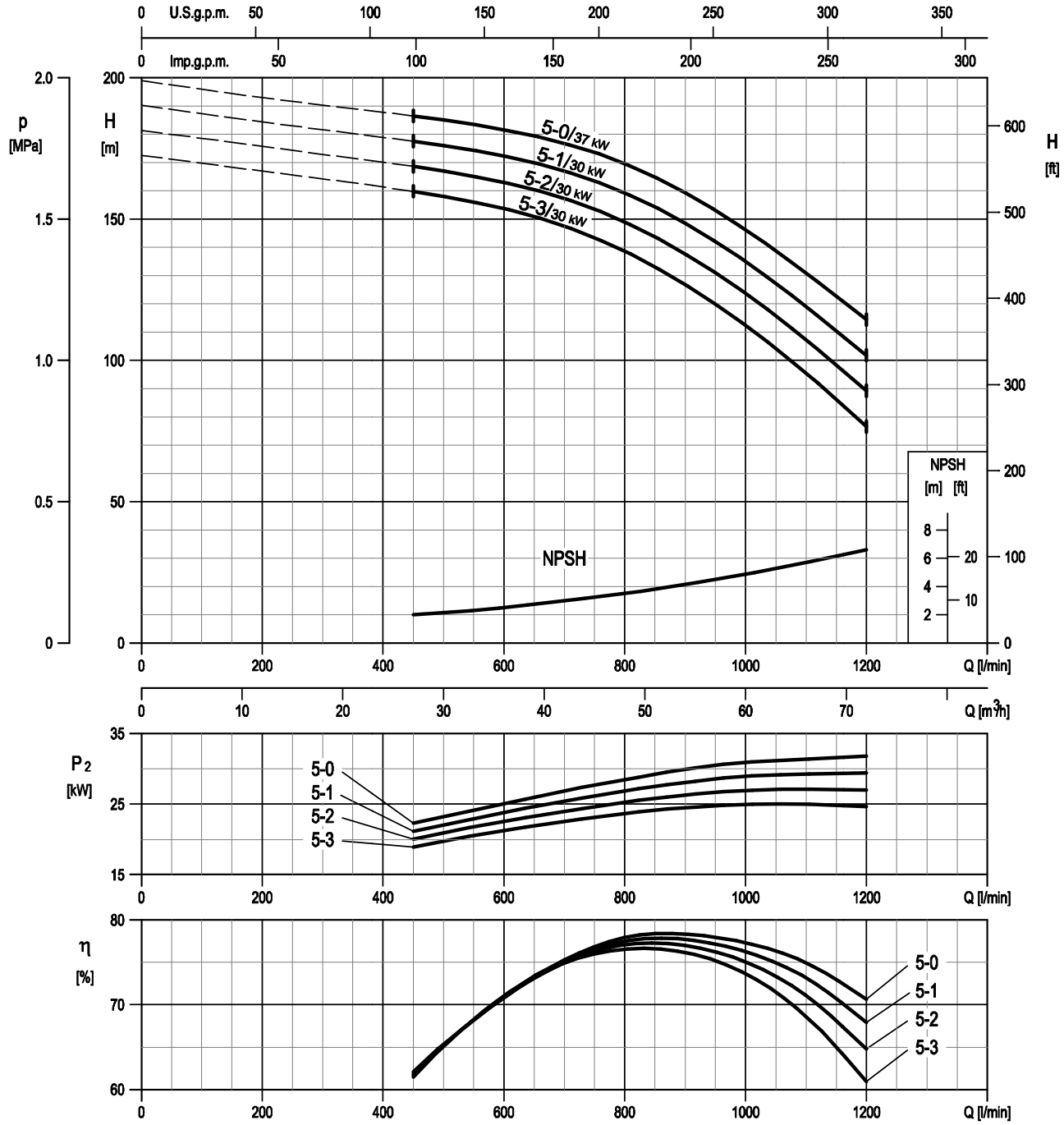

Rotation speed ≈3500 min-1
Test standard: ISO 9906:2012 - Grade 3B

EBARA Pumps Europe
EBARA Pumps Europe reserves the right to make changes without prior notice

VERTICAL MULTISTAGE PUMPS EVM

PERFORMANCE CURVE
EVM(L)45

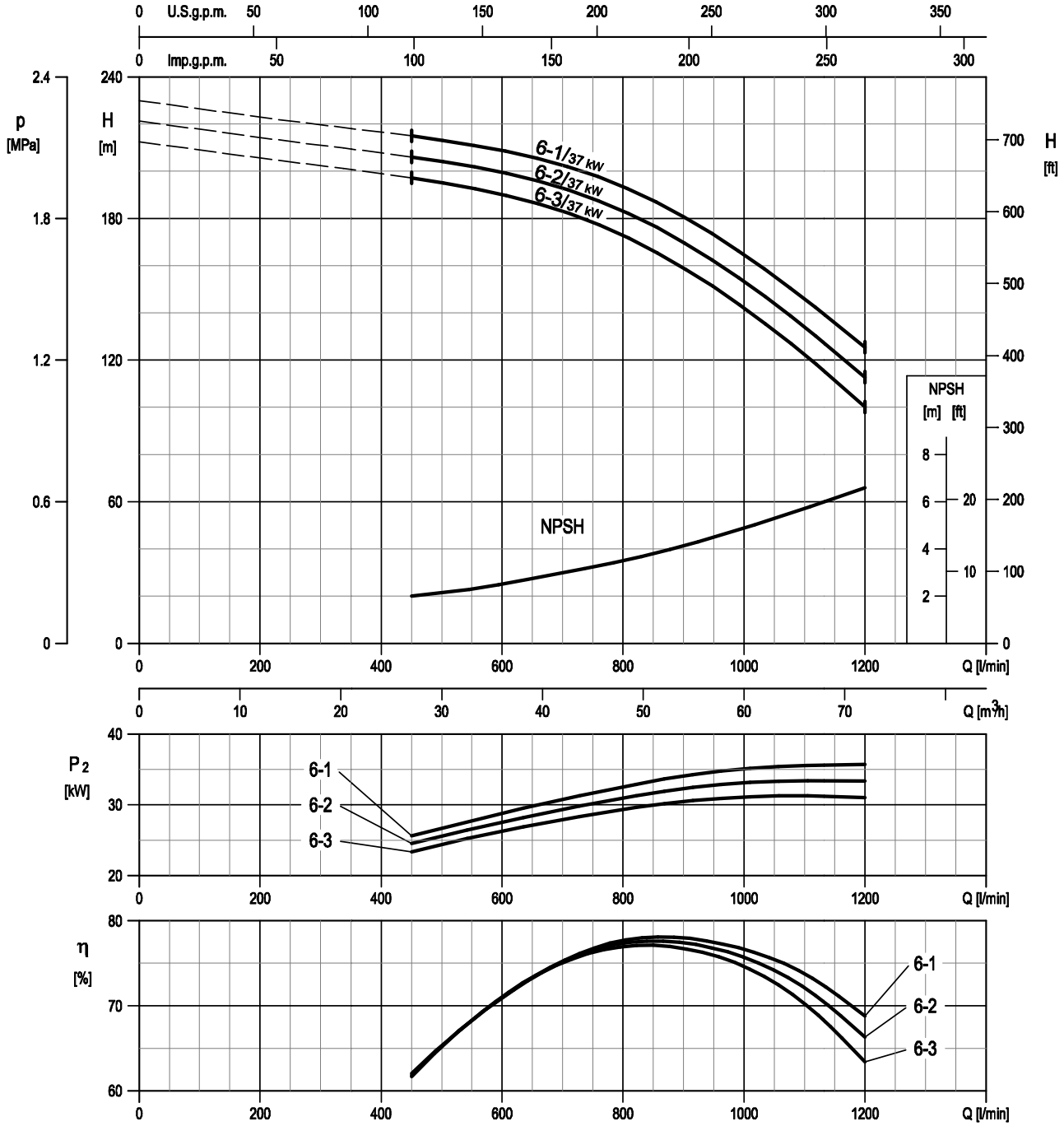

Rotation speed ≈3500 min-1
Test standard: ISO 9906:2012 - Grade 3B

EBARA Pumps Europe reserves the right to make changes without prior notice

TECHNICAL DATA
EVM(L)45

Dimensional sketch

Round flange (F) - DN80

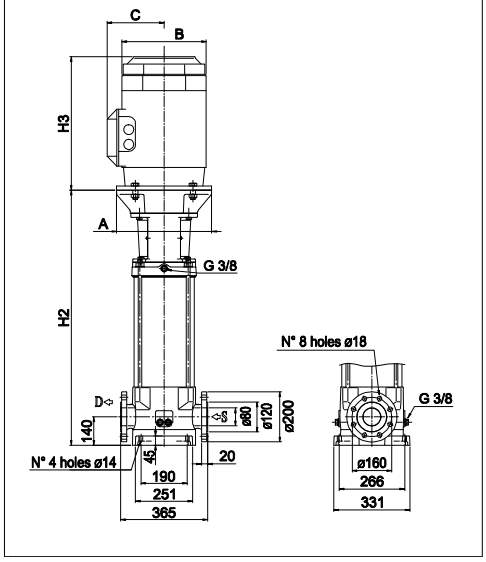

Dimensions [mm] and Weights [Kg]

Pump Type	Pmax [MPa]	Motor kW	Size	A	3 ~ B	C	H3	Round flange (F) H2	Weight Pump	Weight Pump + Motor
EVM(L)45 1-1F6/5.5	1.6	5.5	132 S	300	225	160	328	546	56	94.6
EVM(L)45 1-0F6/7.5	1.6	7.5	132 S	300	225	160	350	546	56	96.4
EVM(L)45 2-2F6/11	1.6	11	160 M	350	248	194	476	749	58	120.5
EVM(L)45 2-1F6/11	1.6	11	160 M	350	248	194	476	749	58	120.5
EVM(L)45 2-0F6/15	1.6	15	160 M	350	317	238	498	749	58	146.9
EVM(L)45 3-3F6/15	1.6	15	160 M	350	317	238	498	822	74	162.9
EVM(L)45 3-2F6/15	1.6	15	160 M	350	317	238	498	822	74	162.9
EVM(L)45 3-1F6/18.5	1.6	18.5	160 L	350	317	238	542	822	74	178
EVM(L)45 3-0F6/22	1.6	22	180 M	350	360	268	577	822	74	237
EVM(L)45 4-3F6/18.5	1.6	18.5	160 L	350	317	238	542	894	77	181
EVM(L)45 4-2F6/22	1.6	22	180 M	350	360	268	577	894	77	240
EVM(L)45 4-1F6/30	1.6	30	200 L	400	399	300	658	909	77	305
EVM(L)45 4-0F6/30	1.6	30	200 L	400	399	300	658	909	77	305
EVM(L)45 5-3F6/30	2.5	30	200 L	400	399	300	658	981	96	324
EVM(L)45 5-2F6/30	2.5	30	200 L	400	399	300	658	981	96	324
EVM(L)45 5-1F6/30	2.5	30	200 L	400	399	300	658	981	96	324
EVM(L)45 5-0F6/37	2.5	37	200 L	400	399	300	658	981	96	338
EVM(L)45 6-3F6/37	2.5	37	200 L	400	399	300	658	1053	99	341
EVM(L)45 6-2F6/37	2.5	37	200 L	400	399	300	658	1053	99	341
EVM(L)45 6-1F6/37	2.5	37	200 L	400	399	300	658	1053	99	341

1.6 MPa=16 bar ; 2.5 MPa=25 bar ; 3.0 MPa=30 bar

EBARA Pumps Europe reserves the right to make changes without prior notice

SECTIONAL VIEW
EVM(L)45

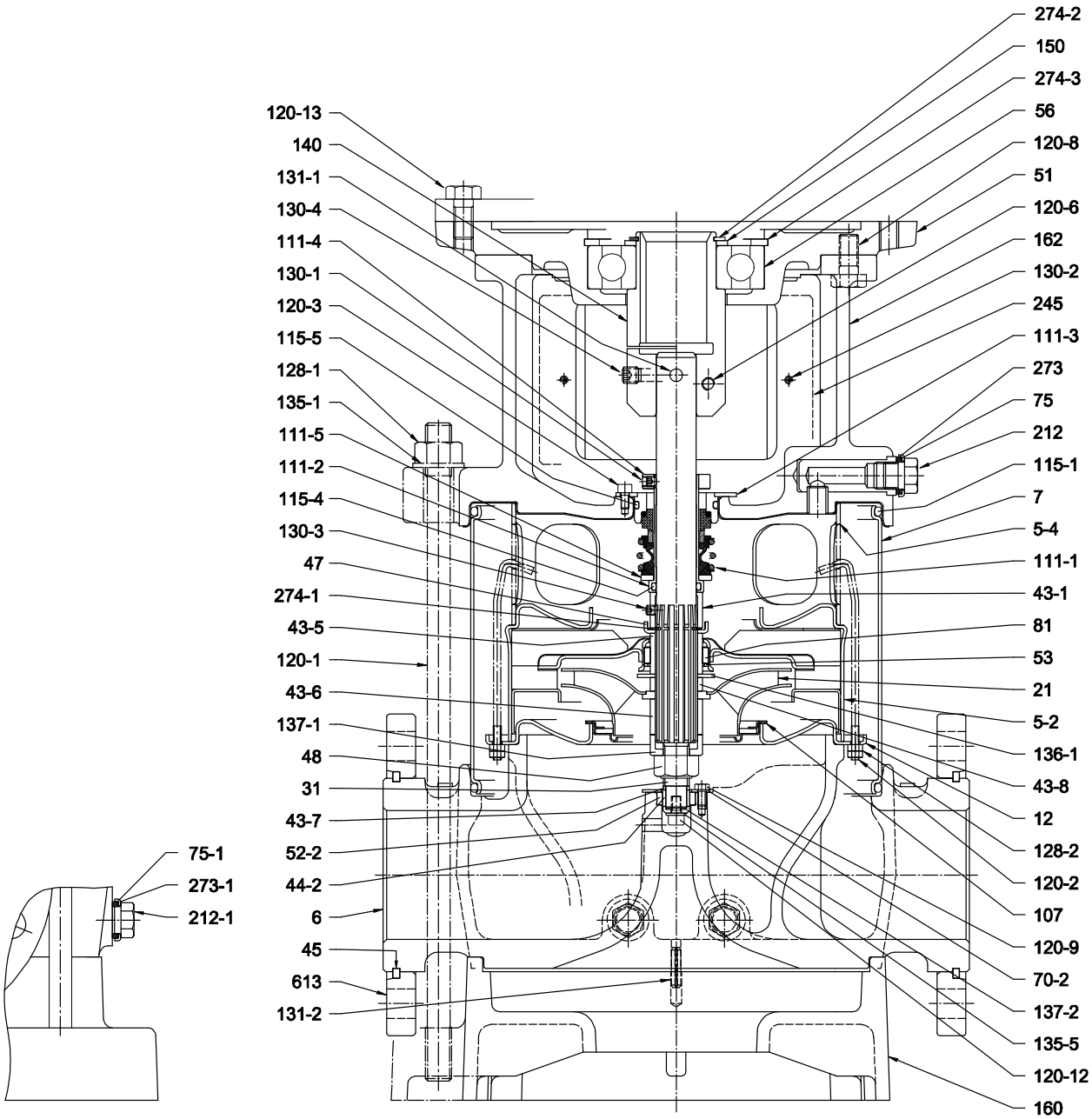

Pump with single ball bearing

EBARA Pumps Europe

EBARA Pumps Europe reserves the right to make changes without prior notice

SECTIONAL VIEW
EVM(L)45

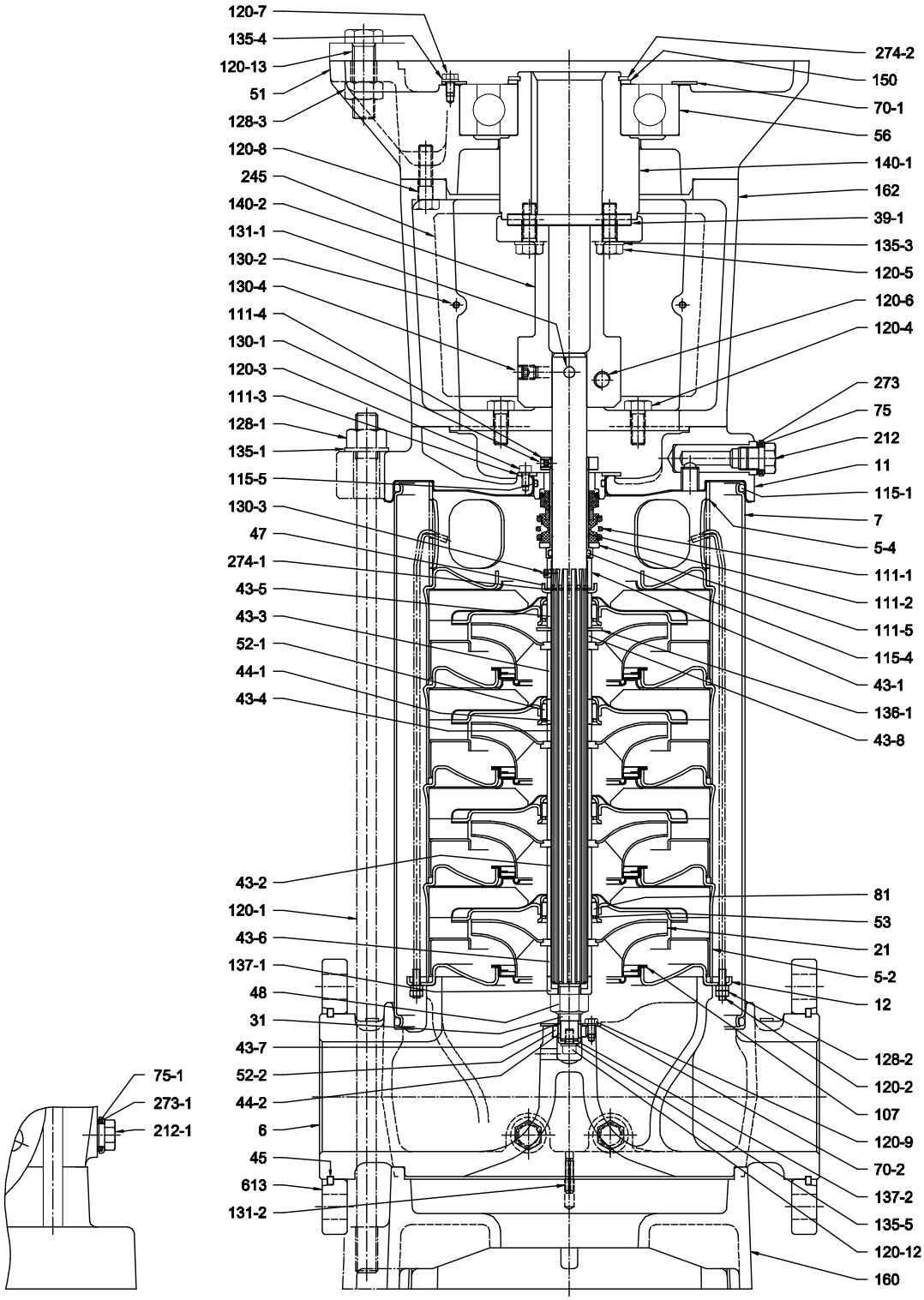

Pump with single ball bearing

EBARA
EBARA Pumps Europe
EBARA Pumps Europe reserves the right to make changes without prior notice

SECTIONAL VIEW
EVM(L)45

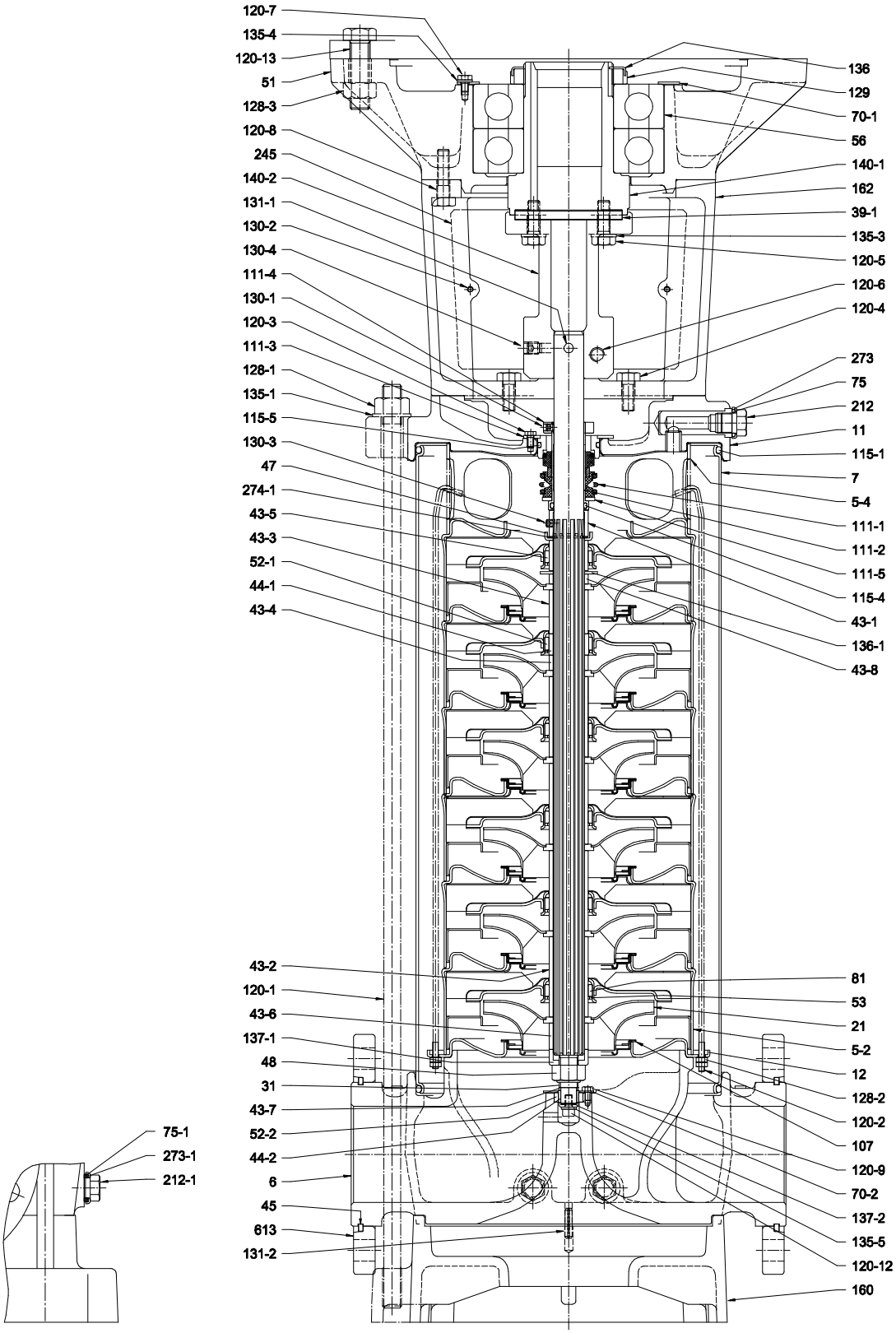

Pump with double ball bearing

EBARA Pumps Europe

EBARA Pumps Europe reserves the right to make changes without prior notice

SECTIONAL TABLE
EVM(L)45

N°	PART NAME		MATERIAL EVM	MATERIAL EVML	DIMENSIONS	STANDARD
5-2	Intermediate casing		EN 1.4301 (AISI 304)	EN 1.4401 (AISI 316)		
5-4	Discharge casing		EN 1.4301 (AISI 304)	EN 1.4401 (AISI 316)		
6	Bottom casing		EN. 1.4308 (ASTM CF8)	EN. 1.4408 (ASTM CF8M)		
7	Outer casing		EN 1.4301 (AISI 304)	EN 1.4401 (AISI 316)		
11	Casing cover		Cast iron + EN 1.4301 (AISI 304)	Cast iron + EN 1.4401 (AISI 316)		
12	Suction cover		EN. 1.1301 (AISI304)	EN 1.4401 (AISI 316)		
21	Impeller		EN 1.4301 (AISI 304)	EN 1.4401 (AISI 316)		
21-1	Reduced impeller					
31	Shaft		EN 1.4401 (AISI 316)			
39-1	Key		Carbon steel		12X8X90	UNI 6604
43-1	Shaft sleeve (mechanical seal)		EN 1.4301 (AISI 304)	EN 1.4401 (AISI 316)		
43-2	Shaft sleeve (intermediate)		EN 1.4301 (AISI 304)	EN 1.4401 (AISI 316)		
43-3	Shaft sleeve (bearing)		EN 1.4301 (AISI 304)	EN 1.4401 (AISI 316)		
43-4	Shaft sleeve (adjustment)		EN 1.4301 (AISI 304)	EN 1.4401 (AISI 316)		
43-5	Shaft sleeve (last stage)		EN 1.4301 (AISI 304)	EN 1.4401 (AISI 316)		
43-6	Shaft sleeve (adjustment)		EN 1.4301 (AISI 304)	EN 1.4401 (AISI 316)		
43-7	Shaft sleeve		EN 1.4301 (AISI 304)	EN 1.4401 (AISI 316)		
43-8	Shaft sleeve (discharge-lower)		EN 1.4301 (AISI 304)	EN 1.4401 (AISI 316)		
44-1	Shaft sleeve bearing		Tungsten carbide			
44-2	Bearing sleeve (bottom bearing)		Tungsten carbide			
45	Flange holder		EN 1.402 (AISI 420)			
47	Ring holder		EN 1.4301 (AISI 304)	EN 1.4401 (AISI 316)		
48	Impeller nut		A2-70 UNI 7323 with inox insert	A4-70 UNI 7323 with inox insert	M16	
51	Motor adapter		Cast iron EN-GJL-200-EN 1561			
52-1	Bearing		Tungsten carbide			
52-2	Bearing		Tungsten carbide			
53	Bush holder		EN 1.4301 (AISI 304)	EN 1.4401 (AISI 316)		
56	Ball bearing		see table page 349			
70-1	Ring for bearing		EN 1.4301 (AISI 304)			
70-2	Ring for bearing		EN 1.4301 (AISI 304)	EN 1.4401 (AISI 316)		
75	O-Ring (plug)		EPDM	FPM		
75-1	O-Ring (plug)		EPDM	FPM		
81	Bush		PTFE			
107	Liner ring		PTFE /EN 1.4401 (AISI316)			
111-1	Mechanical seal		Silicon carbide/Carbon/FPM			
111-2	Mechanical seal cartridge		EN 1.4301 (AISI 304)	EN 1.4401 (AISI 316)		
111-3	Mechanical seal seat		EN 1.4301 (AISI 304)	EN 1.4401 (AISI 316)		
111-4	Seal holder		Brass OT 58 UNI 5705	EN 1.4401 (AISI 316)		
111-5	Adjusting ring		EN 1.4301 (AISI 304)	EN 1.4401 (AISI 316)		
115-1	O-Ring (outer casing)		EPDM	FPM	D.240.66X5.34	
115-4	O-Ring (cartridege sleeve)		EPDM	FPM	D.24.99X3.53	
115-5	O-Ring (seal cover)		EPDM	FPM	D.44.04X3.53	
120-1	Tie Rod		Galvanized steel 6.8 strenght class ISO 898/1			
120-2	Tie Rod		EN 1.4301 (AISI 304)	EN 1.4401 (AISI 316)		
120-3	Screw		A2-70 UNI 7323		M5X10	UNI 5931
120-4	Screw		Galvanized steel 8.8 strenght class ISO 898/1		M10X25	UNI 5739
120-5	Screw for coupling		Galvanized steel 8.8 strenght class ISO 898/1		M10X30	UNI 5739
120-6	Screw for coupling	EVM 45 1	Galvanized steel 8.8 strenght class ISO 898/1		M8X20	UNI 5931
		EVM 45 2 to 6			M12X30	UNI 5931
120-7	Screw		Galvanized steel 8.8 strenght class ISO 898/1		M6X10	UNI 5739
120-8	Screw	EVM 45 1	Galvanized steel 8.8 strenght class ISO 898/1		M12X25	UNI 5739
		EVM 45 2 to 6			M10X30	UNI 5739
120-9	Screw	EVML	EN 1.4301 (AISI 304)	EN 1.4401 (AISI 316)	M5X8	UNI 5737
		EVM, EVMG				UNI 5739
120-12	Screw		EN 1.4301 (AISI 304)	EN 1.4401 (AISI 316)	M6X20	UNI 5931
120-13	Screw for motor	EVM45 1-0, 1-1	Galvanized steel 8.8 strenght class ISO 898/1		M12X30	UNI 5739
		EVM45 6			M16X55	UNI 5737
		EVM45 2 to 5-3			M16X65	UNI 5739
128-1	Nut for tie rod		Galvanized steel		M16	UNI 5588
128-2	Nut		Carbon steel	EN 1.4401 (AISI 316)	M5	UNI 5588
128-3	Nut		Galvanized steel		M16	UNI 5588
129	Lock nut		Carbon steel		M75X2	
130-1	Set screw		A2- 70 UNI 7323		M6X8	UNI 5923
130-2	Screw for coupling guard		A2-70 UNI 7323		M5X6	UNI 7687
130-3	Set screw		A2- 70 UNI 7323		M6X6	UNI 5923
130-4	Set screw		Carbon steel		M10X10	UNI 5923
131-1	Pin for shaft		Carbon steel			
131-2	Elastic pin		Galvanized steel		6X25	UNI 6873
135-1	Washer		Galvanized steel		17X30X3	UNI 6592
135-3	Washer		Galvanized steel		10.5X17.5X2.2	UNI 1751
135-4	Washer		Plated carbon steel		6.4	UNI 1751
135-5	Washer		EN 1.4301 (AISI 304)	EN 1.4401 (AISI 316)		
136	Bearing washer		Carbon steel			
136-1	Stopper ring		EN 1.4301 (AISI 304)	EN 1.4401 (AISI 316)		
137-1	Impeller spacer		EN 1.4301 (AISI 304)	EN 1.4401 (AISI 316)		
137-2	Shaft spacer		EN 1.4301 (AISI 304)	EN 1.4401 (AISI 316)		
140	Coupling		Brass OT 58 UNI 5705			
140-1	Motor coupling		Carbon steel			
140-2	Coupling (pump side)		Carbon steel			
150	Spacer		Carbon steel			
160	Base		Cast iron EN-GJL-200 EN1561			
162	Mator bracket		Cast iron EN-GJL-200 EN1561			
212	Plug		EN 1.4301 (AISI 304)	EN 1.4401 (AISI 316)		
212-1	Plug		EN 1.4301 (AISI 304)	EN 1.4401 (AISI 316)		
245	Coupling guard		EN 1.4301 (AISI 304)			
273	Plug washer		EN 1.4301 (AISI 304)	EN 1.4401 (AISI 316)		
273-1	Plug washer		EN 1.4301 (AISI 304)	EN 1.4401 (AISI 316)		
274-1	C-type snap ring		EN 1.4301 (AISI 304)	EN 1.4401 (AISI 316)	D.26	UNI 7435
274-2	C-Typr snap ring	EVM45 1-0, 1-1	Carbon steel TC80		D.50	UNI 7435
		EVM45 2 to 4-3			D.65	UNI 7435
		EVM45 4-2			D.75	UNI 7535
274-3	C-Typr snap ring		Carbon steel TC80		D.110	UNI 7437
613	Flange		Carbon steel			

EBARA
EBARA Pumps Europe
EBARA Pumps Europe reserves the right to make changes without prior notice

QUANTITY FOR MODEL EVM(L)45

Pump Type	N°																													
	5-2	11	21	21-1	39-1	43-2	43-3	43-4	44-1	52-1	53	56	70-1	81	107	120-4	120-5	120-7	128-3	129	135-3	135-4	136	140	140-1	140-2	150	274-2	274-3
EVM(L)45 1-1F6/5.5	1	/	/	1	/	/	/	/	/	/	1	1	/	1	1	/	/	/	/	/	/	/	/	1	/	/	1	1	1
EVM(L)45 1-0F6/7.5	1	/	1	/	/	/	/	/	/	/	1	1	/	1	1	/	/	/	/	/	/	/	/	1	/	/	1	1	1
EVM(L)45 2-2F6/11	2	1	/	2	1	1	/	/	/	/	2	1	1	2	2	4	4	3	4	/	4	3	/	/	1	1	1	1	/
EVM(L)45 2-1F6/11	2	1	1	1	1	1	/	/	/	/	2	1	1	2	2	4	4	3	4	/	4	3	/	/	1	1	1	1	/
EVM(L)45 2-0F6/15	2	1	2	/	1	1	/	/	/	/	2	1	1	2	2	4	4	3	4	/	4	3	/	/	1	1	1	1	/
EVM(L)45 3-3F6/15	3	1	/	3	1	2	/	/	/	/	3	1	1	3	3	4	4	3	4	/	4	3	/	/	1	1	1	1	/
EVM(L)45 3-2F6/15	3	1	1	2	1	2	/	/	/	/	3	1	1	3	3	4	4	3	4	/	4	3	/	/	1	1	1	1	/
EVM(L)45 3-1F6/18.5	3	1	2	1	1	2	/	/	/	/	3	1	1	3	3	4	4	3	4	/	4	3	/	/	1	1	1	1	/
EVM(L)45 3-0F6/22	3	1	3	/	1	2	/	/	/	/	3	1	1	3	3	4	4	3	4	/	4	3	/	/	1	1	1	1	/
EVM(L)45 4-3F6/18.5	4	1	1	3	1	2	1	1	1	1	4	1	1	3	4	4	4	3	4	/	4	3	/	/	1	1	1	1	/
EVM(L)45 4-2F6/22	4	1	2	2	1	2	1	1	1	1	4	1	1	3	4	4	4	3	4	/	4	3	/	/	1	1	1	1	/
EVM(L)45 4-1F6/30	4	1	3	1	1	2	1	1	1	1	4	1	1	3	4	4	4	3	4	1	4	3	1	/	1	1	/	/	/
EVM(L)45 4-0F6/30	4	1	4	/	1	2	1	1	1	1	4	1	1	3	4	4	4	3	4	1	4	3	1	/	1	1	/	/	/
EVM(L)45 5-3F6/30	5	1	2	3	1	3	1	1	1	1	5	1	1	4	5	4	4	3	4	1	4	3	1	/	1	1	/	/	/
EVM(L)45 5-2F6/30	5	1	3	2	1	3	1	1	1	1	5	1	1	4	5	4	4	3	4	1	4	3	1	/	1	1	/	/	/
EVM(L)45 5-1F6/30	5	1	4	1	1	3	1	1	1	1	5	1	1	4	5	4	4	3	4	1	4	3	1	/	1	1	/	/	/
EVM(L)45 5-0F6/37	5	1	5	/	1	3	1	1	1	1	5	1	1	4	5	4	4	3	4	1	4	3	1	/	1	1	/	/	/
EVM(L)45 6-3F6/37	6	1	3	3	1	4	1	1	1	1	6	1	1	5	6	4	4	3	4	1	4	3	1	/	1	1	/	/	/
EVM(L)45 6-2F6/37	6	1	4	2	1	4	1	1	1	1	6	1	1	5	6	4	4	3	4	1	4	3	1	/	1	1	/	/	/
EVM(L)45 6-1F6/37	6	1	5	1	1	4	1	1	1	1	6	1	1	5	6	4	4	3	4	1	4	3	1	/	1	1	/	/	/

BEARINGS EVM(L)45

Pump Type	N° 56
EVM(L)45 1-1F6/5.5	6310 ZZ C3
EVM(L)45 1-0F6/7.5	6310 ZZ C3
EVM(L)45 2-2F6/11	6313 ZZ C3
EVM(L)45 2-1F6/11	6313 ZZ C3
EVM(L)45 2-0F6/15	6313 ZZ C3
EVM(L)45 3-3F6/15	6313 ZZ C3
EVM(L)45 3-2F6/15	6313 ZZ C3
EVM(L)45 3-1F6/18.5	6313 ZZ C3
EVM(L)45 3-0F6/22	6313 ZZ C3
EVM(L)45 4-3F6/18.5	6313 ZZ C3
EVM(L)45 4-2F6/22	6315 ZZ C3
EVM(L)45 4-1F6/30	6315 ZZDT C3 *
EVM(L)45 4-0F6/30	6315 ZZDT C3 *
EVM(L)45 5-3F6/30	6315 ZZDT C3 *
EVM(L)45 5-2F6/30	6315 ZZDT C3 *
EVM(L)45 5-1F6/30	6315 ZZDT C3 *
EVM(L)45 5-0F6/37	6315 ZZDT C3 *
EVM(L)45 6-3F6/37	6315 ZZDT C3 *
EVM(L)45 6-2F6/37	6315 ZZDT C3 *
EVM(L)45 6-1F6/37	6315 ZZDT C3 *

*DT=Two single row deep groove ball bearings matched for paired mounting in a tandem arrangement.

EBARA Pumps Europe reserves the right to make changes without prior notice

PERFORMANCE CURVE
EVMG45

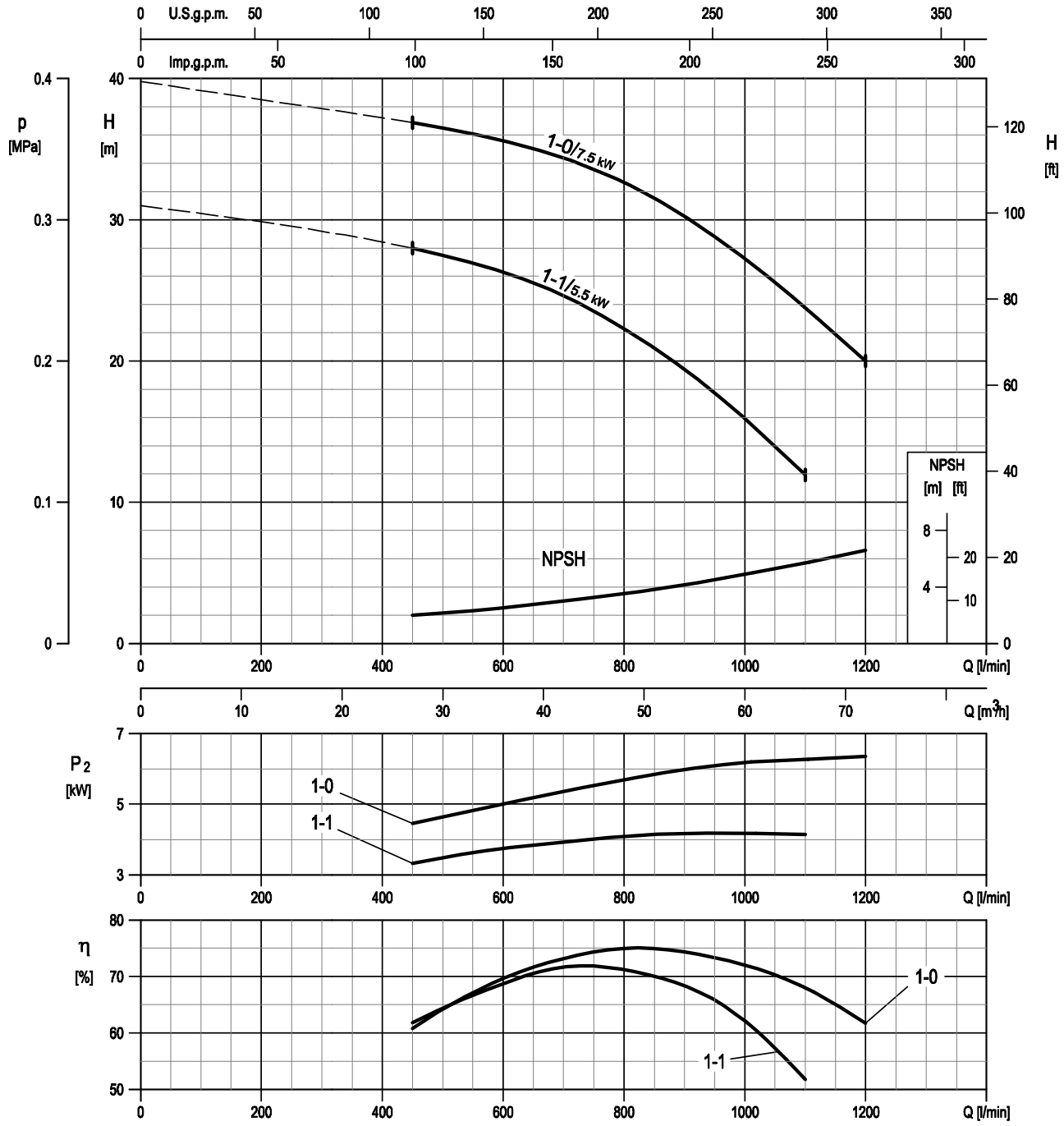

Rotation speed ≈3500 min-1
Test standard: ISO 9906:2012 - Grade 3B

EBARA
EBARA Pumps Europe
EBARA Pumps Europe reserves the right to make changes without prior notice

PERFORMANCE CURVE
EVMG45

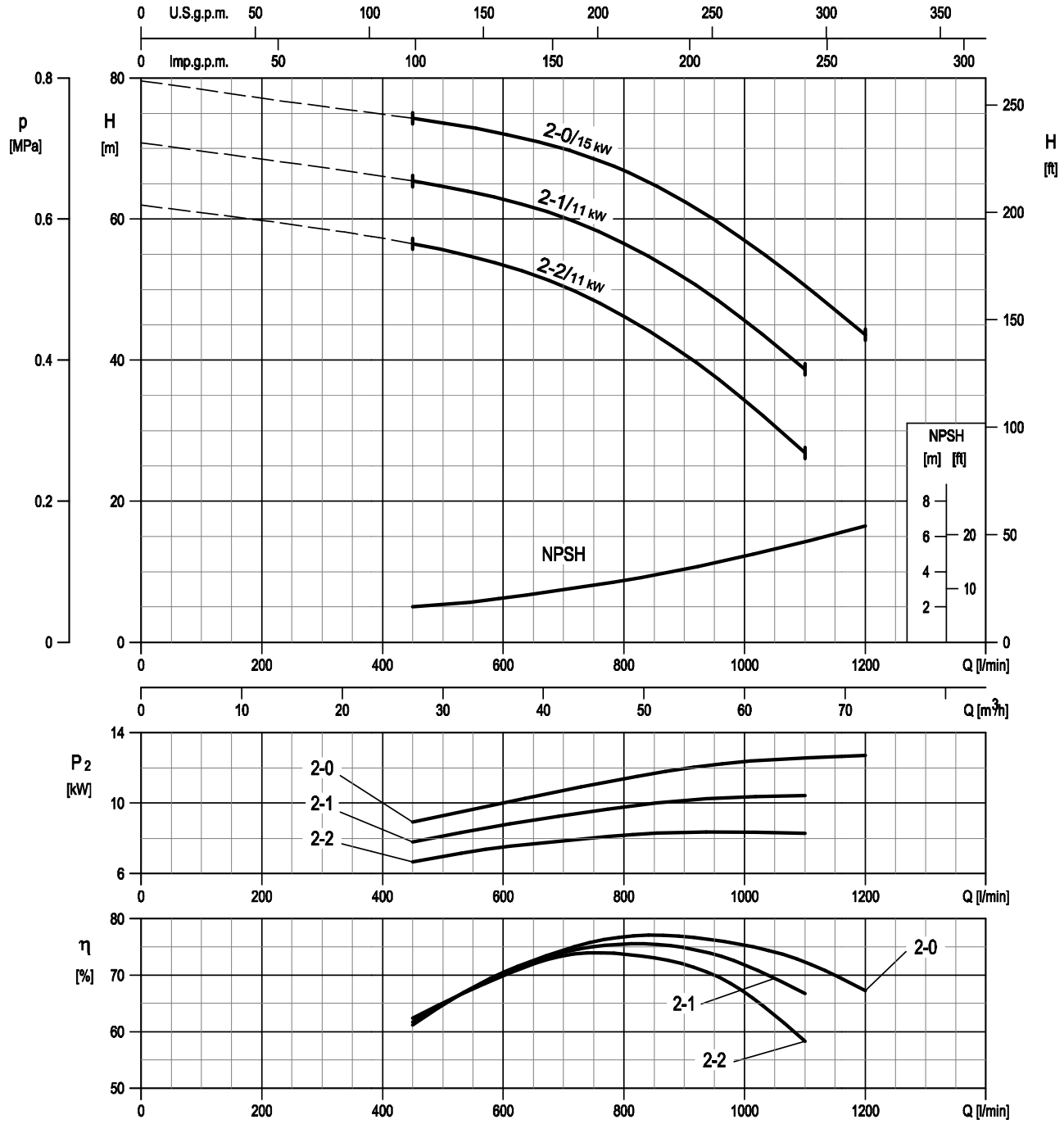

Rotation speed ≈3500 min-1
Test standard: ISO 9906:2012 - Grade 3B

EBARA Pumps Europe reserves the right to make changes without prior notice

PERFORMANCE CURVE
EVMG45

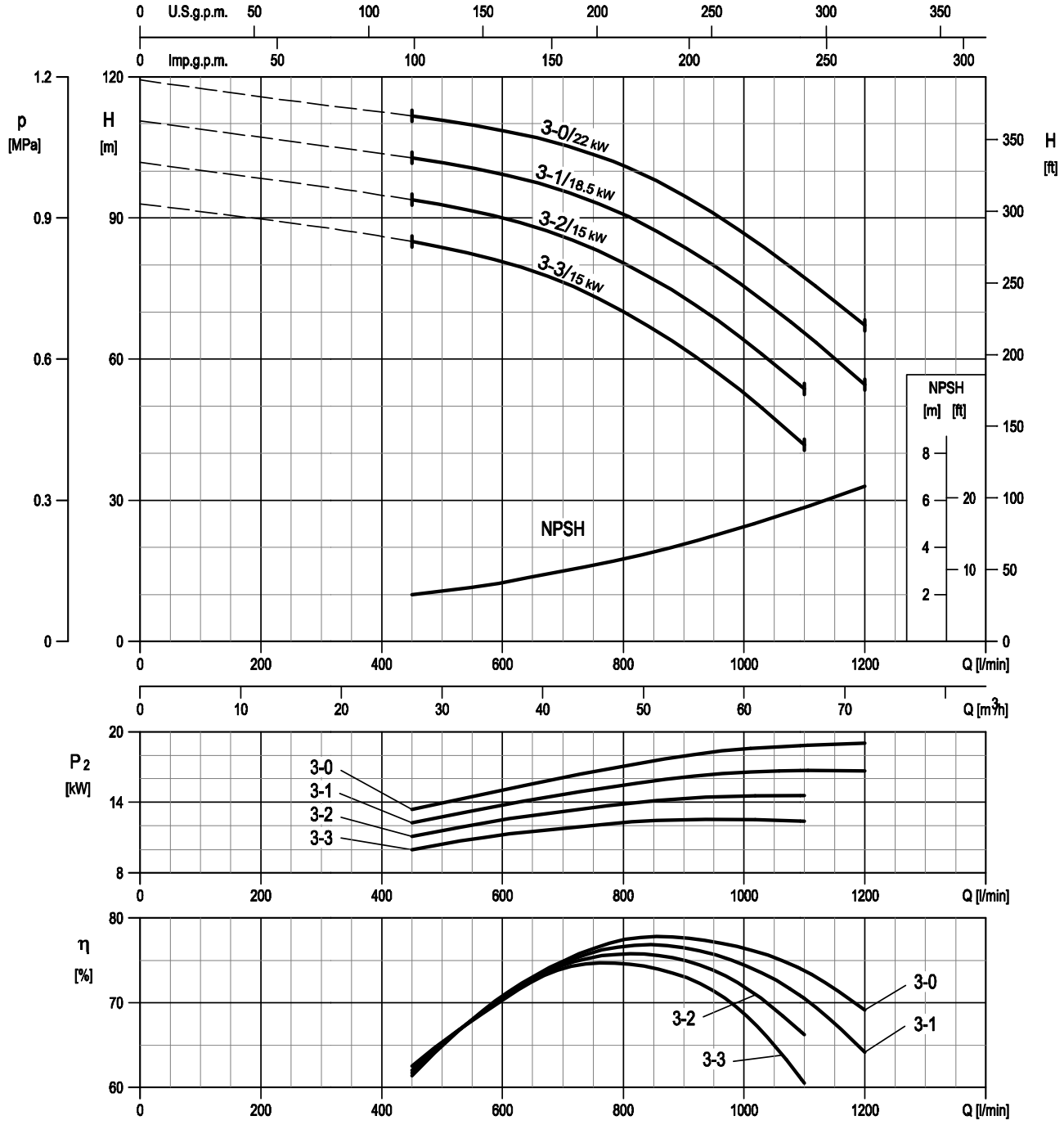

Rotation speed ≈3500 min-1
Test standard: ISO 9906:2012 - Grade 3B

EBARA Pumps Europe reserves the right to make changes without prior notice

PERFORMANCE CURVE
EVMG45

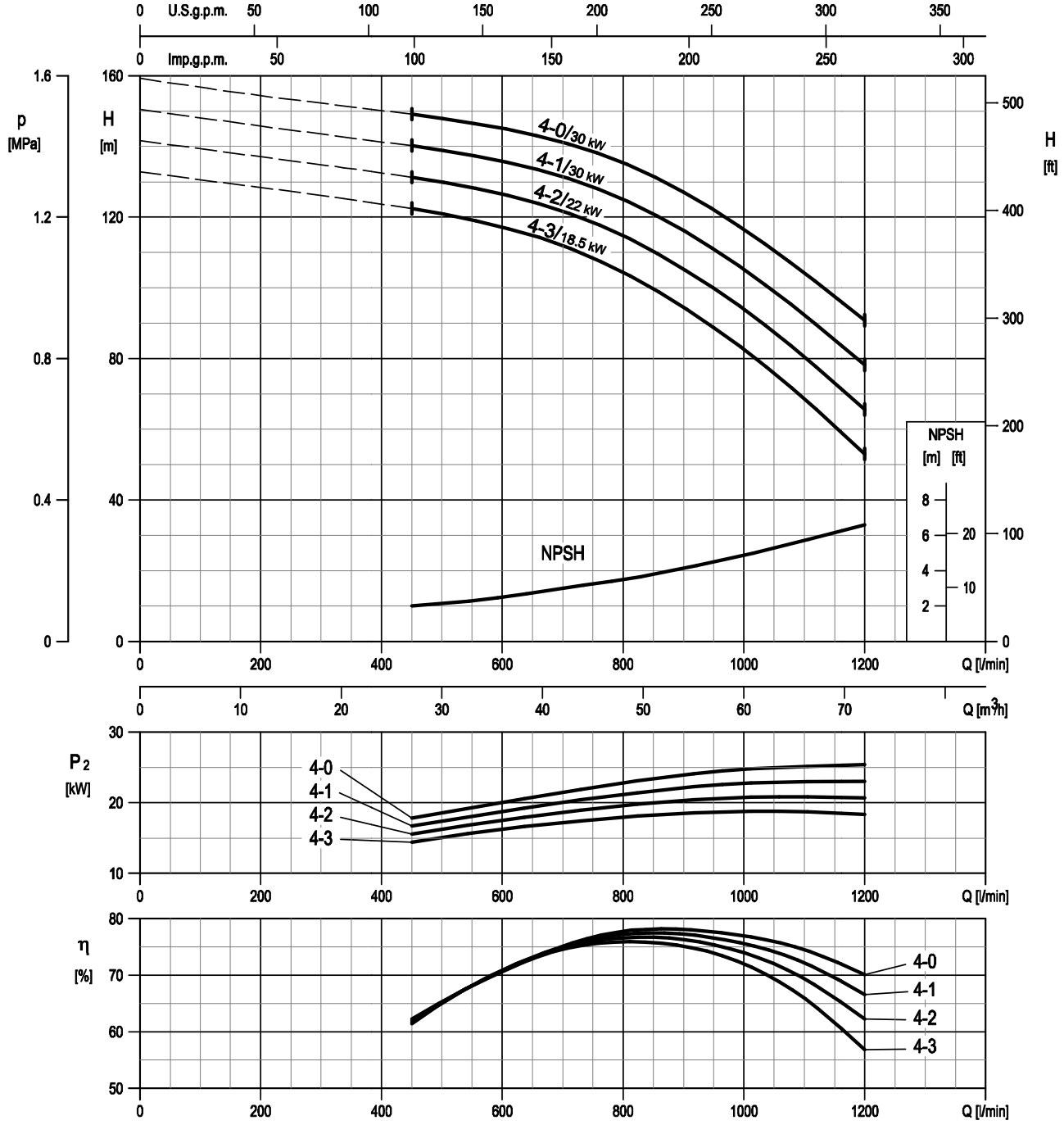

Rotation speed ≈3500 min-1
Test standard: ISO 9906:2012 - Grade 3B

EBARA Pumps Europe

EBARA Pumps Europe reserves the right to make changes without prior notice

PERFORMANCE CURVE
EVMG45

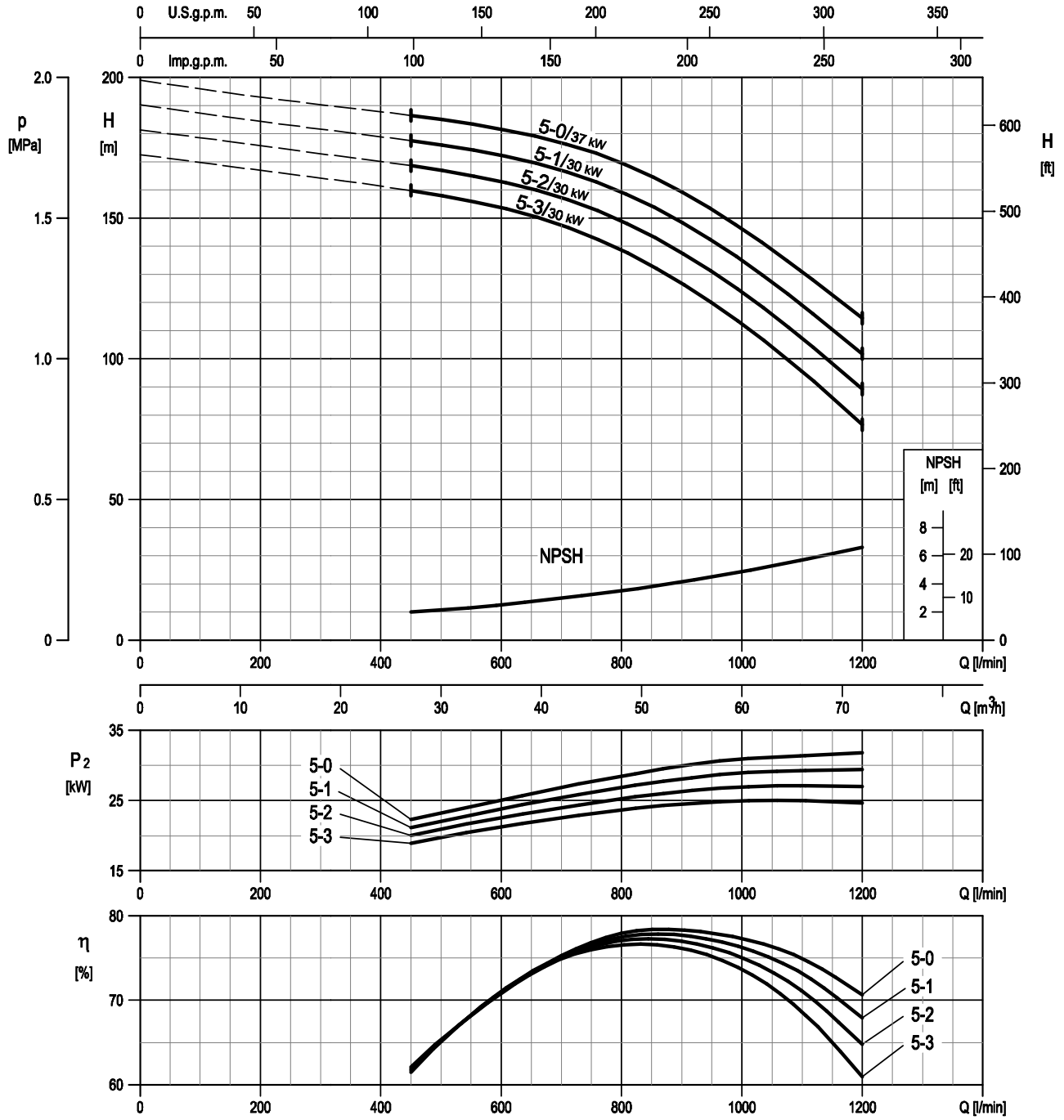

Rotation speed ≈3500 min-1
Test standard: ISO 9906:2012 - Grade 3B

EBARA Pumps Europe
EBARA Pumps Europe reserves the right to make changes without prior notice

VERTICAL MULTISTAGE PUMPS EVM

PERFORMANCE CURVE
EVMG45

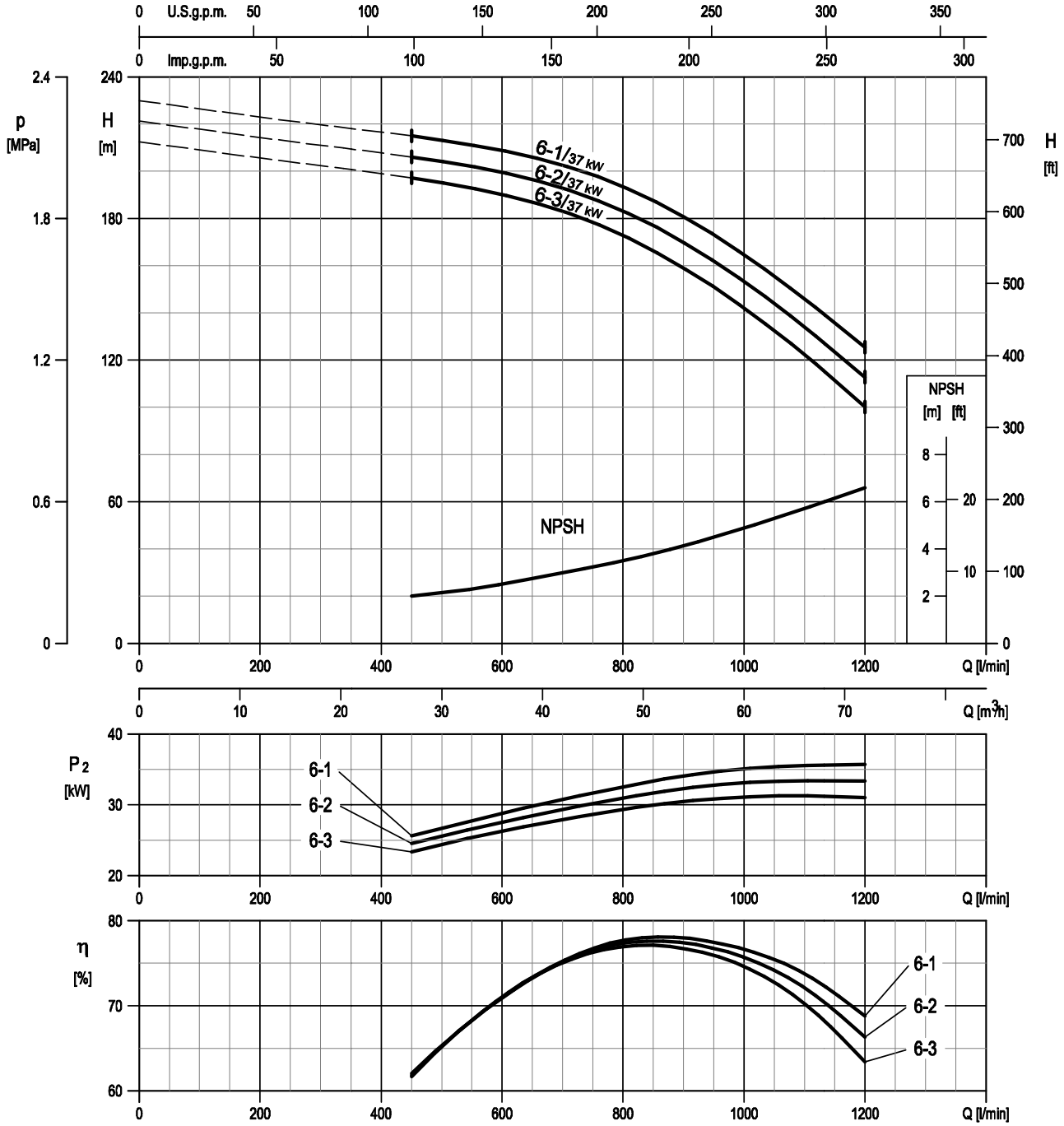

Rotation speed ≈3500 min-1
Test standard: ISO 9906:2012 - Grade 3B

EBARA Pumps Europe reserves the right to make changes without prior notice

TECHNICAL DATA
EVMG45

Dimensional sketch

Round flange (F) - DN80

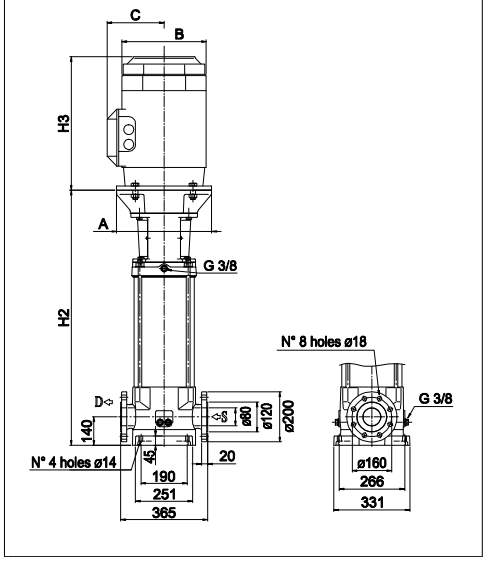

Dimensions [mm] and Weights [Kg]

Pump Type	Pmax [MPa]	Motor kW	Size	A	3 ~ B	C	H3	Round flange (F) H2	Weight Pump	Weight Pump + Motor
EVMG45 1-1F6/5.5	1.6	5.5	132 S	300	225	160	328	546	56	94.6
EVMG45 1-0F6/7.5	1.6	7.5	132 S	300	225	160	350	546	56	96.4
EVMG45 2-2F6/11	1.6	11	160 M	350	248	194	476	749	58	120.5
EVMG45 2-1F6/11	1.6	11	160 M	350	248	194	476	749	58	120.5
EVMG45 2-0F6/15	1.6	15	160 M	350	317	238	498	749	58	146.9
EVMG45 3-3F6/15	1.6	15	160 M	350	317	238	498	822	74	162.9
EVMG45 3-2F6/15	1.6	15	160 M	350	317	238	498	822	74	162.9
EVMG45 3-1F6/18.5	1.6	18.5	160 L	350	317	238	542	822	74	178
EVMG45 3-0F6/22	1.6	22	180 M	350	360	268	577	822	74	237
EVMG45 4-3F6/18.5	1.6	18.5	160 L	350	317	238	542	894	77	181
EVMG45 4-2F6/22	1.6	22	180 M	350	360	268	577	894	77	240
EVMG45 4-1F6/30	1.6	30	200 L	400	399	300	658	909	77	305
EVMG45 4-0F6/30	1.6	30	200 L	400	399	300	658	909	77	305
EVMG45 5-3F6/30	2.5	30	200 L	400	399	300	658	981	96	324
EVMG45 5-2F6/30	2.5	30	200 L	400	399	300	658	981	96	324
EVMG45 5-1F6/30	2.5	30	200 L	400	399	300	658	981	96	324
EVMG45 5-0F6/37	2.5	37	200 L	400	399	300	658	981	96	338
EVMG45 6-3F6/37	2.5	37	200 L	400	399	300	658	1053	99	341
EVMG45 6-2F6/37	2.5	37	200 L	400	399	300	658	1053	99	341
EVMG45 6-1F6/37	2.5	37	200 L	400	399	300	658	1053	99	341

1.6 MPa=16 bar ; 2.5 MPa=25 bar ; 3.0 MPa=30 bar

EBARA Pumps Europe reserves the right to make changes without prior notice

SECTIONAL VIEW
EVMG45

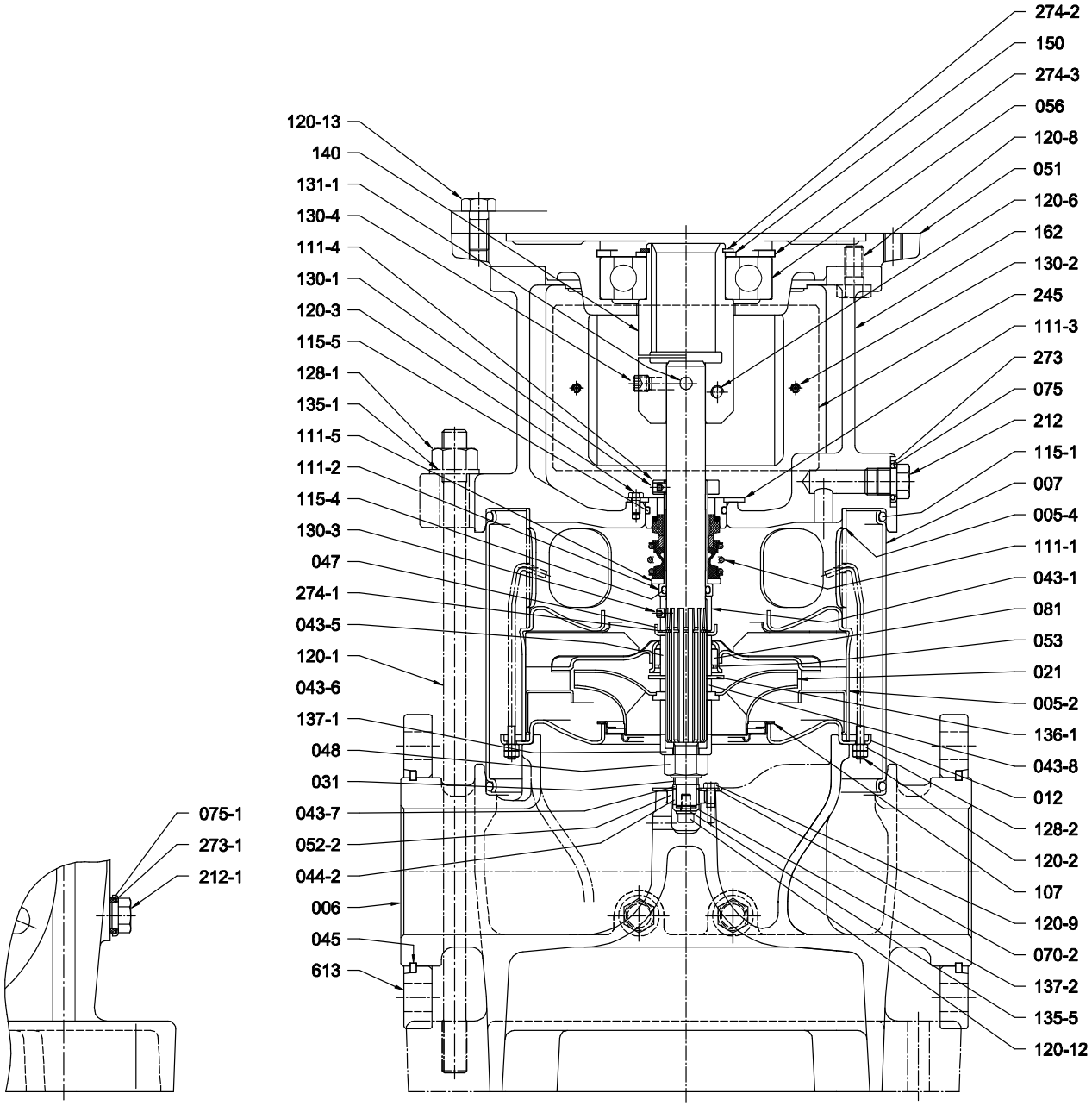

Pump with single ball bearing

EBARA Pumps Europe reserves the right to make changes without prior notice

SECTIONAL VIEW
EVMG45

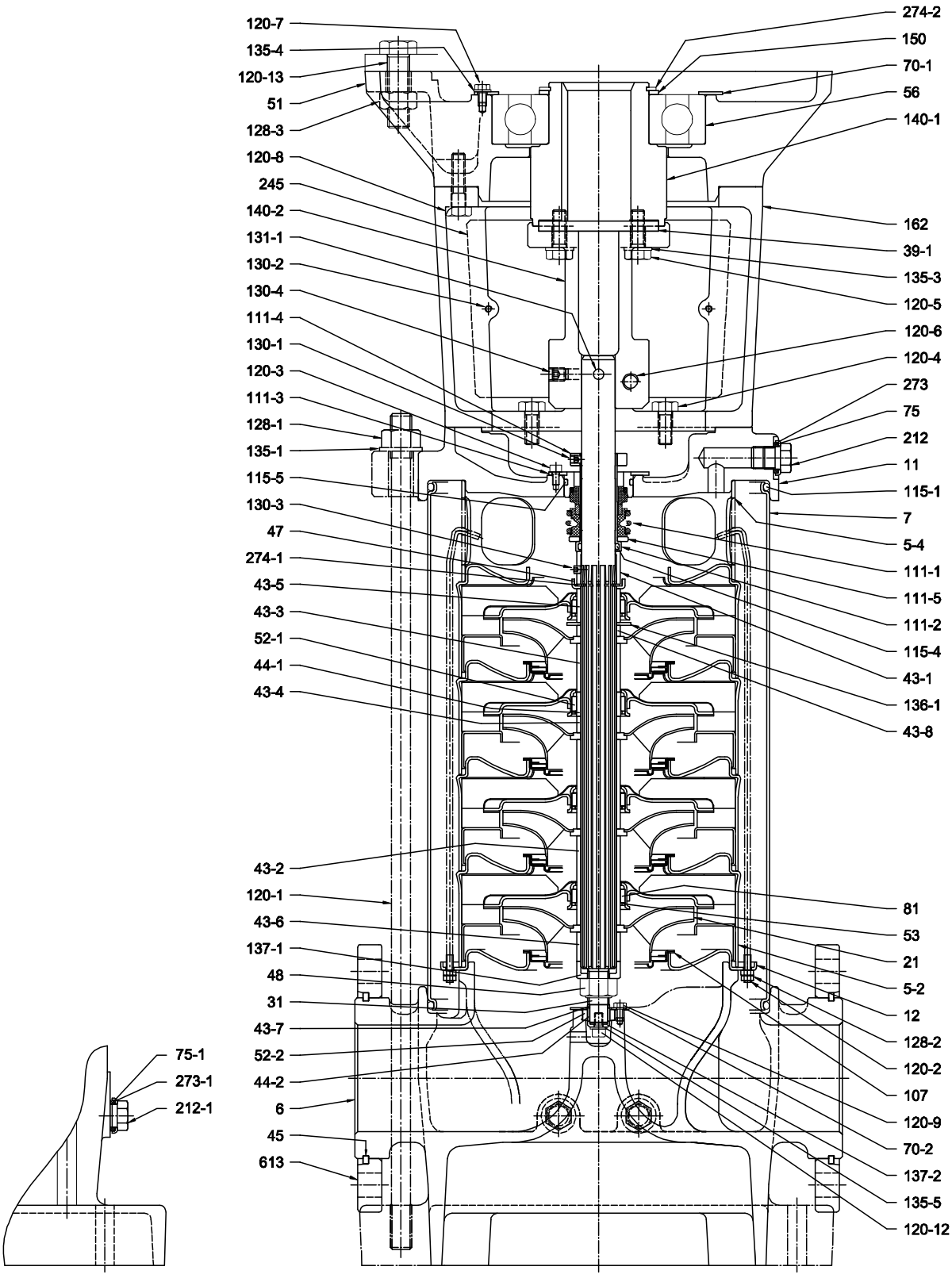

Pump with single ball bearing

EBARA Pumps Europe reserves the right to make changes without prior notice

SECTIONAL VIEW
EVMG45

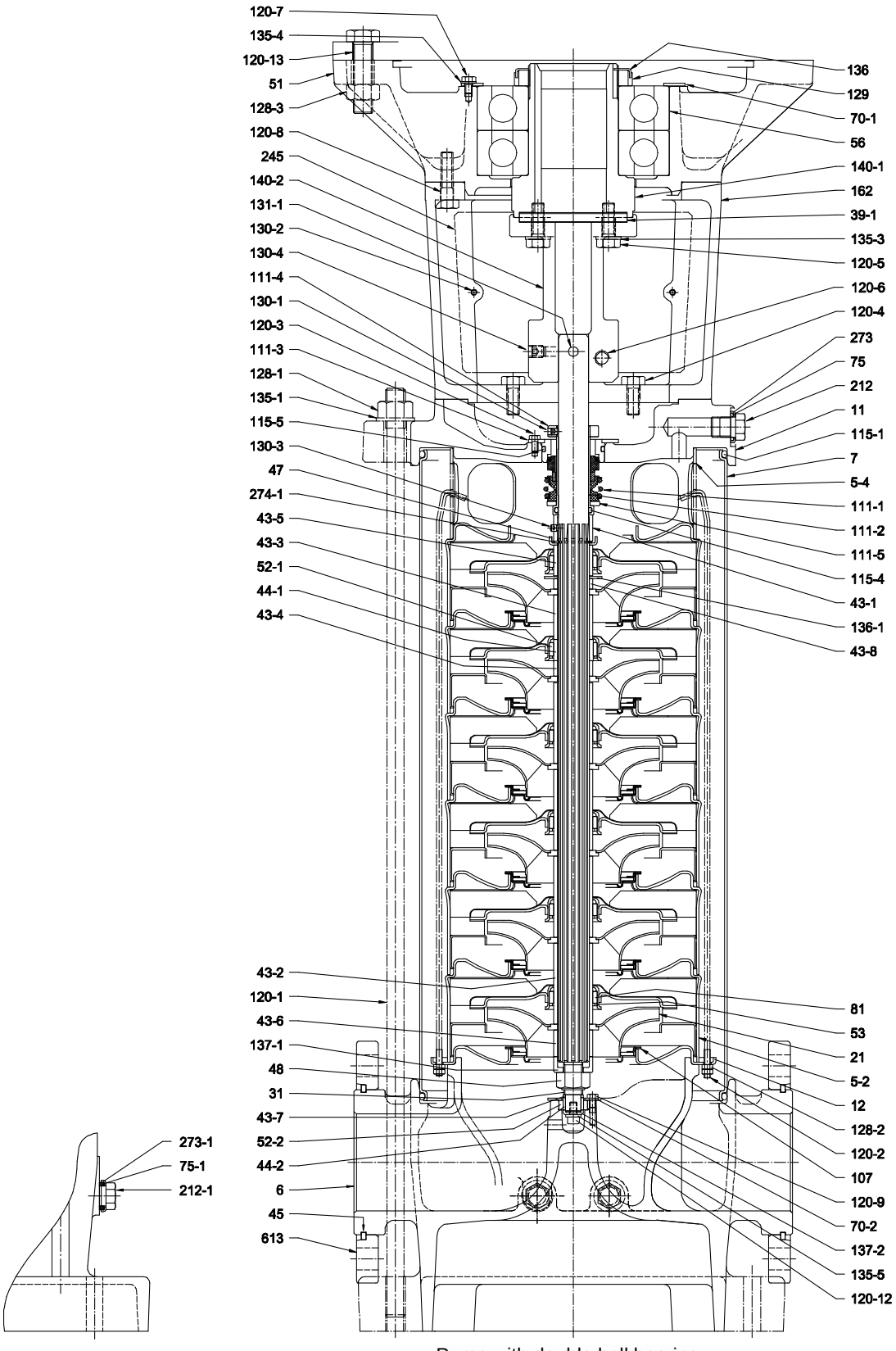

Pump with double ball bearing

EBARA Pumps Europe

EBARA Pumps Europe reserves the right to make changes without prior notice

SECTIONAL TABLE
EVMG45

N°	PART NAME		MATERIAL EVMG	DIMENSIONS	STANDARD
5-2	Intermediate casing		EN 1.4301 (AISI 304)		
5-4	Discharge casing		EN 1.4301 (AISI 304)		
6	Bottom casing		Cast iron EN GJL 250 EN 1561		
7	Outer casing		EN 1.4301 (AISI 304)		
11	Casing cover		Cast iron EN GJL 250 EN 1561		
12	Suction cover		EN. 1.1301 (AISI304)		
21	Impeller		EN 1.4301 (AISI 304)		
21-1	Reduced impeller				
31	Shaft		EN 1.4401 (AISI 316)		
39-1	Key		Carbon steel	12X8X90	UNI 6604
43-1	Shaft sleeve (mechanical seal)		EN 1.4301 (AISI 304)		
43-2	Shaft sleeve (intermediate)		EN 1.4301 (AISI 304)		
43-3	Shaft sleeve (bearing)		EN 1.4301 (AISI 304)		
43-4	Shaft sleeve (adjustment)		EN 1.4301 (AISI 304)		
43-5	Shaft sleeve (last stage)		EN 1.4301 (AISI 304)		
43-6	Shaft sleeve (adjustment)		EN 1.4301 (AISI 304)		
43-7	Shaft sleeve		EN 1.4301 (AISI 304)		
43-8	Shaft sleeve (discharge-lower)		EN 1.4301 (AISI 304)		
44-1	Shaft sleeve bearing		Tungsten carbide		
44-2	Bearing sleeve (bottom bearing)		Tungsten carbide		
45	Flange holder		EN 1.402 (AISI 420)		
47	Ring holder		EN 1.4301 (AISI 304)		
48	Impeller nut		A2-70 UNI 7323 with inox insert	M16	
51	Motor adapter		Cast iron EN-GJL-200-EN 1561		
52-1	Bearing		Tungsten carbide		
52-2	Bearing		Tungsten carbide		
53	Bush holder		EN 1.4301 (AISI 304)		
56	Ball bearing		see table page 361		
70-1	Ring for bearing		EN 1.4301 (AISI 304)		
70-2	Ring for bearing		EN 1.4301 (AISI 304)		
75	O-Ring (plug)		EPDM		
75-1	O-Ring (plug)		EPDM		
81	Bush		PTFE		
107	Liner ring		PTFE /EN 1.4401 (AISI316)		
111-1	Mechanical seal		Silicon carbide /Carbon/FPM		
111-2	Mechanical seal cartridge		EN 1.4301 (AISI 304)		
111-3	Mechanical seal seat		EN 1.4301 (AISI 304)		
111-4	Seal holder		Brass OT 58 UNI 5705		
111-5	Adjusting ring		EN 1.4301 (AISI 304)		
115-1	O-Ring (outer casing)		EPDM	D.240.66X5.34	
115-4	O-Ring (cartridege sleeve)		EPDM	D.24.99X3.53	
115-5	O-Ring (seal cover)		EPDM	D.44.04X3.53	
120-1	Tie Rod		Galvanized steel 6.8 strenght class ISO 898/1		
120-2	Tie Rod		EN 1.4301 (AISI 304)		
120-3	Screw		A2-70 UNI 7323	M5X10	UNI 5931
120-4	Screw		Galvanized steel 8.8 strenght class ISO 898/1	M10X25	UNI 5739
120-5	Screw for coupling		Galvanized steel 8.8 strenght class ISO 898/1	M10X30	UNI 5739
120-6	Screw for coupling	EVM 45 1	Galvanized steel 8.8 strenght class ISO 898/1	M8X20	UNI 5931
		EVM 45 2 to 6		M12X30	UNI 5931
120-7	Screw		Galvanized steel 8.8 strenght class ISO 898/1	M6X10	UNI 5739
120-8	Screw	EVM 45 1	Galvanized steel 8.8 strenght class ISO 898/1	M12X25	UNI 5739
		EVM 45 2 to 6		M10X30	UNI 5739
120-9	Screw	EVML	EN 1.4301 (AISI 304)	M5X8	UNI 5737
		EVM, EVMG			UNI 5739
120-12	Screw		EN 1.4301 (AISI 304)	M6X20	UNI 5931
120-13	Screw for motor	EVM45 1-0, 1-1	Galvanized steel 8.8 strenght class ISO 898/1	M12X30	UNI 5739
		EVM45 6		M16X55	UNI 5737
		EVM45 2 to 5-3		M16X65	UNI 5739
128-1	Nut for tie rod		Galvanized steel	M16	UNI 5588
128-2	Nut		Carbon steel	M5	UNI 5588
128-3	Nut		Galvanized steel	M16	UNI 5588
129	Lock nut		Carbon steel	M75X2	
130-1	Set screw		A2- 70 UNI 7323	M6X8	UNI 5923
130-2	Screw for coupling guard		A2-70 UNI 7323	M5X6	UNI 7687
130-3	Set screw		A2- 70 UNI 7323	M6X6	UNI 5923
130-4	Set screw		Carbon steel	M10X10	UNI 5923
131-1	Pin for shaft		Carbon steel		
131-2	Elastic pin		-	6X25	UNI 6873
135-1	Washer		Galvanized steel	17X30X3	UNI 6592
135-3	Washer		Galvanized steel	10.5X17.5X2.2	UNI 1751
135-4	Washer		Plated carbon steel	6.4	UNI 1751
135-5	Washer		EN 1.4301 (AISI 304)		
136	Bearing washer		Carbon steel		
136-1	Stopper ring		EN 1.4301 (AISI 304)		
137-1	Impeller spacer		EN 1.4301 (AISI 304)		
137-2	Shaft spacer		EN 1.4301 (AISI 304)		
140	Coupling		Brass OT 58 UNI 5705		
140-1	Motor coupling		Carbon steel		
140-2	Coupling (pump side)		Carbon steel		
150	Spacer		Carbon steel		
160	Base		-		
162	Mator bracket		Cast iron EN-GJL-200 EN1561		
212	Plug		EN 1.4301 (AISI 304)		
212-1	Plug		EN 1.4301 (AISI 304)		
245	Coupling guard		EN 1.4301 (AISI 304)		
273	Plug washer		EN 1.4301 (AISI 304)		
273-1	Plug washer		EN 1.4301 (AISI 304)		
274-1	C-type snap ring		EN 1.4301 (AISI 304)	D.26	UNI 7435
274-2	C-Typr snap ring	EVM45 1-0, 1-1	Carbon steel TC80	D.50	UNI 7435
		EVM45 2 to 4-3		D.65	UNI 7435
		EVM45 4-2		D.75	UNI 7535
274-3	C-Typr snap ring		Carbon steel TC80	D.110	UNI 7437
613	Flange		Carbon steel		

EBARA Pumps Europe reserves the right to make changes without prior notice

QUANTITY FOR MODEL EVMG45

Pump Type	N°																												
	5-2	11	21	21-1	39-1	43-2	43-3	43-4	44-1	52-1	53	56	70-1	81	107	120-4	120-5	120-7	128-3	129	135-3	135-4	136	140	140-1	140-2	150	274-2	274-3
EVMG45 1-1F6/5.5	1	/	/	1	/	/	/	/	/	/	1	1	/	1	1	/	/	/	/	/	/	/	/	1	/	/	1	1	1
EVMG45 1-0F6/7.5	1	/	1	/	/	/	/	/	/	/	1	1	/	1	1	/	/	/	/	/	/	/	/	1	/	/	1	1	1
EVMG45 2-2F6/11	2	1	/	2	1	1	/	/	/	/	2	1	1	2	2	4	4	3	4	/	4	3	/	/	1	1	1	1	/
EVMG45 2-1F6/11	2	1	1	1	1	1	/	/	/	/	2	1	1	2	2	4	4	3	4	/	4	3	/	/	1	1	1	1	/
EVMG45 2-0F6/15	2	1	2	/	1	1	/	/	/	/	2	1	1	2	2	4	4	3	4	/	4	3	/	/	1	1	1	1	/
EVMG45 3-3F6/15	3	1	/	3	1	2	/	/	/	/	3	1	1	3	3	4	4	3	4	/	4	3	/	/	1	1	1	1	/
EVMG45 3-2F6/15	3	1	1	2	1	2	/	/	/	/	3	1	1	3	3	4	4	3	4	/	4	3	/	/	1	1	1	1	/
EVMG45 3-1F6/18.5	3	1	2	1	1	2	/	/	/	/	3	1	1	3	3	4	4	3	4	/	4	3	/	/	1	1	1	1	/
EVMG45 3-0F6/22	3	1	3	/	1	2	/	/	/	/	3	1	1	3	3	4	4	3	4	/	4	3	/	/	1	1	1	1	/
EVMG45 4-3F6/18.5	4	1	1	3	1	2	1	1	1	1	4	1	1	3	4	4	4	3	4	/	4	3	/	/	1	1	1	1	/
EVMG45 4-2F6/22	4	1	2	2	1	2	1	1	1	1	4	1	1	3	4	4	4	3	4	/	4	3	/	/	1	1	1	1	/
EVMG45 4-1F6/30	4	1	3	1	1	2	1	1	1	1	4	1	1	3	4	4	4	3	4	1	4	3	1	/	1	1	/	/	/
EVMG45 4-0F6/30	4	1	4	/	1	2	1	1	1	1	4	1	1	3	4	4	4	3	4	1	4	3	1	/	1	1	/	/	/
EVMG45 5-3F6/30	5	1	2	3	1	3	1	1	1	1	5	1	1	4	5	4	4	3	4	1	4	3	1	/	1	1	/	/	/
EVMG45 5-2F6/30	5	1	3	2	1	3	1	1	1	1	5	1	1	4	5	4	4	3	4	1	4	3	1	/	1	1	/	/	/
EVMG45 5-1F6/30	5	1	4	1	1	3	1	1	1	1	5	1	1	4	5	4	4	3	4	1	4	3	1	/	1	1	/	/	/
EVMG45 5-0F6/37	5	1	5	/	1	3	1	1	1	1	5	1	1	4	5	4	4	3	4	1	4	3	1	/	1	1	/	/	/
EVMG45 6-3F6/37	6	1	3	3	1	4	1	1	1	1	6	1	1	5	6	4	4	3	4	1	4	3	1	/	1	1	/	/	/
EVMG45 6-2F6/37	6	1	4	2	1	4	1	1	1	1	6	1	1	5	6	4	4	3	4	1	4	3	1	/	1	1	/	/	/
EVMG45 6-1F6/37	6	1	5	1	1	4	1	1	1	1	6	1	1	5	6	4	4	3	4	1	4	3	1	/	1	1	/	/	/

BEARINGS EVMG45

Pump Type	N° 56
EVMG45 1-1F6/5.5	6310 ZZ C3
EVMG45 1-0F6/7.5	6310 ZZ C3
EVMG45 2-2F6/11	6313 ZZ C3
EVMG45 2-1F6/11	6313 ZZ C3
EVMG45 2-0F6/15	6313 ZZ C3
EVMG45 3-3F6/15	6313 ZZ C3
EVMG45 3-2F6/15	6313 ZZ C3
EVMG45 3-1F6/18.5	6313 ZZ C3
EVMG45 3-0F6/22	6313 ZZ C3
EVMG45 4-3F6/18.5	6313 ZZ C3
EVMG45 4-2F6/22	6315 ZZ C3
EVMG45 4-1F6/30	6315 ZZDT C3 *
EVMG45 4-0F6/30	6315 ZZDT C3 *
EVMG45 5-3F6/30	6315 ZZDT C3 *
EVMG45 5-2F6/30	6315 ZZDT C3 *
EVMG45 5-1F6/30	6315 ZZDT C3 *
EVMG45 5-0F6/37	6315 ZZDT C3 *
EVMG45 6-3F6/37	6315 ZZDT C3 *
EVMG45 6-2F6/37	6315 ZZDT C3 *
EVMG45 6-1F6/37	6315 ZZDT C3 *

*DT=Two single row deep groove ball bearings matched for paired mounting in a tandem arrangement.

EBARA Pumps Europe reserves the right to make changes without prior notice

PERFORMANCE CURVE
EVM(L)64

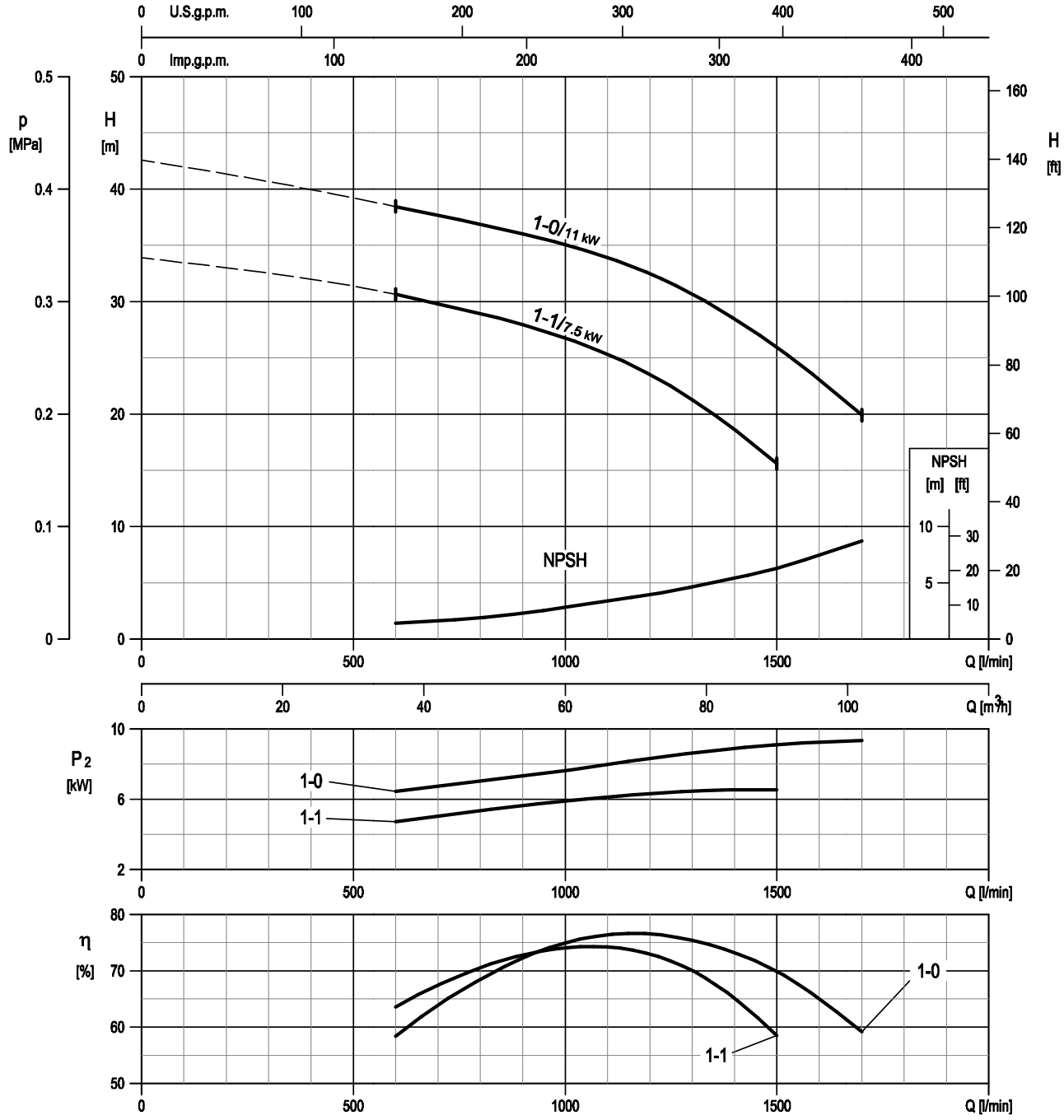

Rotation speed ≈3500 min-1
Test standard: ISO 9906:2012 - Grade 3B

EBARA Pumps Europe reserves the right to make changes without prior notice

PERFORMANCE CURVE
EVM(L)64

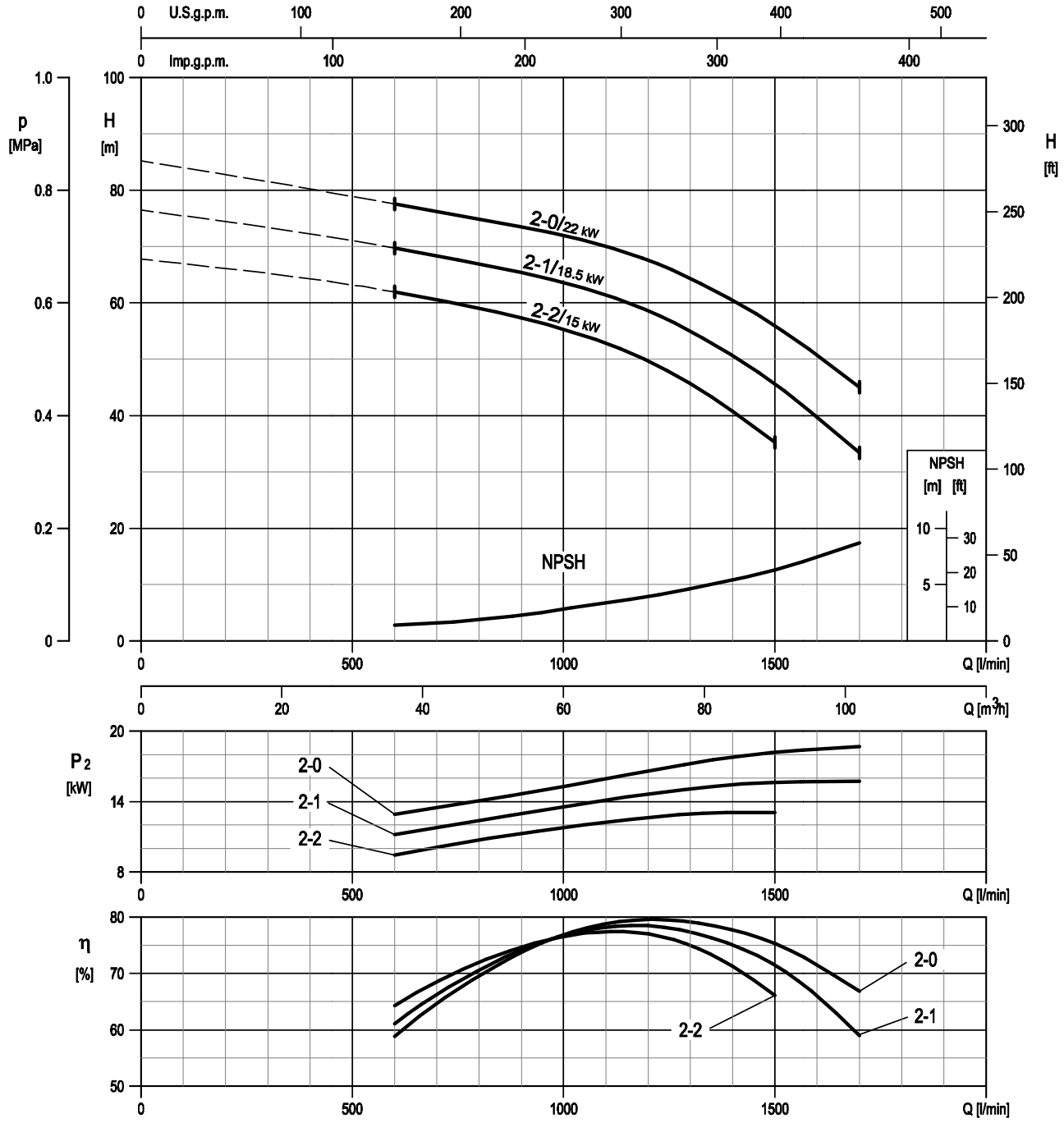

Rotation speed ≈3500 min-1
Test standard: ISO 9906:2012 - Grade 3B

EBARA Pumps Europe reserves the right to make changes without prior notice

PERFORMANCE CURVE
EVM(L)64

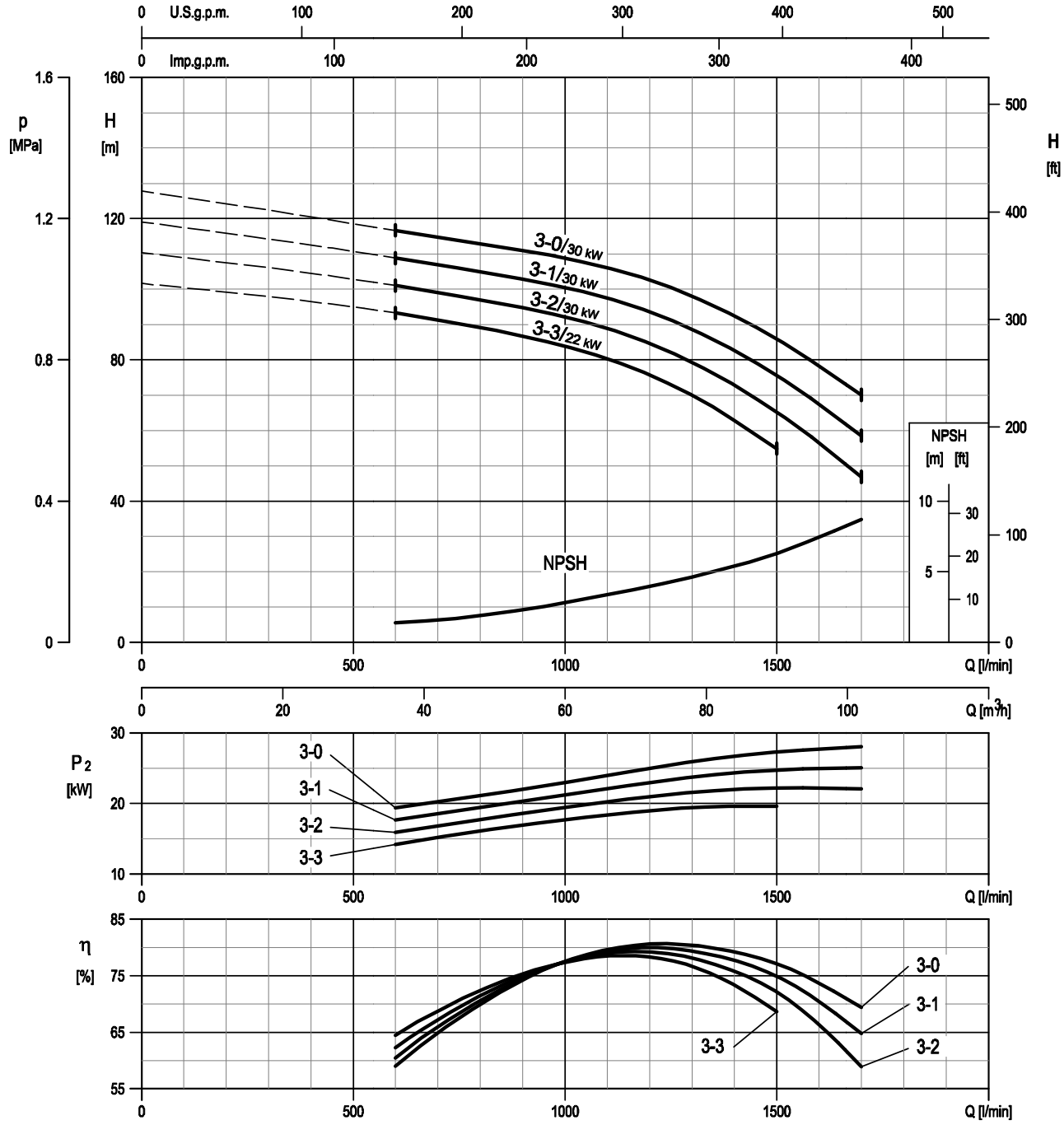

Rotation speed ≈3500 min-1
Test standard: ISO 9906:2012 - Grade 3B

EBARA Pumps Europe reserves the right to make changes without prior notice

VERTICAL MULTISTAGE PUMPS EVM

PERFORMANCE CURVE
EVM(L)64

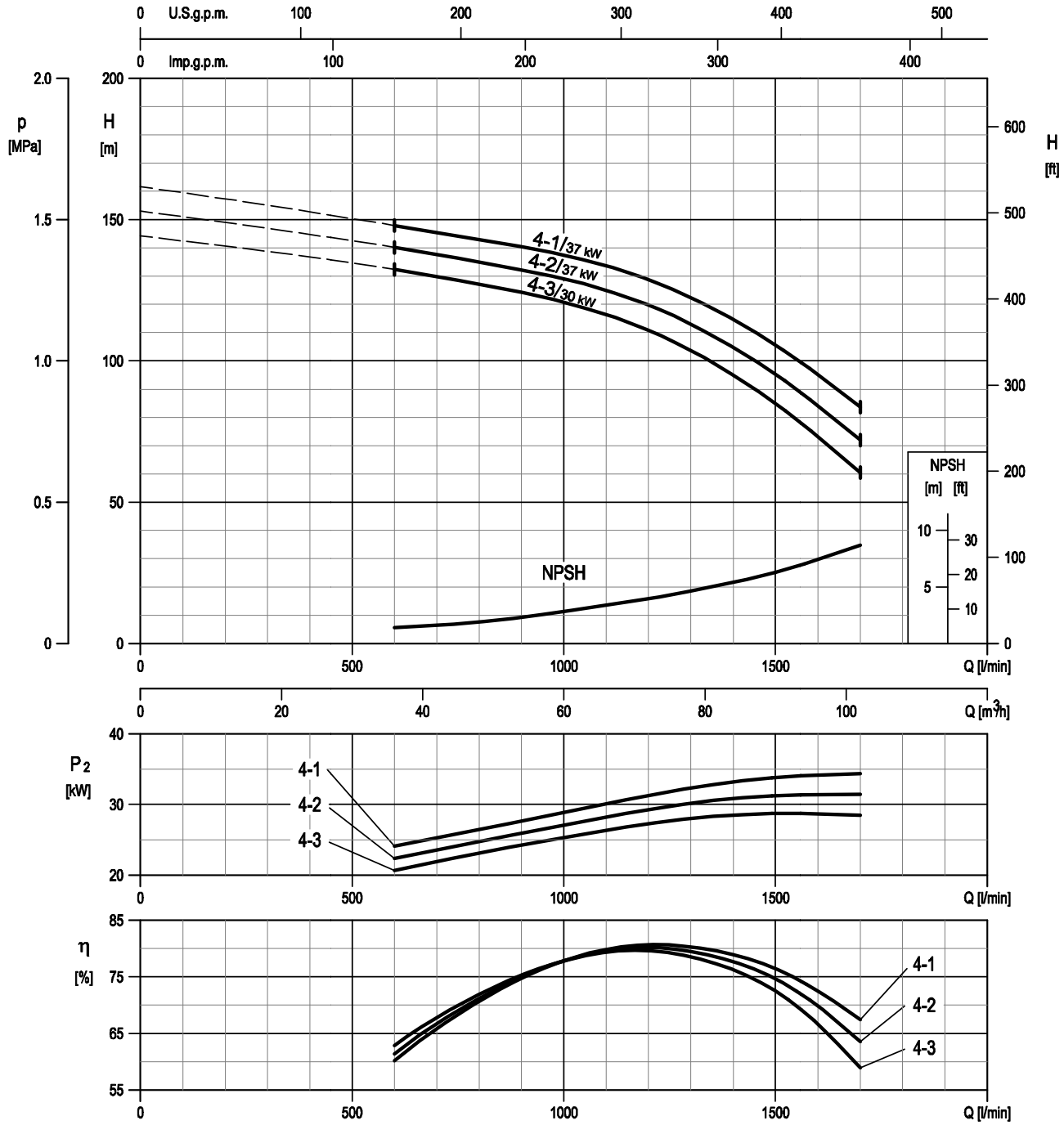

Rotation speed ≈3500 min-1
Test standard: ISO 9906:2012 - Grade 3B

EBARA Pumps Europe reserves the right to make changes without prior notice

TECHNICAL DATA
EVM(L)64

Dimensional sketch

Round flange (F) - DN100

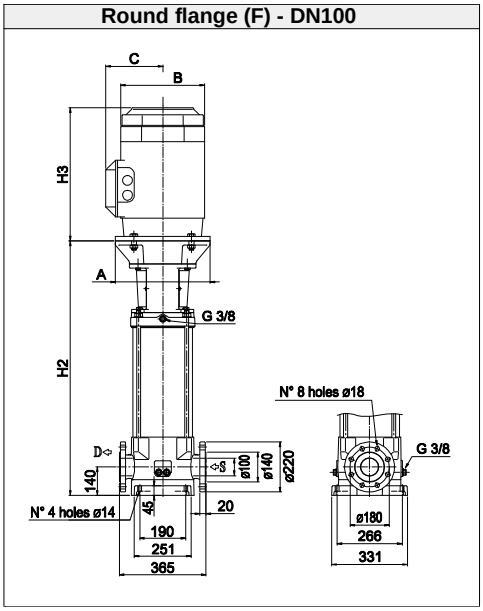

Dimensions [mm] and Weights [Kg]

Pump Type	Pmax [MPa]	Motor kW	Size	A	3 ~ B	C	H3	Round flange (F) H2	Weight Pump	Weight Pump + Motor
EVM(L)64 1-1F6/7.5	1.6	7.5	132 S	300	225	160	350	546	70	110.4
EVM(L)64 1-0F6/11	1.6	11	160 M	350	248	194	476	677	77	139.5
EVM(L)64 2-2F6/15	1.6	15	160 M	350	317	238	498	749	81	169.9
EVM(L)64 2-1F6/18.5	1.6	18.5	160 L	350	317	238	542	749	94	198
EVM(L)64 2-0F6/22	1.6	22	180 M	350	360	268	577	749	94	257
EVM(L)64 3-3F6/22	1.6	22	180 M	350	360	268	577	821	99	262
EVM(L)64 3-2F6/30	1.6	30	200 L	400	399	300	658	837	99	327
EVM(L)64 3-1F6/30	1.6	30	200 L	400	399	300	658	837	99	327
EVM(L)64 3-0F6/30	1.6	30	200 L	400	399	300	658	837	99	327
EVM(L)64 4-3F6/30	1.6	30	200 L	400	399	300	658	909	108	336
EVM(L)64 4-2F6/37	1.6	37	200 L	400	399	300	658	909	108	350
EVM(L)64 4-1F6/37	1.6	37	200 L	400	399	300	658	909	108	350

1.6 MPa=16 bar ; 2.5 MPa=25 bar

EBARA Pumps Europe reserves the right to make changes without prior notice

SECTIONAL VIEW
EVM(L)64

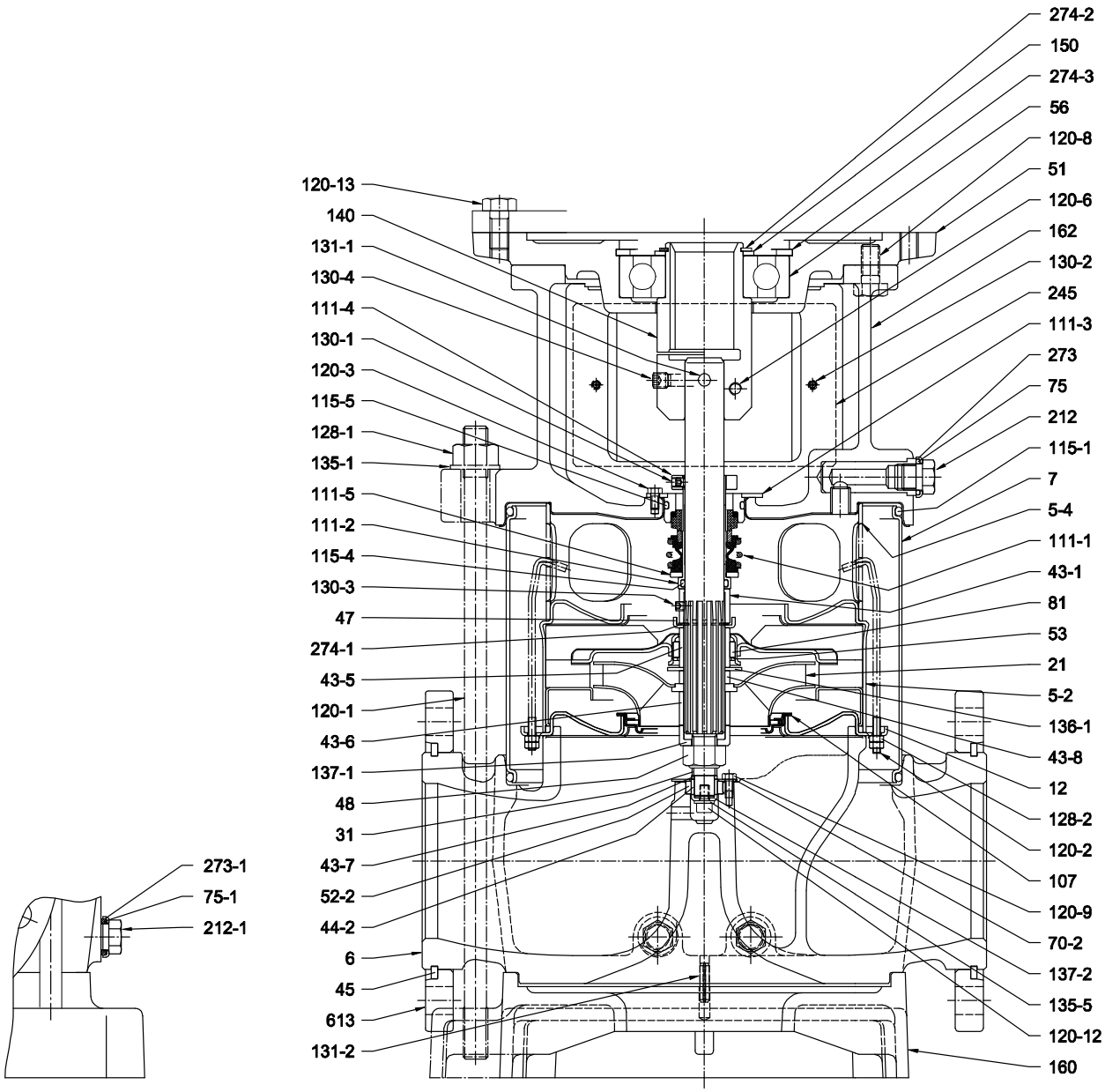

Pump with single ball bearing

EBARA Pumps Europe

EBARA Pumps Europe reserves the right to make changes without prior notice

SECTIONAL VIEW
EVM(L)64

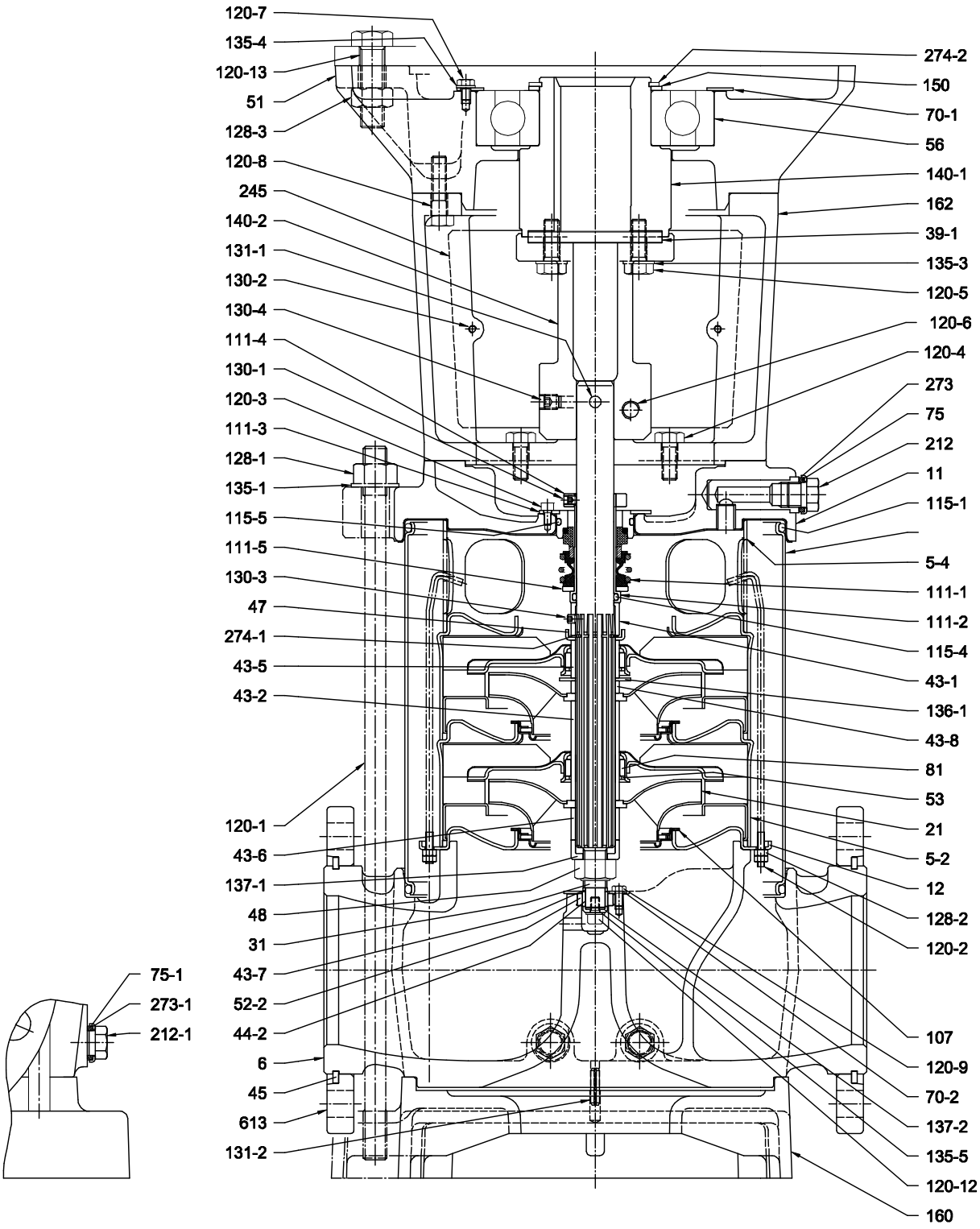

Pump with single ball bearing

EBARA Pumps Europe reserves the right to make changes without prior notice

VERTICAL MULTISTAGE PUMPS EVM

SECTIONAL VIEW
EVM(L)64

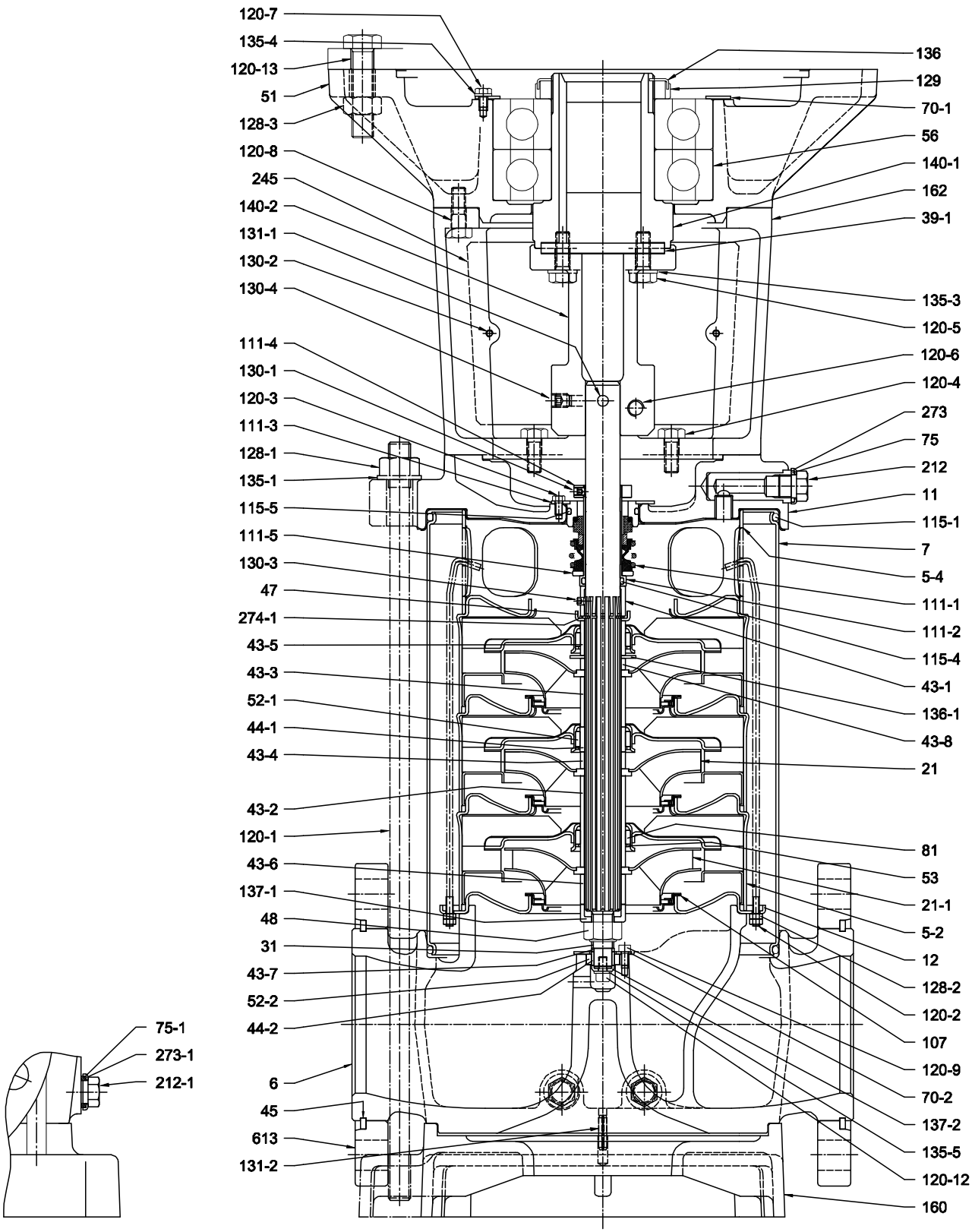

Pump with double ball bearing

EBARA Pumps Europe reserves the right to make changes without prior notice

SECTIONAL TABLE
EVM(L)64

N°	PART NAME		MATERIAL EVM	MATERIAL EVML	DIMENSIONS	STANDARD
5-2	Intermediate casing		EN 1.4301 (AISI 304)	EN 1.4401 (AISI 316)		
5-4	Discharge casing		EN 1.4301 (AISI 304)	EN 1.4401 (AISI 316)		
6	Bottom casing		EN 1.4301 (AISI 304)	EN 1.4401 (AISI 316)		
7	Outer casing		EN 1.4301 (AISI 304)	EN 1.4401 (AISI 316)		
11	Casing cover		Cast iron + EN 1.4301 (AISI 304)	Cast iron + EN 1.4401 (AISI 316)		
12	Suction cover		EN 1.4301 (AISI 304)	EN 1.4401 (AISI 316)		
21	Impeller		EN 1.4301 (AISI 304)	EN 1.4401 (AISI 316)		
21-1	Reduced impeller					
31	Shaft		EN 1.4401 (AISI 316)			
39-1	Key		Carbon steel		12X8X90	UNI 6604
43-1	Shaft sleeve (mechanical seal)		EN 1.4301 (AISI 304)	EN 1.4401 (AISI 316)		
43-2	Shaft sleeve (intermediate)		EN 1.4301 (AISI 304)	EN 1.4401 (AISI 316)		
43-3	Shaft sleeve (bearing)		EN 1.4301 (AISI 304)	EN 1.4401 (AISI 316)		
43-4	Shaft sleeve (adjustment)		EN 1.4301 (AISI 304)	EN 1.4401 (AISI 316)		
43-5	Shaft sleeve (last stage)		EN 1.4301 (AISI 304)	EN 1.4401 (AISI 316)		
43-6	Shaft sleeve (adjustment)		EN 1.4301 (AISI 304)	EN 1.4401 (AISI 316)		
43-7	Shaft sleeve (bottom bearing)		EN 1.4301 (AISI 304)	EN 1.4401 (AISI 316)		
43-8	Shaft sleeve (discharge/lower)		EN 1.4301 (AISI 304)	EN 1.4401 (AISI 316)		
44-1	Shaft sleeve bearing		Tungsten carbide			
44-2	Bearing sleeve		Tungsten carbide			
45	Flange holder		EN 1.402 (AISI 420)			
47	Ring holder		EN 1.4301 (AISI 304)	EN 1.4401 (AISI 316)		
48	Impeller nut		A2-70 UNI 7323 with inox insert	A4-70 UNI 7323 with inox insert	M16	
51	Motor adapter		Cast iron EN-GJL-200-EN 1561			
52-1	Bearing		Tungsten carbide			
52-2	Bearing		Tungsten carbide			
53	Bush holder		EN 1.4301 (AISI 304)	EN 1.4401 (AISI 316)		
56	Ball bearing		see table page 371			
70-1	Ring for bearing		EN 1.4301 (AISI 304)			
70-2	Ring for bearing		EN 1.4301 (AISI 304)	EN 1.4401 (AISI 316)		
75	O-Ring (plug)		EPDM	FPM		
75-1	O-Ring (plug)		EPDM	FPM		
81	Bush		PTFE			
107	Liner ring		PTFE / EN 1.4401 (AISI 316)			
111-1	Mechanical seal		Silicon carbide / Carbon /FPM			
111-2	Mechanical seal cartridge		EN 1.4301 (AISI 304)	EN 1.4401 (AISI 316)		
111-3	Mechanical seal seat		EN 1.4301 (AISI 304)	EN 1.4401 (AISI 316)		
111-4	Seal holder		Brass OT 58 UNI 5705	EN 1.4401 (AISI 316)		
111-5	Adjusting ring		EN 1.4301 (AISI 304)	EN 1.4401 (AISI 316)		
115-1	O-Ring (outer casing)		EPDM	FPM	D.240,66X5,34	
115-4	O-Ring (cartridge sleeve)		EPDM	FPM	D.24,99X3,53	
115-5	O-Ring (seal cover)		EPDM	FPM	D.44,04X3,53	
120-1	Tie-rod		Galvanized steel 6.8 Strenght class ISO 898/1			
120-2	Tie-rod		EN 1.4301 (AISI 304)	EN 1.4401 (AISI 316)		
120-3	Screw (mechanical seal)		A2-70 UNI 7323		M5X10	UNI 5931
120-4	Screw (casing cover)		Galvanized steel 8.8 Strenght class ISO 898/1		M10X25	UNI 5739
120-5	Screw for coupling		Galvanized steel 8.8 Strenght class ISO 898/1		M10X30	UNI 5739
120-6	Screw for coupling	EVM64 1-1	Galvanized steel 8.8 Strenght class ISO 898/1		M 8X20	UNI 5931
		EVM64 1-0 and higher			M12X30	UNI 5931
120-7	Screw		Galvanized steel		M 6X10	UNI 5739
120-8	Screw	EVM 64 1-0 to 4-3	Galvanized steel 8.8 Strenght class ISO 898/1		M10X30	UNI 5739
		EVM64 1-1			M12X35	UNI 5739
120-9	Screw	EVML	EN 1.4301 (AISI 304)	EN 1.4401 (AISI 316)	M5X8	UNI 5737
		EVM, EVMG			M5X8	UNI 5739
120-12	Screw		EN 1.4301 (AISI 304)	EN 1.4401 (AISI 316)	M 6X20	UNI 5931
120-13	Screw	EVM 64 1-1	Galvanized steel 8.8 Strenght class ISO 898/1		M12X30	UNI 5739
		EVM 64 4-1, 4-2			M16X55	UNI 5737
		EVM 64 1-0 to 4-3			M16X65	UNI 5739
128-1	Nut for tie rod		Galvanized steel		M16	UNI 5588
128-2	Nut		Carbon steel	EN 1.4401 (AISI 316)	M5	UNI 5588
128-3	Nut		Galvanized steel		M16	UNI 5588
129	Lock nut		Carbon steel			
130-1	Set screw		A2-70 UNI 7323		M6X8	UNI 5923
130-2	Screw for coupling guard		A2-70 UNI 7323		M5X6	UNI 7687
130-3	Set screw		EN 1.4301 (AISI 304)	EN 1.4401 (AISI 316)	M6X6	UNI 5923
130-4	Set screw		Galvanized steel		M10X10	UNI 5923
131-1	Pin for shaft		Carbon steel			
131-2	Elastic pin		Galvanized steel		6X25	UNI 6873
135-1	Washer		Galvanized steel		17x30x3	UNI 6592
135-3	Washer		Galvanized steel		10,5X17,5X2,2	UNI 1751
135-4	Washer		Plated carbon steel		6,4	UNI 1751
135-5	Washer		EN 1.4301 (AISI 304)	EN 1.4401 (AISI 316)	D.6	
136	Bearing washer		Carbon steel			
136-1	Stopper ring		EN 1.4301 (AISI 304)	EN 1.4401 (AISI 316)		
137-1	Impeller spacer		EN 1.4301 (AISI 304)	EN 1.4401 (AISI 316)		
137-2	Shaft spacer		EN 1.4301 (AISI 304)	EN 1.4401 (AISI 316)		
140	Coupling		Brass OT 58 UNI 5705			
140-1	Motor coupling		Carbon steel			
140-2	Coupling (pump side)		Carbon steel			
150	Spacer		Carbon steel			
160	Base		Cast iron EN-GJL-200 EN 1561			
162	Motor bracket		Cast iron EN-GJL-200-EN 1561			
212	Plug		EN 1.4301 (AISI 304)	EN 1.4401 (AISI 316)		
212-1	Plug		EN 1.4301 (AISI 304)	EN 1.4401 (AISI 316)		
245	Coupling guard		EN 1.4301 (AISI 304)			
273	Plug washer		EN 1.4301 (AISI 304)	EN 1.4401 (AISI 316)		
273-1	Plug washer		EN 1.4301 (AISI 304)	EN 1.4401 (AISI 316)		
274-1	C-Type snap ring		EN 1.4301 (AISI 304)	EN 1.4401 (AISI 316)	D.26	UNI 7435
274-2	C-Type snap ring	EVM64 1-1	Carbon steel TC80		D.50	UNI 7435
		EVM64 1-0 to 2-2			D.65	UNI 7435
		EVM64 2-0, 3-3			D.75	UNI 7535
274-3	C-Type snap ring		Carbon steel TC80		D.110	UNI 7437
613	Flange		Carbon steel			

EBARA
EBARA Pumps Europe
EBARA Pumps Europe reserves the right to make changes without prior notice

QUANTITY FOR MODEL EVM(L)64

Pump Type	N°																												
	5-2	11	21	21-1	39-1	43-2	43-3	43-4	44-1	52-1	53	56	70-1	81	107	120-4	120-5	120-7	128-3	129	135-3	135-4	136	140	140-1	140-2	150	274-2	274-3
EVM(L)64 1-1F6/7.5	1	/	/	1	/	/	/	/	/	/	1	1	/	1	1	/	/	/	/	/	/	/	/	1	/	/	1	1	1
EVM(L)64 1-0F6/11	1	1	1	/	1	/	/	/	/	/	1	1	1	1	1	4	4	3	4	/	4	3	/	/	1	1	1	1	/
EVM(L)64 2-2F6/15	2	1	/	2	1	1	/	/	/	/	2	1	1	2	2	4	4	3	4	/	4	3	/	/	1	1	1	1	/
EVM(L)64 2-1F6/18.5	2	1	1	1	1	1	/	/	/	/	2	1	1	2	2	4	4	3	4	/	4	3	/	/	1	1	1	1	/
EVM(L)64 2-0F6/22	2	1	2	/	1	1	/	/	/	/	2	1	1	2	2	4	4	3	4	/	4	3	/	/	1	1	1	1	/
EVM(L)64 3-3F6/22	3	1	/	3	1	2	/	/	/	/	3	1	1	3	3	4	4	3	4	/	4	3	/	/	1	1	1	1	/
EVM(L)64 3-2F6/30	3	1	1	2	1	2	/	/	/	/	3	1	1	3	3	4	4	3	4	1	4	3	1	/	1	1	/	/	/
EVM(L)64 3-1F6/30	3	1	2	1	1	2	/	/	/	/	3	1	1	3	3	4	4	3	4	1	4	3	1	/	1	1	/	/	/
EVM(L)64 3-0F6/30	3	1	3	/	1	2	/	/	/	/	3	1	1	3	3	4	4	3	4	1	4	3	1	/	1	1	/	/	/
EVM(L)64 4-3F6/30	4	1	1	3	1	2	1	1	1	1	4	1	1	3	4	4	4	3	4	1	4	3	1	/	1	1	/	/	/
EVM(L)64 4-2F6/37	4	1	2	2	1	2	1	1	1	1	4	1	1	3	4	4	4	3	4	1	4	3	1	/	1	1	/	/	/
EVM(L)64 4-1F6/37	4	1	3	1	1	2	1	1	1	1	4	1	1	3	4	4	4	3	4	1	4	3	1	/	1	1	/	/	/

BEARINGS EVM(L)64

Pump Type	N°
	56
EVM(L)64 1-1F6/7.5	6310 ZZ C3
EVM(L)64 1-0F6/11	6313 ZZ C3
EVM(L)64 2-2F6/15	6313 ZZ C3
EVM(L)64 2-1F6/18.5	6313 ZZ C3
EVM(L)64 2-0F6/22	6315 ZZ C3
EVM(L)64 3-3F6/22	6315 ZZ C3
EVM(L)64 3-2F6/30	6315 ZZDT C3*
EVM(L)64 3-1F6/30	6315 ZZDT C3*
EVM(L)64 3-0F6/30	6315 ZZDT C3*
EVM(L)64 4-3F6/30	6315 ZZDT C3*
EVM(L)64 4-2F6/37	6315 ZZDT C3*
EVM(L)64 4-1F6/37	6315 ZZDT C3*

*DT=Two single row deep groove ball bearings matched for paired mounting in a tandem arrangement.

EBARA Pumps Europe reserves the right to make changes without prior notice

PERFORMANCE CURVE
EVMG64

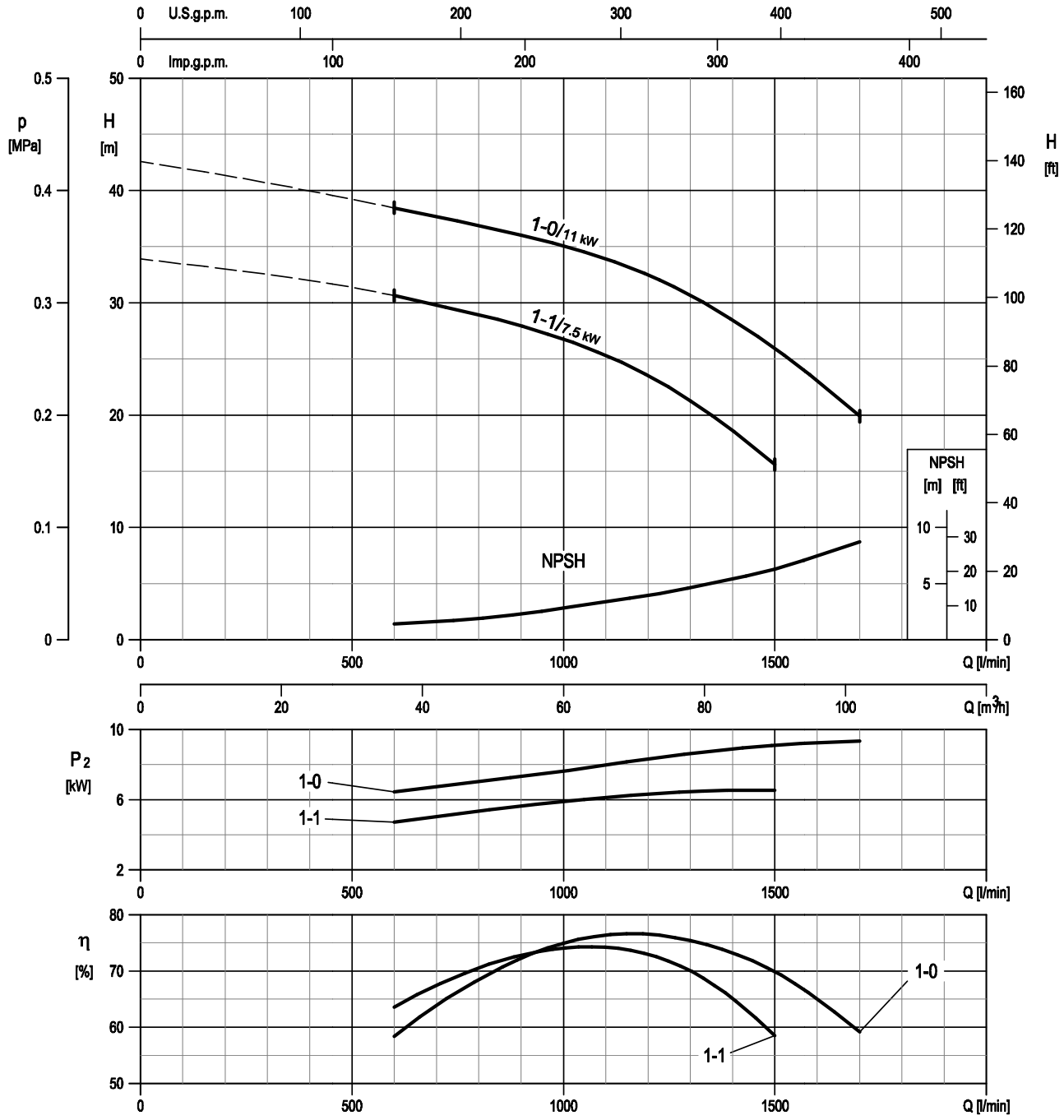

Rotation speed ≈3500 min-1
Test standard: ISO 9906:2012 - Grade 3B

EBARA Pumps Europe reserves the right to make changes without prior notice

PERFORMANCE CURVE
EVMG64

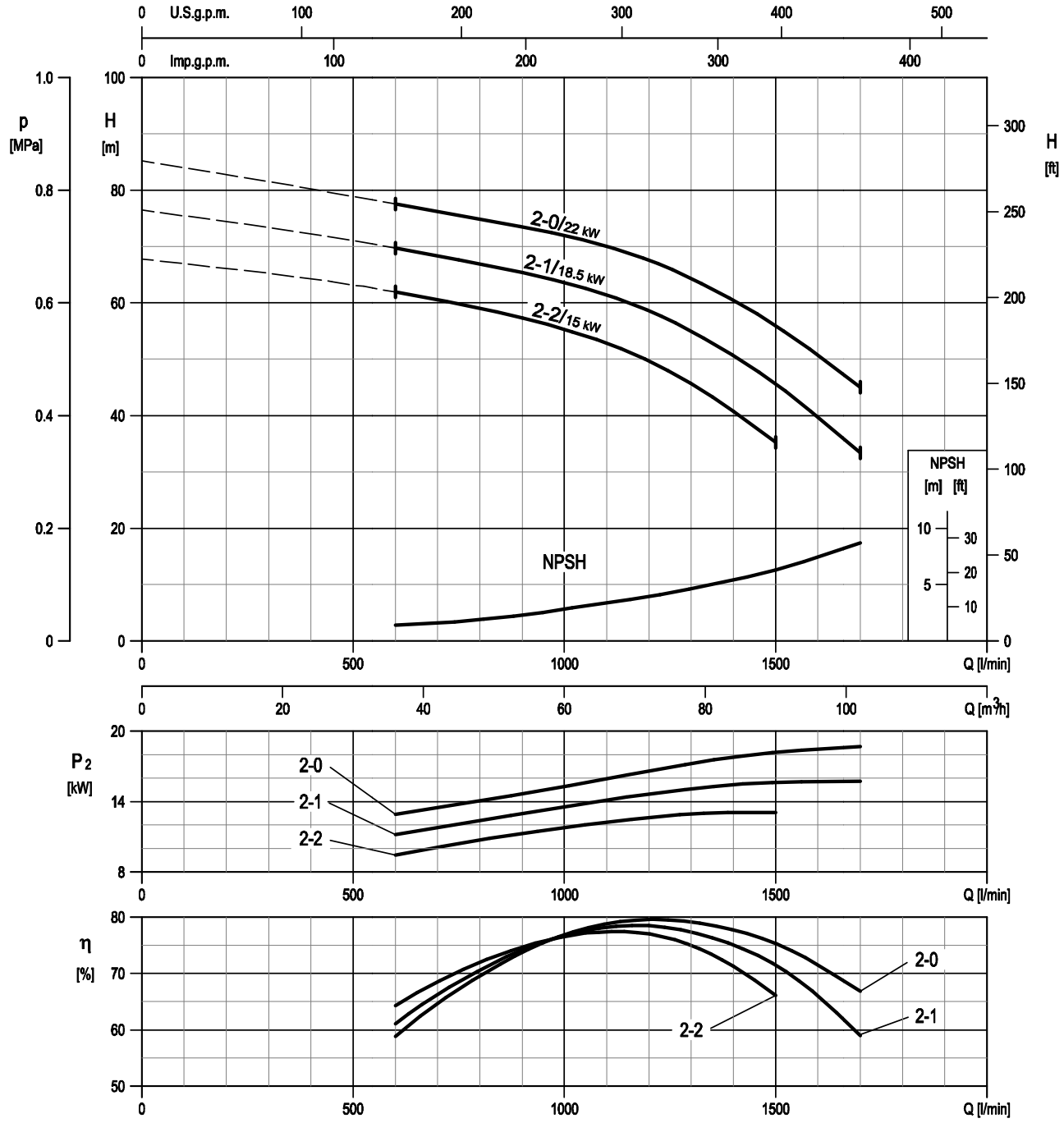

Rotation speed ≈3500 min-1
Test standard: ISO 9906:2012 - Grade 3B

EBARA Pumps Europe reserves the right to make changes without prior notice

PERFORMANCE CURVE
EVMG64

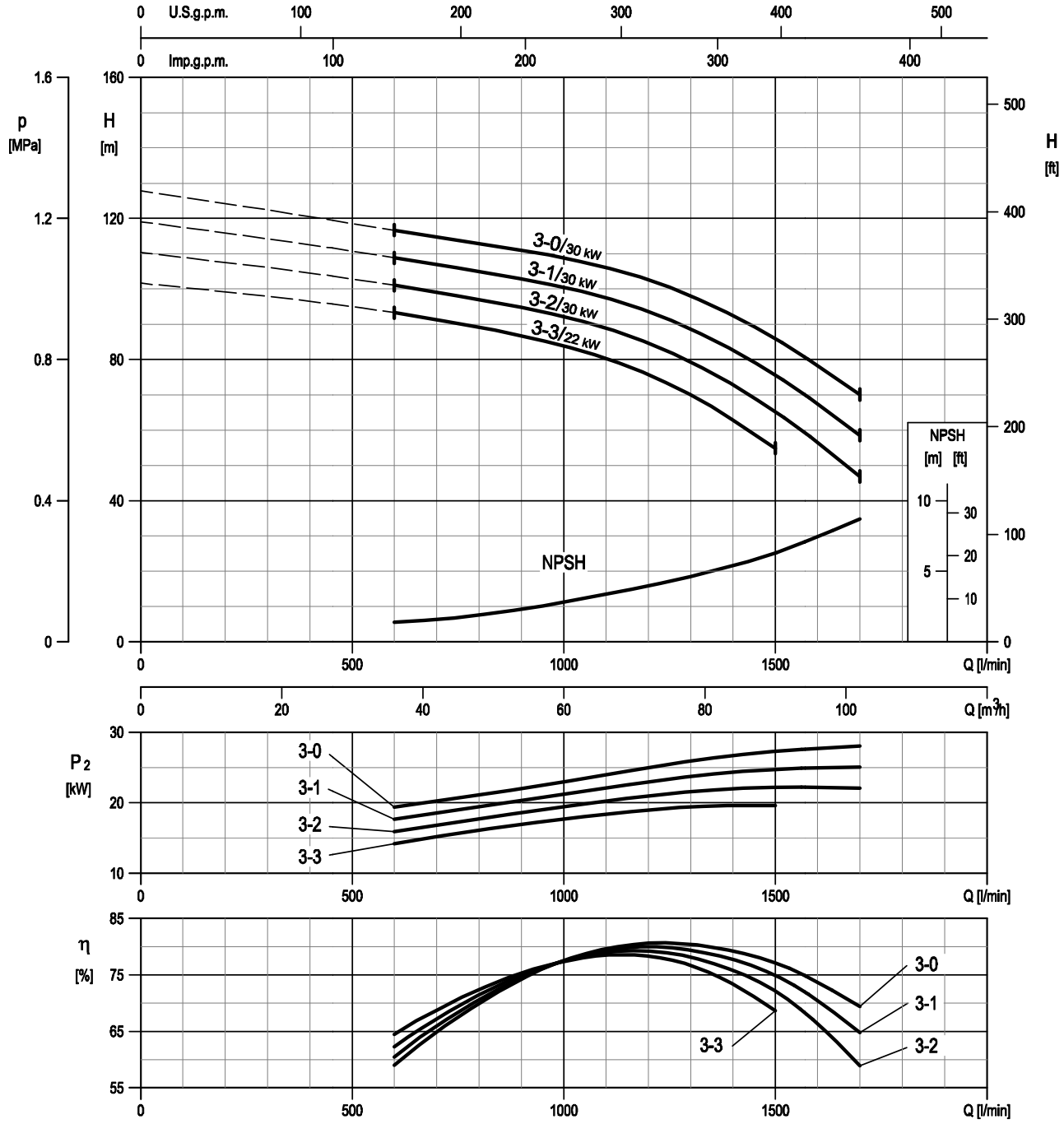

Rotation speed ≈3500 min-1
Test standard: ISO 9906:2012 - Grade 3B

EBARA Pumps Europe reserves the right to make changes without prior notice

PERFORMANCE CURVE
EVMG64

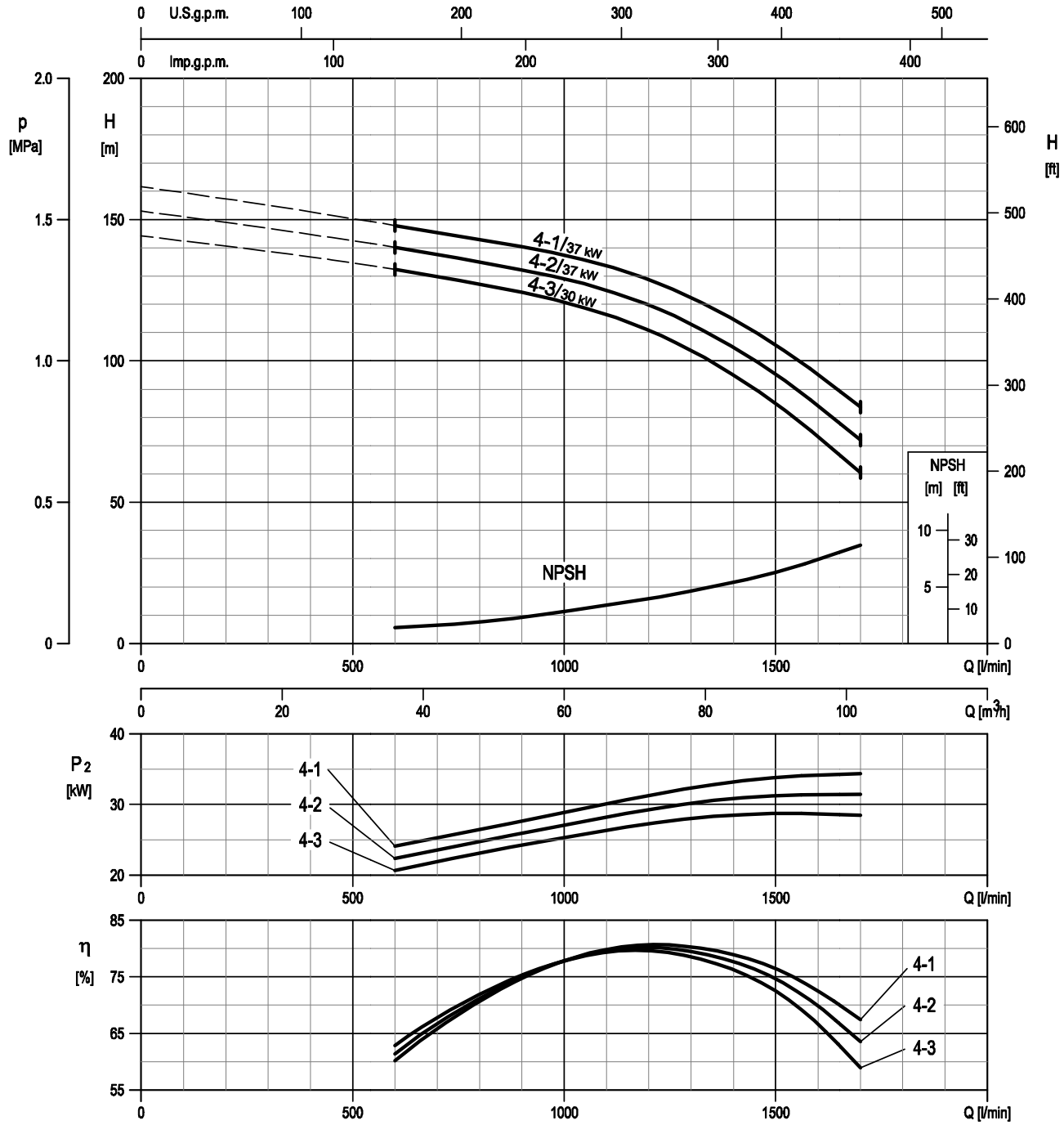

Rotation speed ≈3500 min-1
Test standard: ISO 9906:2012 - Grade 3B

EBARA Pumps Europe

EBARA Pumps Europe reserves the right to make changes without prior notice

TECHNICAL DATA
EVMG64

Dimensional sketch

Round flange (F) - DN100

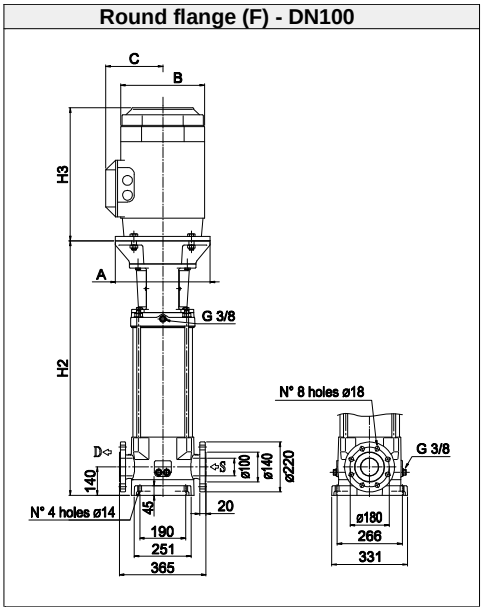

Dimensions [mm] and Weights [Kg]

Pump Type	Pmax [MPa]	Motor kW	Motor Size	Motor A	Motor 3 ~ B	Motor 3 ~ C	Motor 3 ~ H3	Round flange (F) H2	Round flange (F) Weight Pump	Round flange (F) Weight Pump + Motor
EVMG64 1-1F6/7.5	1.6	7.5	132 S	300	225	160	350	546	70	110.4
EVMG64 1-0F6/11	1.6	11	160 M	350	248	194	476	677	77	139.5
EVMG64 2-2F6/15	1.6	15	160 M	350	317	238	498	749	81	169.9
EVMG64 2-1F6/18.5	1.6	18.5	160 L	350	317	238	542	749	94	198
EVMG64 2-0F6/22	1.6	22	180 M	350	360	268	577	749	94	257
EVMG64 3-3F6/22	1.6	22	180 M	350	360	268	577	821	99	262
EVMG64 3-2F6/30	1.6	30	200 L	400	399	300	658	837	99	327
EVMG64 3-1F6/30	1.6	30	200 L	400	399	300	658	837	99	327
EVMG64 3-0F6/30	1.6	30	200 L	400	399	300	658	837	99	327
EVMG64 4-3F6/30	1.6	30	200 L	400	399	300	658	909	108	336
EVMG64 4-2F6/37	1.6	37	200 L	400	399	300	658	909	108	350
EVMG64 4-1F6/37	1.6	37	200 L	400	399	300	658	909	108	350

1.6 MPa=16 bar ; 2.5 MPa=25 bar

EBARA Pumps Europe reserves the right to make changes without prior notice

SECTIONAL VIEW
EVMG64

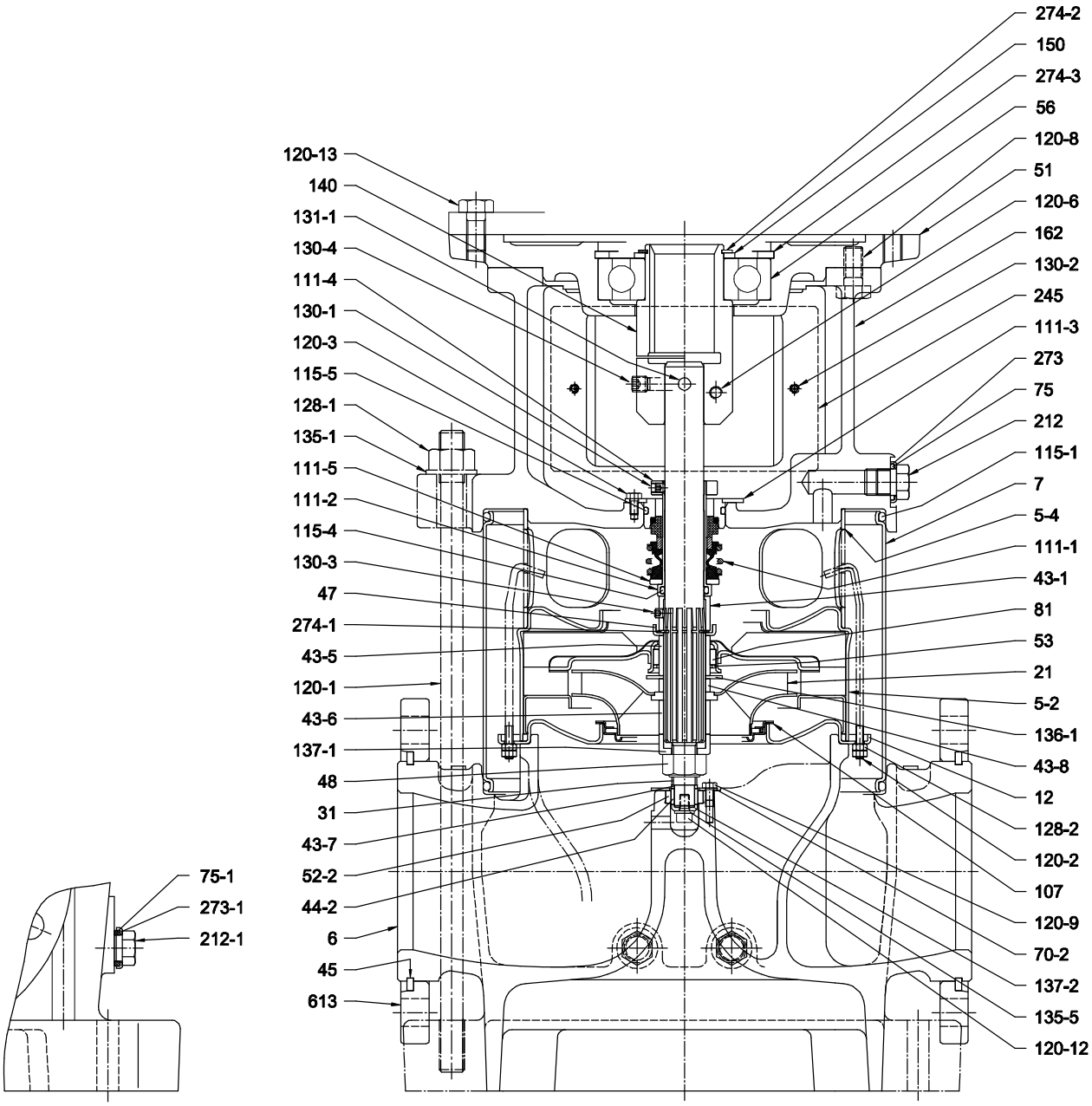

Pump with single ball bearing

EBARA Pumps Europe

EBARA Pumps Europe reserves the right to make changes without prior notice

SECTIONAL VIEW
EVMG64

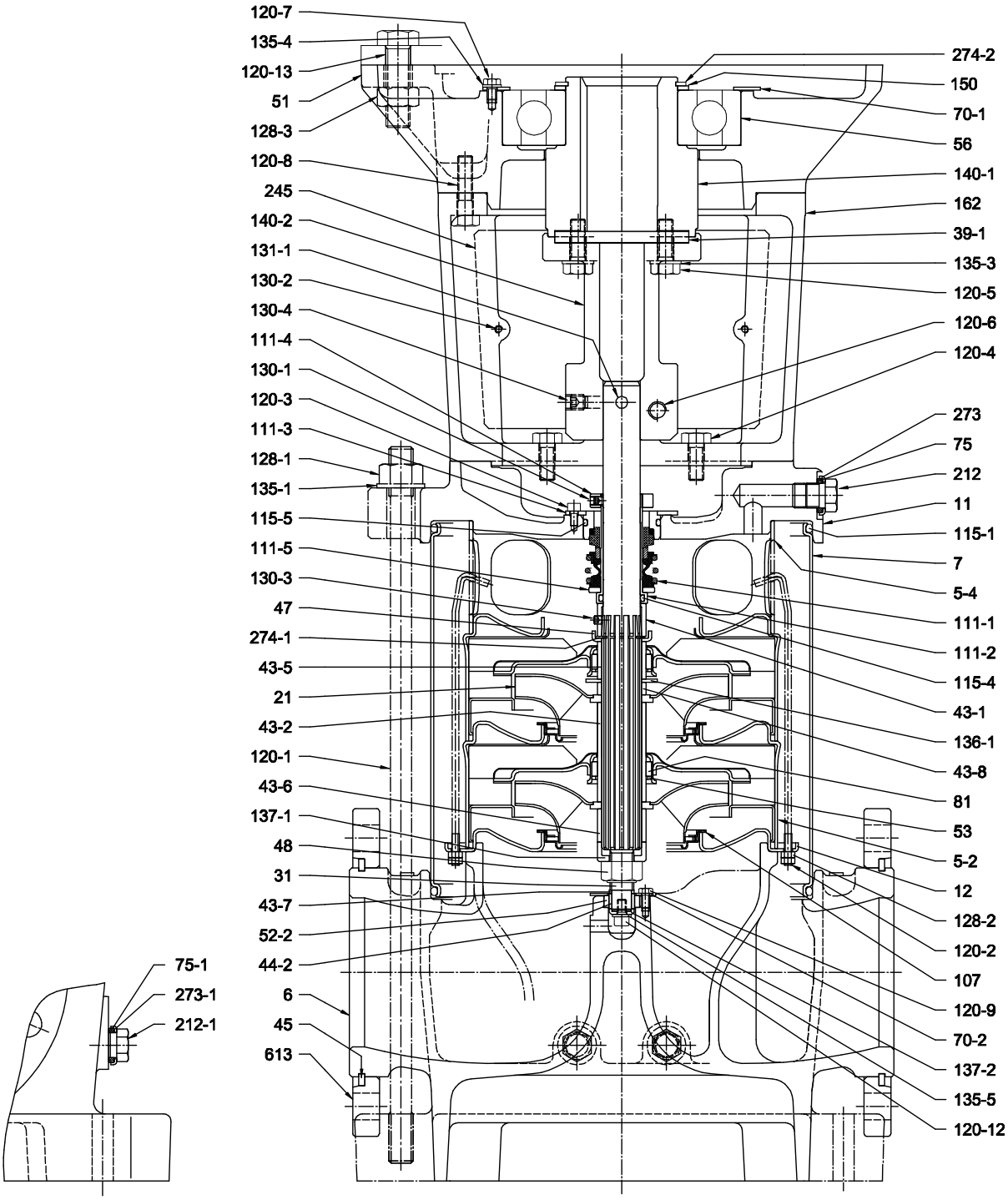

Pump with single ball bearing

EBARA Pumps Europe
EBARA Pumps Europe reserves the right to make changes without prior notice

SECTIONAL VIEW
EVMG64

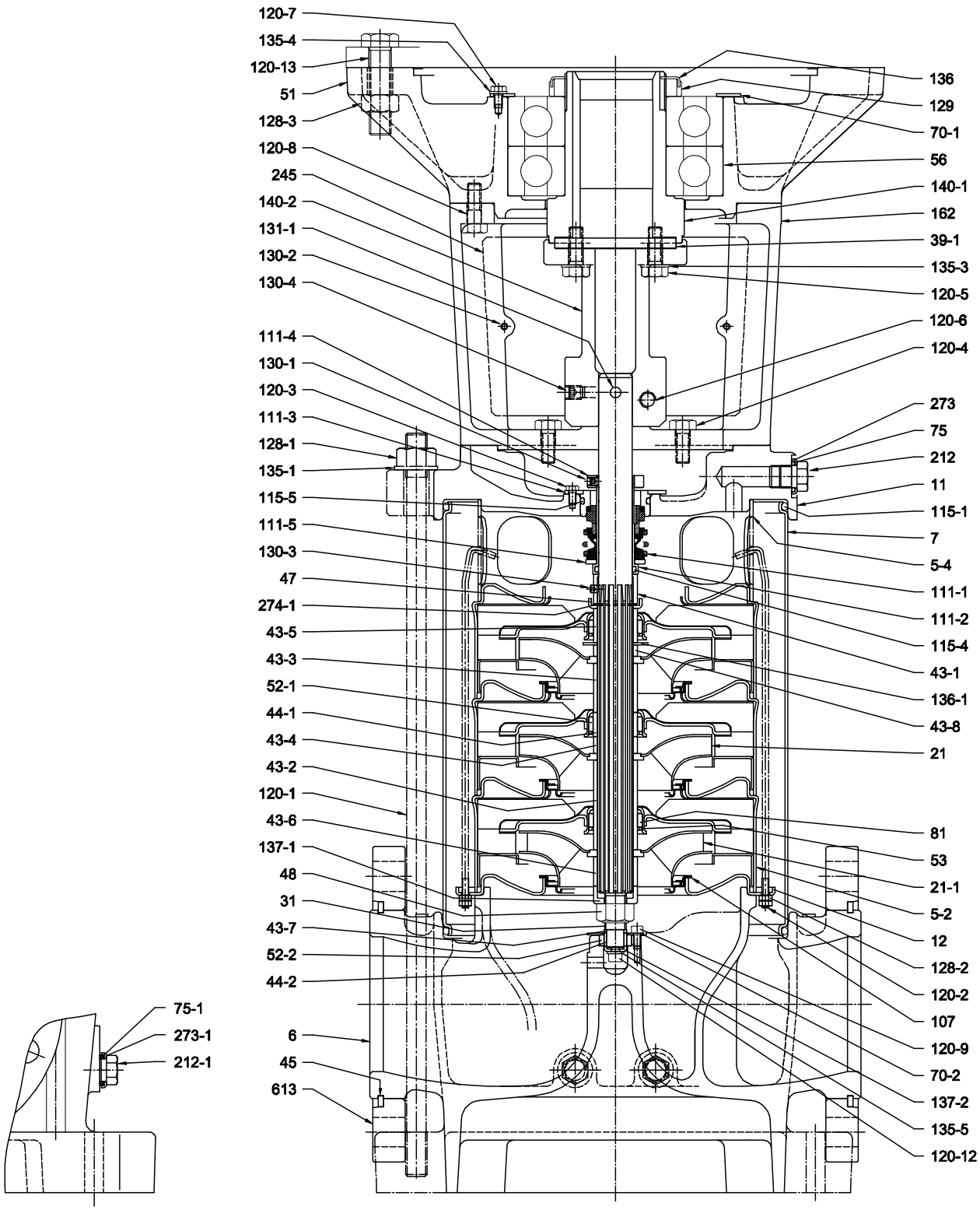

Pump with double ball bearing

EBARA Pumps Europe reserves the right to make changes without prior notice

SECTIONAL TABLE
EVMG64

N°	PART NAME		MATERIAL EVMG	DIMENSIONS	STANDARD
5-2	Intermediate casing		EN 1.4301 (AISI 304)		
5-4	Discharge casing		EN 1.4301 (AISI 304)		
6	Bottom casing		Cast iron EN GJL-250- EN 1561		
7	Outer casing		EN 1.4301 (AISI 304)		
11	Casing cover		Cast iron EN GJL-250- EN 1561		
12	Suction cover		EN 1.4301 (AISI 304)		
21	Impeller		EN 1.4301 (AISI 304)		
21-1	Reduced impeller				
31	Shaft		EN 1.4401 (AISI 316)		
39-1	Key		Carbon steel	12X8X90	UNI 6604
43-1	Shaft sleeve (mechanical seal)		EN 1.4301 (AISI 304)		
43-2	Shaft sleeve (intermediate)		EN 1.4301 (AISI 304)		
43-3	Shaft sleeve (bearing)		EN 1.4301 (AISI 304)		
43-4	Shaft sleeve (adjustment)		EN 1.4301 (AISI 304)		
43-5	Shaft sleeve (last stage)		EN 1.4301 (AISI 304)		
43-6	Shaft sleeve (adjustment)		EN 1.4301 (AISI 304)		
43-7	Shaft sleeve (bottom bearing)		EN 1.4301 (AISI 304)		
43-8	Shaft sleeve (discharge/lower)		EN 1.4301 (AISI 304)		
44-1	Shaft sleeve bearing		Tungsten carbide		
44-2	Bearing sleeve		Tungsten carbide		
45	Flange holder		EN 1.402 (AISI 420)		
47	Ring holder		EN 1.4301 (AISI 304)		
48	Impeller nut		A2-70 UNI 7323 with inox insert	M16	
51	Motor adapter		Cast iron EN-GJL-200-EN 1561		
52-1	Bearing		Tungsten carbide		
52-2	Bearing		Tungsten carbide		
53	Bush holder		EN 1.4301 (AISI 304)		
56	Ball bearing		see table page 381		
70-1	Ring for bearing		EN 1.4301 (AISI 304)		
70-2	Ring for bearing		EN 1.4301 (AISI 304)		
75	O-Ring (plug)		EPDM		
75-1	O-Ring (plug)		EPDM		
81	Bush		PTFE		
107	Liner ring		PTFE / EN 1.4401 (AISI 316)		
111-1	Mechanical seal		Silicon carbide / Carbon /FPM		
111-2	Mechanical seal cartridge		EN 1.4301 (AISI 304)		
111-3	Mechanical seal seat		EN 1.4301 (AISI 304)		
111-4	Seal holder		Brass OT 58 UNI 5705		
111-5	Adjusting ring		EN 1.4301 (AISI 304)		
115-1	O-Ring (outer casing)		EPDM	D.240,66X5,34	
115-4	O-Ring (cartridge sleeve)		EPDM	D.24,99X3,53	
115-5	O-Ring (seal cover)		EPDM	D.44,04X3,53	
120-1	Tie-rod		Galvanized steel 6.8 Strenght class ISO 898/1		
120-2	Tie-rod		EN 1.4301 (AISI 304)		
120-3	Screw (mechanical seal)		A2-70 UNI 7323	M5X10	UNI 5931
120-4	Screw (casing cover)		Galvanized steel 8.8 Strenght class ISO 898/1	M10X25	UNI 5739
120-5	Screw for coupling		Galvanized steel 8.8 Strenght class ISO 898/1	M10X30	UNI 5739
120-6	Screw for coupling	EVM64 1-1	Galvanized steel 8.8 Strenght class ISO 898/1	M 8X20	UNI 5931
		EVM64 1-0 and higher		M12X30	UNI 5931
120-7	Screw		Galvanized steel	M 6X10	UNI 5739
120-8	Screw	EVM 64 1-0 to 4-3	Galvanized steel 8.8 Strenght class ISO 898/1	M10X30	UNI 5739
		EVM64 1-1		M12X35	UNI 5739
120-9	Screw	EVML	EN 1.4301 (AISI 304)	M5X8	UNI 5737
		EVM, EVMG		M5X8	UNI 5739
120-12	Screw		EN 1.4301 (AISI 304)	M 6X20	UNI 5931
120-13	Screw	EVM 64 1-1	Galvanized steel 8.8 Strenght class ISO 898/1	M12X30	UNI 5739
		EVM 64 4-1, 4-2		M16X55	UNI 5737
		EVM 64 1-0 to 4-3		M16X65	UNI 5739
128-1	Nut for tie rod		Galvanized steel	M16	UNI 5588
128-2	Nut		Carbon steel	M5	UNI 5588
128-3	Nut		Galvanized steel	M16	UNI 5588
129	Lock nut		Carbon steel		
130-1	Set screw		A2-70 UNI 7323	M6X8	UNI 5923
130-2	Screw for coupling guard		A2-70 UNI 7323	M5X6	UNI 7687
130-3	Set screw		EN 1.4301 (AISI 304)	M6X6	UNI 5923
130-4	Set screw		Galvanized steel	M10X10	UNI 5923
131-1	Pin for shaft		Carbon steel		
131-2	Elastic pin		-	6X25	UNI 6873
135-1	Washer		Galvanized steel	17x30x3	UNI 6592
135-3	Washer		Galvanized steel	10,5X17,5X2,2	UNI 1751
135-4	Washer		Plated carbon steel	6,4	UNI 1751
135-5	Washer		EN 1.4301 (AISI 304)	D.6	
136	Bearing washer		Carbon steel		
136-1	Stopper ring		EN 1.4301 (AISI 304)		
137-1	Impeller spacer		EN 1.4301 (AISI 304)		
137-2	Shaft spacer		EN 1.4301 (AISI 304)		
140	Coupling		Brass OT 58 UNI 5705		
140-1	Motor coupling		Carbon steel		
140-2	Coupling (pump side)		Carbon steel		
150	Spacer		Carbon steel		
160	Base		-		
162	Motor bracket		Cast iron EN-GJL-200-EN 1561		
212	Plug		EN 1.4301 (AISI 304)		
212-1	Plug		EN 1.4301 (AISI 304)		
245	Coupling guard		EN 1.4301 (AISI 304)		
273	Plug washer		EN 1.4301 (AISI 304)		
273-1	Plug washer		EN 1.4301 (AISI 304)		
274-1	C-Type snap ring		EN 1.4301 (AISI 304)	D.26	UNI 7435
274-2	C-Type snap ring	EVM64 1-1	Carbon steel TC80	D.50	UNI 7435
		EVM64 1-0 to 2-2		D.65	UNI 7435
		EVM64 2-0, 3-3		D.75	UNI 7535
274-3	C-Type snap ring		Carbon steel TC80	D.110	UNI 7437
613	Flange		Carbon steel		

EBARA Pumps Europe reserves the right to make changes without prior notice

QUANTITY FOR MODEL EVMG64

Pump Type	N°																												
	5-2	11	21	21-1	39-1	43-2	43-3	43-4	44-1	52-1	53	56	70-1	81	107	120-4	120-5	120-7	128-3	129	135-3	135-4	136	140	140-1	140-2	150	274-2	274-3
EVMG64 1-1F6/7.5	1	/	/	1	/	/	/	/	/	/	1	1	/	1	1	/	/	/	/	/	/	/	/	1	/	/	1	1	1
EVMG64 1-0F6/11	1	1	1	/	1	/	/	/	/	/	1	1	1	1	1	4	4	3	4	/	4	3	/	/	1	1	1	1	/
EVMG64 2-2F6/15	2	1	/	2	1	1	/	/	/	/	2	1	1	2	2	4	4	3	4	/	4	3	/	/	1	1	1	1	/
EVMG64 2-1F6/18.5	2	1	1	1	1	1	/	/	/	/	2	1	1	2	2	4	4	3	4	/	4	3	/	/	1	1	1	1	/
EVMG64 2-0F6/22	2	1	2	/	1	1	/	/	/	/	2	1	1	2	2	4	4	3	4	/	4	3	/	/	1	1	1	1	/
EVMG64 3-3F6/22	3	1	/	3	1	2	/	/	/	/	3	1	1	3	3	4	4	3	4	/	4	3	/	/	1	1	1	1	/
EVMG64 3-2F6/30	3	1	1	2	1	2	/	/	/	/	3	1	1	3	3	4	4	3	4	1	4	3	1	/	1	1	/	/	/
EVMG64 3-1F6/30	3	1	2	1	1	2	/	/	/	/	3	1	1	3	3	4	4	3	4	1	4	3	1	/	1	1	/	/	/
EVMG64 3-0F6/30	3	1	3	/	1	2	/	/	/	/	3	1	1	3	3	4	4	3	4	1	4	3	1	/	1	1	/	/	/
EVMG64 4-3F6/30	4	1	1	3	1	2	1	1	1	1	4	1	1	3	4	4	4	3	4	1	4	3	1	/	1	1	/	/	/
EVMG64 4-2F6/37	4	1	2	2	1	2	1	1	1	1	4	1	1	3	4	4	4	3	4	1	4	3	1	/	1	1	/	/	/
EVMG64 4-1F6/37	4	1	3	1	1	2	1	1	1	1	4	1	1	3	4	4	4	3	4	1	4	3	1	/	1	1	/	/	/

BEARINGS EVMG64

Pump Type	N° 56
EVMG64 1-1F6/7.5	6310 ZZ C3
EVMG64 1-0F6/11	6313 ZZ C3
EVMG64 2-2F6/15	6313 ZZ C3
EVMG64 2-1F6/18.5	6313 ZZ C3
EVMG64 2-0F6/22	6315 ZZ C3
EVMG64 3-3F6/22	6315 ZZ C3
EVMG64 3-2F6/30	6315 ZZDT C3*
EVMG64 3-1F6/30	6315 ZZDT C3*
EVMG64 3-0F6/30	6315 ZZDT C3*
EVMG64 4-3F6/30	6315 ZZDT C3*
EVMG64 4-2F6/37	6315 ZZDT C3*
EVMG64 4-1F6/37	6315 ZZDT C3*

*DT=Two single row deep groove ball bearings matched for paired mounting in a tandem arrangement.

EBARA Pumps Europe reserves the right to make changes without prior notice

PACKING DRAWING
EVM(.)32-45-64

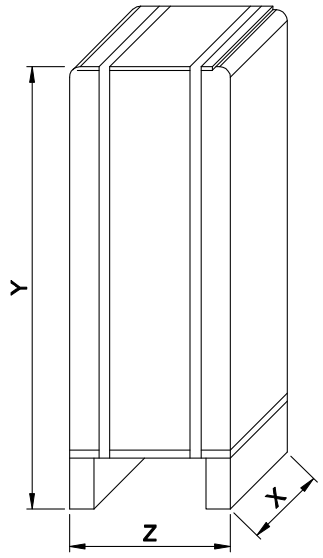

TYPE 1

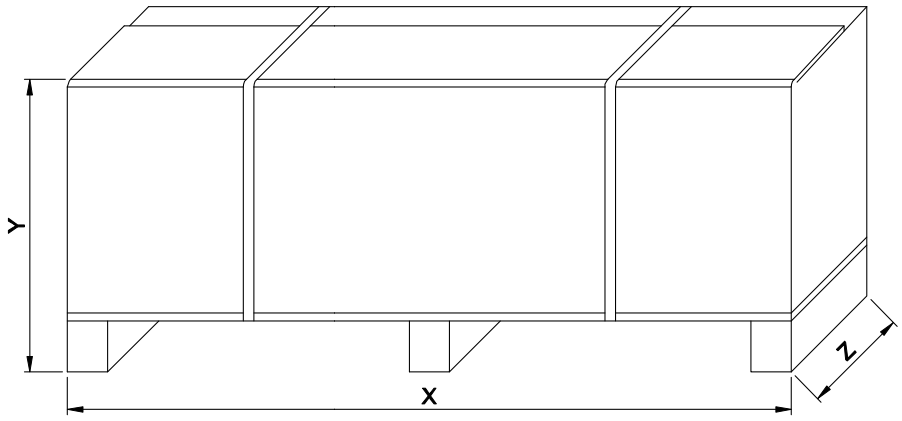

TYPE 2

EBARA Pumps Europe reserves the right to make changes without prior notice

PACKING DATA
EVM(.)32-45-64

	Pump type	Pumps						Pumps with motor ~3					
		Packing [mm]			Weight + Packing [kg]		Pack Type	Packing [mm]			Weight + Packing [kg]		Pack Type
		X	Z	Y	EVM(G)	EVM(L)		X	Z	Y	EVM(G)	EVM(L)	
32	EVM(.)32 1-0F6/4.0	400	780	400	61	66	1	400	1047	400	97	102	1
	EVM(.)32 2-2F6/5.5	400	780	400	65	71	1	400	1047	400	106	111	1
	EVM(.)32 2-0F6/7.5	400	780	400	68	73	1	400	1047	400	109	115	1
	EVM(.)32 3-3F6/7.5	400	780	400	72	79	1	400	1047	400	113	121	1
	EVM(.)32 3-0F6/11	1047	400	400	84	91	1	500	545	1350	154	161	2
	EVM(.)32 4-3F6/11	1047	400	400	87	94	1	500	545	1350	157	164	2
	EVM(.)32 4-0F6/15	1047	400	400	87	94	1	500	545	1350	182	189	2
	EVM(.)32 5-3F6/15	1047	400	400	94	103	1	500	540	1540	189	198	2
	EVM(.)32 5-2F6/15	1047	400	400	94	103	1	500	540	1540	189	198	2
	EVM(.)32 5-0F6/18.5	1047	400	400	97	103	1	500	540	1540	199	208	2
	EVM(.)32 6-3F6/18.5	1047	400	400	97	106	1	500	540	1540	202	211	2
	EVM(.)32 6-0F6/22	1047	400	400	97	106	1	610	593	1750	249	258	2
	EVM(.)32 7-3F6/22	1047	400	400	110	119	1	610	593	1750	262	271	2
	EVM(.)32 7-2F6/22	1047	400	400	110	119	1	610	593	1750	262	271	2
	EVM(.)32 7-0F6/30	1147	480	480	116	125	1	610	593	1750	315	324	2
	EVM(.)32 8-3F6/30	1147	480	480	115	125	1	610	593	1750	314	324	2
	EVM(.)32 8-0F6/30	1147	480	480	115	125	1	610	593	1750	314	324	2
	EVM(.)32 9-3F6/30	1297	480	480	125	135	1	610	593	1750	317	327	2
	EVM(.)32 9-0F6/30	1297	480	480	125	135	1	610	593	1750	317	327	2
	EVM(.)32 10-4F6/30	1297	480	480	124	135	1	635	607	2130	377	388	2
45	EVM(.)45 1-1F6/5.5	400	780	400	62	69	1	400	1047	400	102	95	1
	EVM(.)45 1-0F6/7.5	400	780	400	64	71	1	400	1047	400	106	109	1
	EVM(.)45 2-2F6/11	1047	400	400	68	75	1	500	545	1350	138	134	2
	EVM(.)45 2-1F6/11	1047	400	400	68	75	1	500	545	1350	138	134	2
	EVM(.)45 2-0F6/15	1047	400	400	68	75	1	500	545	1350	163	170	2
	EVM(.)45 3-3F6/15	1047	400	400	72	81	1	500	540	1540	167	176	2
	EVM(.)45 3-2F6/15	1047	400	400	72	81	1	500	540	1540	167	176	2
	EVM(.)45 3-1F6/18.5	1047	400	400	72	81	1	500	540	1540	177	186	2
	EVM(.)45 3-0F6/22	1047	400	400	82	91	1	500	540	1540	227	236	2
	EVM(.)45 4-3F6/18.5	1047	400	400	74	84	1	500	540	1540	179	189	2
	EVM(.)45 4-2F6/22	1047	400	400	84	94	1	610	593	1750	236	146	2
	EVM(.)45 4-1F6/30	1147	480	480	87	97	1	610	593	1750	286	296	2
	EVM(.)45 4-0F6/30	1147	480	480	87	97	1	610	593	1750	286	296	2
	EVM(.)45 5-3F6/30	1147	480	480	104	116	1	610	593	1750	303	315	2
	EVM(.)45 5-2F6/30	1147	480	480	104	116	1	610	593	1750	303	315	2
	EVM(.)45 5-1F6/30	1147	480	480	104	116	1	610	593	1750	303	315	2
	EVM(.)45 5-0F6/37	1147	480	480	104	116	1	610	593	1750	317	329	2
	EVM(.)45 6-3F6/37	1297	480	480	103	116	1	635	607	2130	370	383	2
	EVM(.)45 6-2F6/37	1297	480	480	103	116	1	635	607	2130	370	383	2
	EVM(.)45 6-1F6/37	1297	480	480	103	116	1	635	607	2130	370	383	2
64	EVM(.)64 1-1F6/7.5	400	780	400	79	86	1	400	1047	400	121	127	1
	EVM(.)64 1-0F6/11	1047	400	400	77	84	1	500	545	1350	147	154	2
	EVM(.)64 2-2F6/15	1047	400	400	91	98	1	500	545	1350	186	194	2
	EVM(.)64 2-1F6/18.5	1047	400	400	92	100	1	500	540	1540	197	206	2
	EVM(.)64 2-0F6/22	1047	400	400	102	110	1	610	593	1750	254	262	2
	EVM(.)64 3-3F6/22	1047	400	400	107	116	1	610	593	1750	259	268	2
	EVM(.)64 3-2F6/30	1147	480	480	110	119	1	610	593	1750	309	318	2
	EVM(.)64 3-1F6/30	1147	480	480	110	119	1	610	593	1750	309	318	2
	EVM(.)64 3-0F6/30	1147	480	480	110	119	1	610	593	1750	309	318	2
	EVM(.)64 4-3F6/30	1147	480	480	117	128	1	610	593	1750	316	327	2
	EVM(.)64 4-2F6/37	1147	480	480	117	128	1	610	593	1750	330	341	2
	EVM(.)64 4-1F6/37	1147	480	480	117	128	1	610	593	1750	330	341	2

EBARA Pumps Europe reserves the right to make changes without prior notice

MOTOR

EBARA Pumps Europe reserves the right to make changes without prior notice

VERTICAL MULTISTAGE PUMPS

GENERAL

Various regulatory authorities in many countries have introduced or are planning legislation to encourage the manufacture and use of higher efficiency motors, as part of a concerted effort worldwide to reduce energy consumption.
IEC 60034-30 defines new efficiency classes for motors and harmonizes the currently different requirements for induction motor efficiency levels around the world.

		MOTOR EVMS	MOTOR EVM
Power Source	Frequency	60 Hz	60 Hz
	Phase	Three Phase	Three Phase
	Rotation speed	≈ 3500 min-1	≈ 3500 min-1
	Power rating	0.37 ÷ 18.5 kW 0.5 ÷ 25 HP	4.0 ÷ 37 kW 5.5 ÷ 50 HP
	Voltage	220/380 ± 10% V (up to 4kW) 265/460 ± 10% V (up to 4kW) 380/660 ± 10% V (above 5.5 kW) 460 ± 10% V (above 5.5 kW)	220/380 ± 10% V (up to 4kW) 265/460 ± 10% V (up to 4kW) 380/660 ± 10% V (above 5.5 kW) 460 ± 10% V (above 5.5 kW)
Type	Type	Electric - TEFC	Electric - TEFC
	Efficiency Level	- from 0.37 up to 0.55 kW IE2 from 0.75 up to 4.0 kW (220-380V / 265-460V) IE2 above 5.5 kW (380-660V / 460V)	IE2 to 4.0 kW (220-380V / 265-460V) IE2 above 5.5 kW (380-660V / 460V)
	No° of poles	2	2
	Protection degree	IP 55	IP 55
	Insulation Class	F (temperature rise class B)	F (temperature rise class B)
Others	Thermal Protection	PTC is available for the above 1.5 kW	PTC
	Casing Material	Aluminium	Aluminium
	Flange mount (IEC motor)	IM B14 (up to 4 kW) IM B5 (above 5.5 kW)	IM B14 (up to 4 kW) IM B5 (above 5.5 kW)

NOISE DATA

Coupling Flange Size (MEC)	Power [kW]	Power [HP]	Noise LpA - dB(A) *
71	0.37	0.5	<70
	0.55	0.75	
80	0.75	1	<70
	1.1	1.5	
90 S	1.5	2	<70
90 L	2.2	3	
100 L	3.0	4	71
112 M	4.0	5.5	73
132 S	5.5	7.5	77
	7.5	10	
160 M	11	15	79
	15	20	
160 L	18.5	25	
180 M	22	30	82
200 L	30	40	83
	37	50	

EBARA Pumps Europe reserves the right to make changes without prior notice

TECHNICAL MOTOR DATA
EVMS 1-3-5-10-15-20

- Three Phase Motor at 60Hz, 2 poles

Motor			Efficiency	Load efficency and power-factor				Full load current [A]				Locked rotor current [A]			
Coupling Flange Size (MEC)	Power [kW]	Power [HP]		50%	η % 75%	100%	cos–ϕ 100%	220V	265V	380V	460V	220 V	265 V	380V	460V
71	0.37	0.5	-	-	-	67.7	0.72	2.1	1.7	1.2	1	8.8	9.6	5.1	5.6
71	0.55	0.75	-	-	-	72.4	0.72	2.9	2.4	1.7	1.4	12.7	15.1	7.3	8.7

IE2 Three Phase Motor at 60Hz, 2 poles

Motor			Efficiency	Load efficency and power-factor				Full load current [A]					Locked rotor current [A]				
Coupling Flange Size (MEC)	Power [kW]	Power [HP]		50%	η % 75%	100%	cos–ϕ 100%	220V	265V	380V	460V	660V	220V	265V	380V	460V	660V
80	0.75	1	IE2	82.9	84.2	82.6	0.74	3.1	2.6	1.8	1.5	1.0	32.9	27.3	19.0	15.8	11.0
80	1.1	1.5	IE2	76.1	80.4	82.5	0.75	4.3	3.6	2.5	2.1	1.5	43.8	36.4	25.5	21.2	14.8
90 S	1.5	2	IE2	80.1	83.2	85.3	0.84	5.7	4.7	3.3	2.7	1.9	46.4	38.5	26.6	22.1	15.4
90 L	2.2	3	IE2	86.0	86.4	86.5	0.82	8.2	6.8	4.7	3.9	2.7	77.8	64.6	44.7	37.1	25.9
100 L	3.0	4	IE2	86.4	87.8	87.5	0.90	10.0	8.3	5.8	4.8	3.3	114.2	94.8	65.9	54.7	38.1
112 M	4.0	5.5	IE2	86.4	87.8	87.5	0.80	15.1	12.5	8.7	7.2	5.0	180.4	149.8	104.2	86.5	60.3
132 S	5.5	7.5	IE2	85.0	88.6	88.5	0.87	-	-	10.7	8.9	6.2	-	-	131.3	109	76.0
132 S	7.5	10	IE2	87.8	89.5	89.7	0.88	-	-	14.5	12	8.4	-	-	171.0	142	99.0
160 M	11	15	IE2	88.6	90.4	90.7	0.89	-	-	20.7	17.2	12.0	-	-	198.8	165	115.1
160 M	15	20	IE2	90.9	92.3	91.8	0.89	-	-	28.1	23.3	16.2	-	-	272.2	226	157.6
160 L	18.5	25	IE2	90.3	92.0	91.6	0.88	-	-	34.7	28.8	20.1	-	-	409.5	340	237.1

EBARA Pumps Europe reserves the right to make changes without prior notice

TECHNICAL MOTOR DATA
EVM 32-45-64

IE2 Three Phase Motor at 60Hz, 2 poles

Motor				Load efficency and power-factor				Full load current [A]					Locked rotor current [A]				
Coupling Flange Size (MEC)	Power		Efficiency		η %		cos-ϕ										
	[kW]	[HP]		50%	75%	100%	100%	220V	265V	380V	460V	660V	220V	265V	380V	460V	660V
112 M	4.0	5.5	IE2	86.4	87.8	87.5	0.80	15.1	12.5	8.7	7.2	5.0	180.4	149.8	104.2	86.5	60.3
132 S	5.5	7.5	IE2	85.0	88.6	88.5	0.87	-	-	10.7	8.9	6.2	-	-	131.3	109	76.0
132 S	7.5	10	IE2	87.8	89.5	89.7	0.88	-	-	14.5	12	8	-	-	171.0	142	99.0
160 M	11	15	IE2	88.6	90.4	90.7	0.89	-	-	20.7	17.2	12.0	-	-	198.8	165	115.1
160 M	15	20	IE2	90.9	92.3	91.8	0.89	-	-	28.1	23.3	16.2	-	-	272.2	226	157.6
160 L	18.5	25	IE2	90.3	92.0	91.6	0.88	-	-	34.7	28.8	20.1	-	-	409.5	340	237.1
180 M	22	30	IE2	91.8	92.6	92.5	0.88	-	-	41.2	34	23.7	-	-	417.6	345	240.5
200 L	30	40	IE2	92.7	94.0	94.2	0.87	-	-	55.7	46	32.1	-	-	496.3	410	285.8
200 L	37	50	IE2	93.0	94.3	94.5	0.88	-	-	66.6	55	38.3	-	-	568.9	470	327.6

EBARA Pumps Europe reserves the right to make changes without prior notice

EBARA Pumps Europe reserves the right to make changes without prior notice

EBARA Pumps Europe reserves the right to make changes without prior notice

EBARA Pumps Europe reserves the right to make changes without prior notice

EBARA Pumps Europe reserves the right to make changes without prior notice

EBARA Pumps Europe S.p.A.
Via Pacinotti, 32
36040 Brendola (Vicenza), Italia
Tel. +39 0444 706811
Fax +39 0444 405811
ebara_pumps@ebaraeurope.com
www.ebaraeurope.com

EBARA Pumps Europe S.p.A. si riserva il diritto di apportare modifiche senza preavviso: tutte le specifiche potrebbero essere oggetto di modifiche

EBARA Corporation
11-1, Haneda Asahi-cho, Ohta-ku,
Tokyo 144-8510
Japan
Tel +81 3 6275 7598
Fax +81 3 5736 3193
www.ebara.com

cod. 479707057A 12/15